CONSTRUCTION PHASE HAZARD IDENTIFICATION
In accordance with the Construction (Design and Management) Regulations 2015

The hazard sign is a notification to other designers and contractors of foreseeable exceptional risks which could not be fully mitigated or removed by design and are beyond those which could be reasonably expected to be identified by a competent person as defined in the Construction (Design and Management) Regulations 2015.

DRAWING REVIEWED	YES
YES OF NO	
EXCEPTIONAL RISKS/MITIGATION none or see warning triangle	**General Site Wide Operational Risks - Landscape Works** 1. DEEP EXCAVATIONS - COLLAPSE 2. WORKING AT HEIGHT - FALLS/FALLING OBJECTS 3. BURIED SERVICES 4. POSSIBLE SOIL CONTAMINANTS

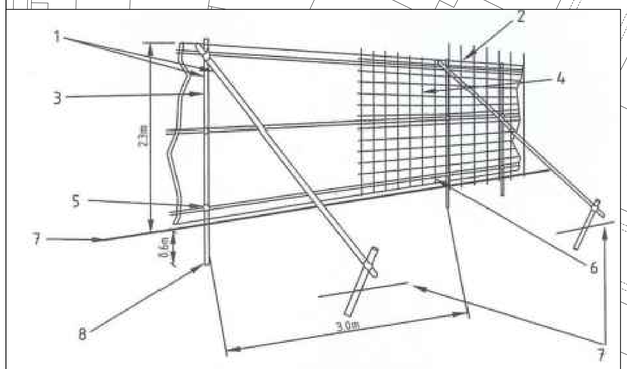

1 Standard scaffold poles
2 Uprights to be driven into the ground
3 Panels secured to uprights with wire ties and, where necessary, standard scaffold clamps
4 Weldmesh wired to the uprights and horizontals
5 Standard clamps
6 Wire twisted and secured on inside face of fencing to avoid easy dismantling
7 Ground level
8 Approx. 0.6m driven into the ground

Figure 2. – Protective fencing for RPA

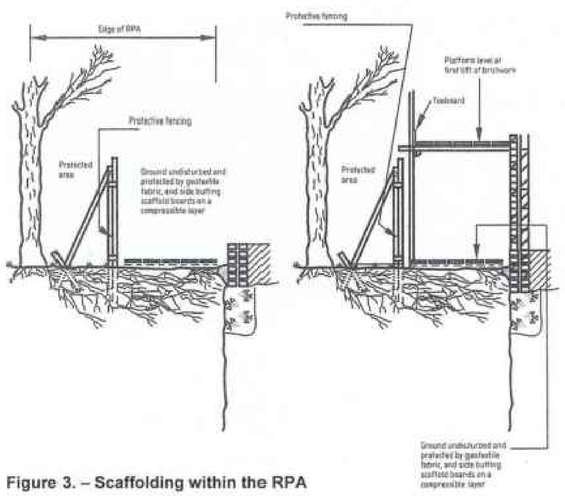

Figure 3. – Scaffolding within the RPA



THIS DRAWING MUST NOT BE SCALED

CONTRACTOR SHALL CHECK ALL DIMENSIONS ON SITE

NOTES:

1. This drawing should be read in conjunction with all other relevant details, drawings and specifications.
3. All dimensions are to be checked on site before the commencement of works. Any discrepancies are to be reported to the Architect & Engineer for verification. Figured dimensions only are to be taken from this drawing.
4. The DWG file is issued for the purposes of coordination only and do not represent formal drawing issue and are not to be reprinted in any form. Formal issue of drawings is via DWF, Adobe PDF files and/or hard copies and their associated information issue sheets.
5. Note that all care has been taken with the export of DWG files and their content, but we recommend that you make due dimensional checks before using any DWG file information. Any errors found are to be reported to MAC Consulting immediately.
6. All levels are shown in metres above Ordnance Datum (m AOD).
7. In the event of any contradiction between this drawing and the specification, then the contractor shall seek clarification from the landscape architect before proceeding.
8. The works on site affect statutory undertakers apparatus, where the contractor is required to verify the location and depth of all such apparatus prior to commencement of work and to take any precautions necessary when working in the vicinity of apparatus.

TREE PROTECTION PLAN KEY

- GREENWAY ACADEMY SITE BOUNDARY
- EXISTING SEWER LINE
- EXISTING BUILDINGS AND PLAYGROUND AREA RETAINED
- EXISTING CAT A TREE TO BE RETAINED
- EXISTING CAT B TREE TO BE RETAINED
- EXISTING CAT C TREE TO BE RETAINED
- EXISTING CAT U TREE TO BE REMOVED
- ROOT PROTECTION AREA
- INCURSION INTO RPA REQUIRED SUPERVISED HAND DIG ONLY
- EXISTING VEGETATION TO BE RETAINED
- PROPOSED TREE STANDARD NATIVE REFER SCHEDULE
- TREE PROTECTION FENCE

N

0 12.5 25 Metres

REV	DESCRIPTION	DATE	DRN	CHK
--	--	--	--	--
--	--	--	--	--
--	--	--	--	--
P03	CONTRACTORS PROPOSALS	11/01/2023	MC	MS
P02	PLANNING ISSUE	03/08/2022	MC	MS
P01	DRAFT CONTRACTORS PROPOSALS	28/07/2022	MC	MS

DRAWING NO.	SRP1029-MAC-XX-XX-D-L-0012
REVISION	P03
DRAWING TITLE	TREE PROTECTION PLAN
DRAWING SIZE	A1
SCALE	1:500
DATE	20/07/2022
DRAWN BY	MC
CHECKED	MS
STATUS	S4
CLIENT	REDS10
PROJECT	GREENWAY ACADEMY HORSHAM WEST SUSSEX RH12 2JS

GLF TRUST	
SIGNED	
DATE	
DEPARTMENT FOR EDUCATION	
SIGNED	
DATE	

MAC CONSULTING (SCOTLAND) LIMITED
LANDSCAPE · SPORTS · ENVIRONMENT
EDINBURGH
T: 01383761100
E: info@macconsultingscotland.com
W: macconsultingscotland.com

COPYRIGHT © MAC Consulting (Scotland) Limited.
Not to be reproduced without written consent of MAC Consulting (Scotland) Limited.