**From:** Andrew.Clout
**Sent:** 17 April 2024 09:58
**To:** Amanda.Wilkes
**Cc:** Trees
**Subject:** FW: DC/23/2064 - Senlac, Shoreham Road, Henfield
**Attachments:** 23051 - SDEP - East - 2.03H - Proposed Site Plan - PLANNING.pdf; Cycle Store Details.pdf

Hi Amanda,

As briefly discussed, I raise no additional concerns in respect of the proposed amendment.

Regards

Andy

**Andrew Clout**
Assistant Arboricultural Officer (Tues and Weds only)

**Telephone:** 01403 215524
**Email:** Andrew.Clout@horsham.gov.uk

Horsham District Council

**Horsham District Council, Parkside, Chart Way, Horsham, West Sussex RH12 1RL**
Telephone: 01403 215100 (calls may be recorded) www.horsham.gov.uk Chief Executive: Jane Eaton

**From:** Amanda.Wilkes <Amanda.Wilkes@horsham.gov.uk>
**Sent:** 15 April 2024 17:15
**To:** Tim Townsend <tim.townsend@westsussex.gov.uk>; Inês.Watson <Ines.Watson@horsham.gov.uk>; Andrew.Clout <Andrew.Clout@horsham.gov.uk>
**Subject:** FW: DC/23/2064 - Senlac, Shoreham Road, Henfield

Good Afternoon

**RE: DC/23/2064 - Senlac, Shoreham Road, Henfield**

The attached plan shows a slightly repositioned cycle storage shelter accessed via a no dig pathway. The cycle storage details are as previously approved under DC/20/0049.

We have had difficulty trying to find an acceptal;e location for the cycle storage unit and it has been re located a number of times to try to overcome everyone's concerns, be-it landscape, trees or Highways.

I hope that this designed have been having difficulty finding a suitable place for the proposed cycle storage area Please can you advise whether this overcomes previous concerns… see email below.

I would be grateful if you could let me know your thoughts urgently as it is only this matter which is the sticking point on the application!

Many thanks

Amanda

**Amanda Wilkes**
Senior Planning Officer (Monday-Wednesday)

**Telephone:** 01403 215521
**Email:** Amanda.Wilkes@horsham.gov.uk

Horsham District Council

**Horsham District Council, Parkside, Chart Way, Horsham, West Sussex RH12 1RL**
Telephone: 01403 215100 (calls may be recorded) www.horsham.gov.uk Chief Executive: Jane Eaton

**From:** Kathryn Sadler <kathryn@sadlerplanning.co.uk>
**Sent:** 15 April 2024 17:03
**To:** Amanda.Wilkes <Amanda.Wilkes@horsham.gov.uk>
**Subject:** DC/23/2064 - Senlac, Shoreham Road, Henfield

Afternoon Amanda

Thank you for your phone call this afternoon.

We have moved the cycle store slightly further north to allow for a footpath along the southern edge of the store to provide clear pedestrian access to the cycle store. See attached site plan.

The cycle store and path will be constructed by the 'no dig' technique although this area is already disturbed due to the alignment of the original driveway along the northern boundary of the site.

The RPA of T5 is off centre and is predominantly to the north of the tree due to the alignment of the original driveway.

This off-centre RPA together with the no dig technique (floating raft foundation) for the cycle store, will not have an impact on the RPA of this tree.

I attach a copy of the cycle store details which have already been approved by HDC under application DC/20/0049 (Condition 16).

If you could confirm that this plan is acceptable then I will get the landscape plan and ecology reports updated to reflect this slight amendment.

Kind regards,

Kathryn

**Kathryn Sadler**
BA (Hons) Dip TP MRTPI
Director
07904 762593
sadlerplanning.co.uk

SADLER PLANNING

RTPI Chartered Town Planner

Sadler Planning Limited, 108 College Lane, Hurstpierpoint, West Sussex BN6 9AJ
Incorporated and Registered in England and Wales under Company Registration No. 14536773

N

Eco Cycle Shelter & Rack
12no. cycle spaces

zero dig foot path adjacent to cycle store

new surface water drainage to be connected to existing surface water drainage network

ex. roadway

BUILDING 1

BUILDING 2

Unit 1

Unit 2

Unit 3

new foul water drainage to be connected to existing foul drainage network

powerlines development exclusion zone

linework denotes existing Foul Water Drainage run installed on site - as per GTA Civil's drawing no. *7777/1601/P5 - Drainage Strategy*

overhead powerlines

overhead powerlines

approx. position of Sewage Treatment Plant installed on site - as per GTA Civil's drawing no. *7777/1601/P5 - Drainage Strategy*

visibility splays to be maintained and kept free of all obstructions over a height of 600mm above adjoining carriageway level

visibility splay - 2.4m x 130m - as per approved scheme ref: DC/20/0049

visibility splay - 2.4m x 125m - as per approved scheme ref: DC/20/0049

visibility splays to be maintained and kept free of all obstructions over a height of 600mm above adjoining carriageway level

0m 2m 4m 6m 8m 10m

scale bar - 1:200 @ A1

## NOTES

- DO NOT SCALE OFF THIS DRAWING EXCEPT FOR PLANNING PURPOSES
- CHECK ALL DIMENSIONS ON SITE BEFORE ANY WORK IS COMMENCED
- ALL GOODS MATERIALS AND WORKMANSHIP MUST CONFORM WITH CURRENT BUILDING REGULATIONS, BRITISH STANDARDS AND CODES OF PRACTICE
- COPYRIGHT OF THIS DRAWING IS RETAINED BY THE ARCHITECT AND IT MUST NOT BE REPRODUCED WITHOUT WRITTEN CONSENT

| REV | DATE | BY | AMENDMENT |
|---|---|---|---|
| H | 15.04.24 | ec | cycle store re-positioned |
| G | 24.01.24 | ec | landscape scheme updated |
| F | 18.01.24 | ec | additional 03.no. EC points added |
| E | 13.12.23 | ec | visibility splays indicated and cycle store relocated @ HA request |
| D | 30.10.23 | ec | drainage added |
| C | 09.1023 | ec | PLANNING ISSUE |
| B | 15.09.23 | ec | gen. updates to scheme |
| A | 10.08.23 | ec | gen. updates to scheme |

folkes architects
The Old Forge
6 Church Street
Storrington
West Sussex
RH20 4LA
t. 01903 868629
info@folkesarchitects.co.uk

CLIENT
Coles Automotive Property Ltd

JOB TITLE
Unit 2 (East)
Southdowns Enterprise Park
Shoreham Road
Henfield
West Sussex

DRAWING TITLE
Proposed Site Plan

DRAWING STATUS
PLANNING
NOT FOR CONSTRUCTION USE UNLESS STATED AS 'CONSTRUCTION'

| DATE | SCALE | DRAWN BY |
|---|---|---|
| June '23 | 1:200 @ A1 | ec |
| | | CHECKED BY mf |

| JOB NO. | DRAWING NO. | REVISION |
|---|---|---|
| 23051 | 2.03 | H |




urban

PROSPECT BUILDING, SHIELD GREEN FARM, TRITLINGTON
NORTHUMBERLAND. NE61 3DX
EMAIL: sales@urbanfab.com
Tel: 0191 5343211

# ECO CYCLE SHELTER RANGE



**Product Name: Eco Cycle Shelter and Rack**

**Product Code: USP/ES12/6HR**

**Size: 4600 mm Long x 2040 mm Wide x 2100 mm High**

**Description: 12 Cycle Capacity Shelter Complete with**

**Sheffield toast rack**

**Price: £ 1299.00 plus Vat**

**Total Price including Vat £ 1558.80**

**Side Panel option Kit £ 252.00 plus Vat Total for side panel kit including vat £ 302.40**

**LEAD TIME EX STOCK 4 TO 5 DAYS**

**Carriage: Free UK Mainland delivery** (other destinations please telephone for a quote)

Product information: The Cycle Shelters are made with a mild steel frame and are Plate Mounted Bolt down. The Eco Cycle Shelter is very easy to assemble and is delivered flat pack. The shelter is lightweight yet robust and being galvanised will give maximum protection from rust for many years. This is a full-size shelter and will take up to 12 adult cycles. The assembly




PROSPECT BUILDING, SHIELD GREEN FARM, TRITLINGTON
NORTHUMBERLAND. NE61 3DX
EMAIL: sales@urbanfab.com
Tel: 0191 5343211

is very straight forward. The shelters are available in Galvanised finish only however if you want a painted shelter, simply assemble the frame and paint it to the desired colour (leave it to dry) and then fit the sheeting. To hand paint a shelter will only take about 45 minutes.

The Cycle Rack is manufactured with 50 mm diameter tube and is also fully galvanised to BS EN ISO 1461:1999. Complete with flanges for bolting directly to suitable ground surface. Easy to fit and supplied as a full section so no assembly other than ground fixing.

To order this product please telephone 01665577022 or email sales@urbanfab.com. We will need to know the delivery address including post code and how soon you want delivery. The shelter is manufactured in large sections however assembly is a straight forward two person job.

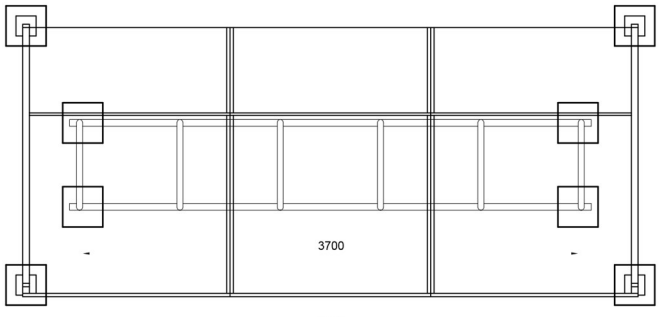


PLAN

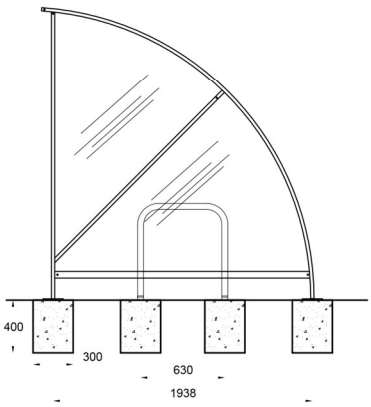


END ELEVATION

C35 CONCRETE SET ON
FIRM BED OF SAND OR
CLAY




urban

PROSPECT BUILDING, SHIELD GREEN FARM, TRITLINGTON
NORTHUMBERLAND. NE61 3DX
EMAIL: sales@urbanfab.com
Tel: 0191 5343211

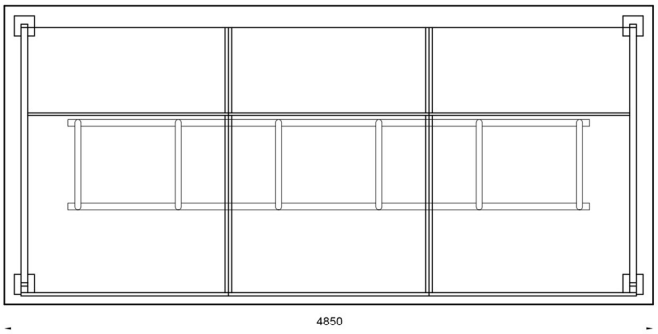


PLAN

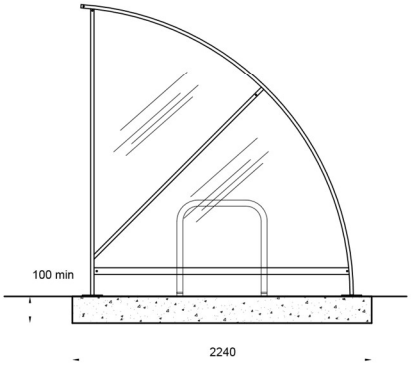


END ELEVATION

C35 CONCRETE SET ON
FIRM BED OF SAND OR
CLAY



Product Code USP/ES12/6HR