DRAWING No
UNIT 6 – EXTERNAL

SHEET
1 OF 1

REFER TO EVANS & LANGFORD SITE DRAWING
16186 / S1 – AUGUST 2023

INTERNAL CONSTRUCTION;
METAL FRAME WORK
CONCRETE BLOCK WALLS (WITH INSULATION?)
SUSPENDED PANEL CEILING (WITH INSULATION?)

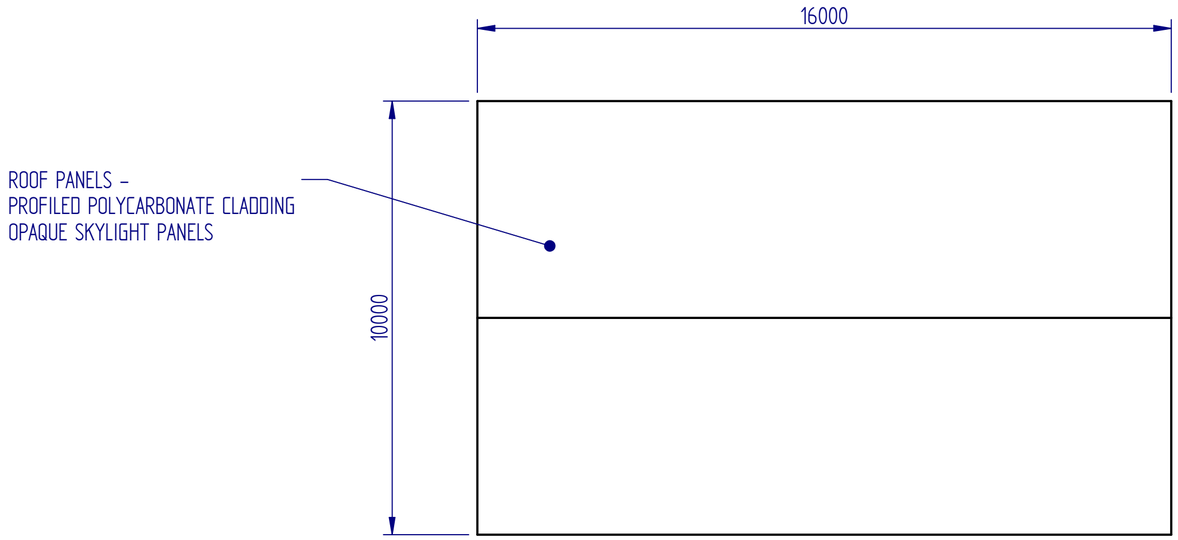

PLAN VIEW

NORTH

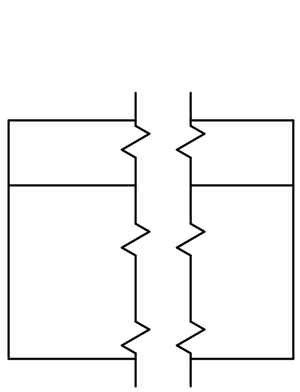

SIDE ELEVATION
(SOUTH FACING)

NO FEATURES

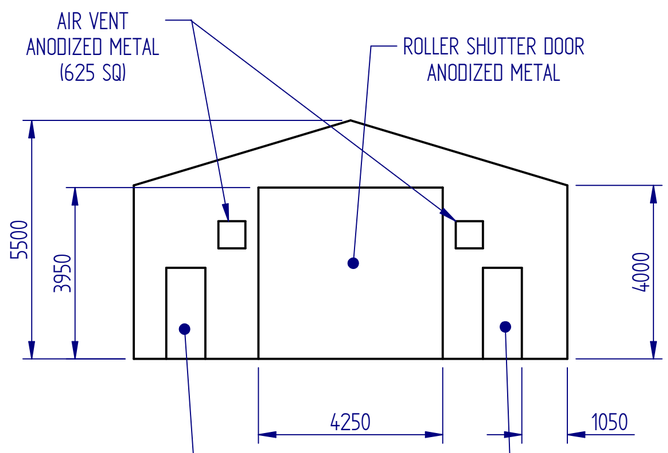

FRONT ELEVATION

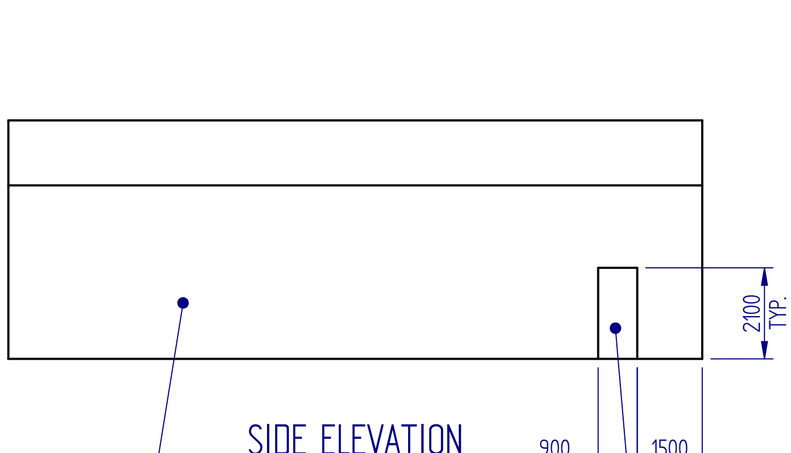

SIDE ELEVATION
(NORTH FACING)

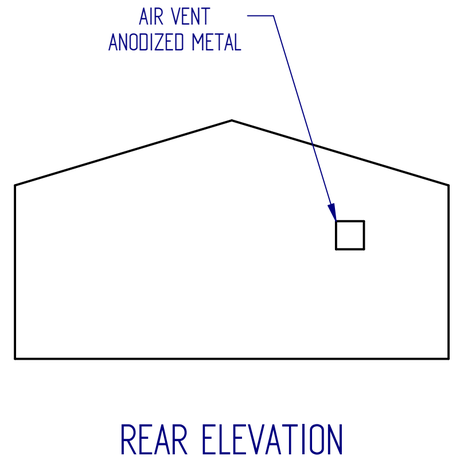

REAR ELEVATION

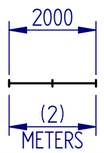

DO NOT DEVIATE FROM DRAWING IF IN DOUBT-ASK

FOR INFORMATION OR QUOTATION ONLY
DO NOT USE FOR MANUFACTURE

ISSUE	DATE	SIGN	MOD No (OR DESCRIPTION OF CHANGE)
1	DD/MM/YY	XXX	##### NEW ISSUE

MATERIAL
SPECIFICATION
ESTIMATED WEIGHT

TOLERANCE-LINEAR
TOLERANCE-ANGULAR
SURFACE FINISH

EDGE CONDITIONS
SURFACE TREATMENT

UNLESS OTHERWISE STATED

DRAWN: MTP
DATE: 06/11/23
CHECKED:
DATE:

THIRD ANGLE PROJECTION

THIS DRAWING CONTAINS PROPRIETARY AND CONFIDENTIAL INFORMATION BELONGING TO TESLA ENGINEERING LIMITED AND IS INTENDED FOR EXCLUSIVE USE BY CURRENT EMPLOYEES OF TESLA ENGINEERING LIMITED. REPRINTING, COPYING OR DISCLOSURE EITHER IN WHOLE OR IN PART TO A THIRD PARTY IS PROHIBITED WITHOUT WRITTEN PERMISSION OF TESLA ENGINEERING LIMITED. © 2023

USED ON

SCALE: 1:100

DIMENSIONS IN: mm

tesla
TESLA ENGINEERING LIMITED
STORRINGTON SUSSEX ENGLAND

TITLE
TESLA ENGINEERING LTD
BUILDING – UNIT 6

SIZE: A2

DRAWING No.
UNIT 6 – EXTERNAL

SHEET
1 OF 1