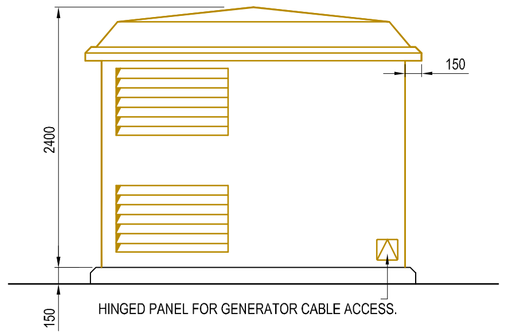

LEFT HAND SIDE ELEVATION

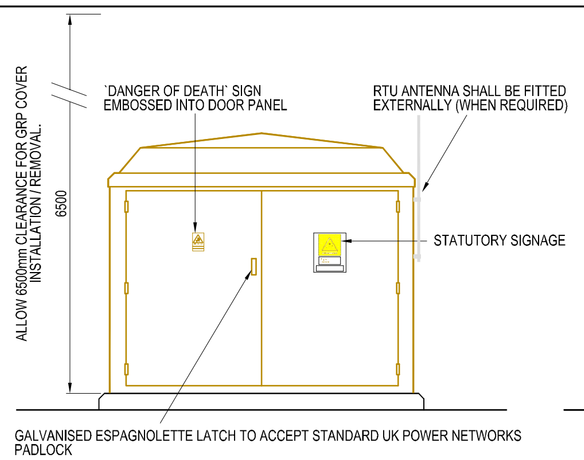
`DANGER OF DEATH` SIGN EMBOSSED INTO DOOR PANEL
RTU ANTENNA SHALL BE FITTED EXTERNALLY (WHEN REQUIRED)
ALLOW 6500mm CLEARANCE FOR GRP COVER INSTALLATION / REMOVAL.
6500
STATUTORY SIGNAGE
GALVANISED ESPAGNOLETTE LATCH TO ACCEPT STANDARD UK POWER NETWORKS PADLOCK

FRONT ELEVATION

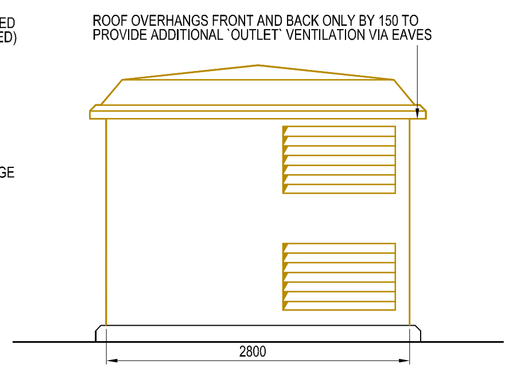

RIGHT HAND SIDE ELEVATION

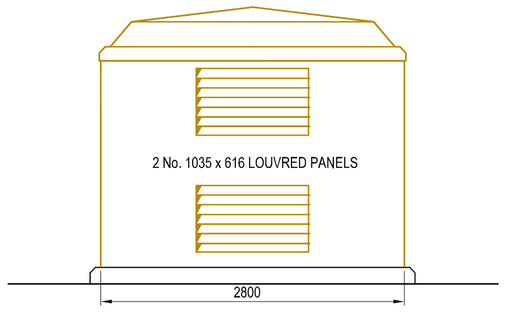

REAR ELEVATION

PROPOSED SUBSTATION LOCATION TO BE ADVISED BY DEVELOPER AND AGREED WITH UK POWER NETWORKS PRIOR TO CONSTRUCTION.

IF WITHIN 10m OF A WATERCOURSE OR WITHIN 50m OF A BOREHOLE USE THE FULLY-BUNDED DESIGN DRAWING EDS 07-3102.02

LOCATION PLAN

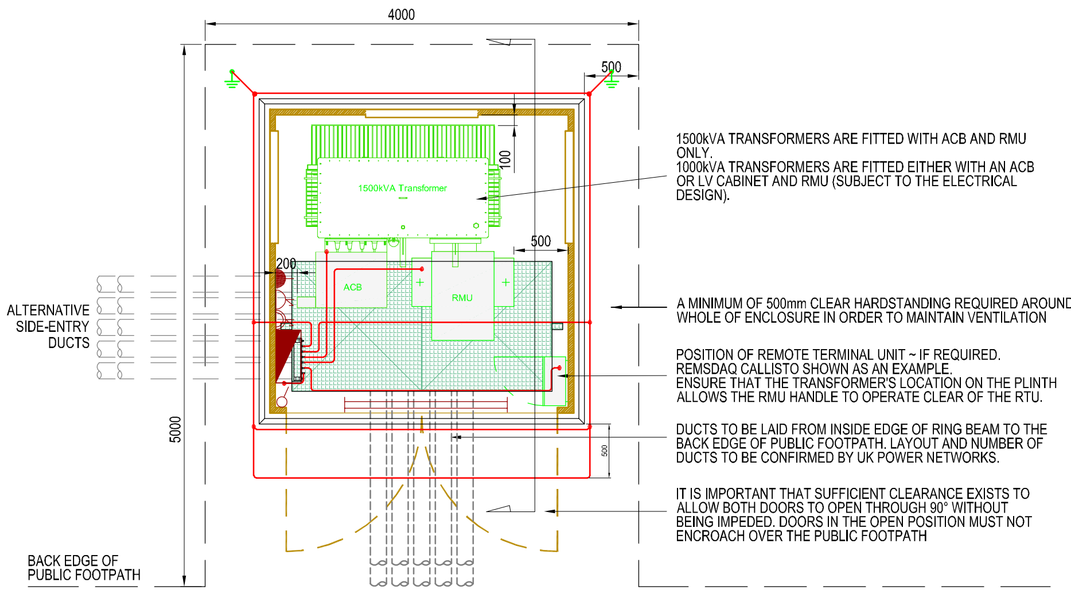

PLAN VIEW OF SITE AND EQUIPMENT ARRANGEMENT

(GRP ROOF REMOVED FOR CLARITY)

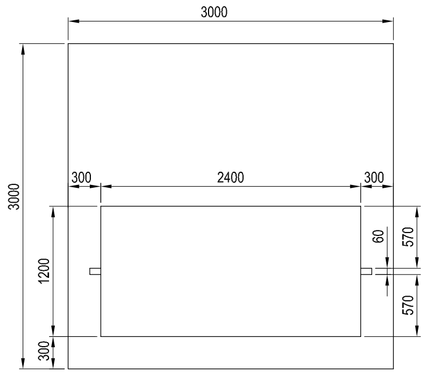

SETTING OUT DIMENSIONS

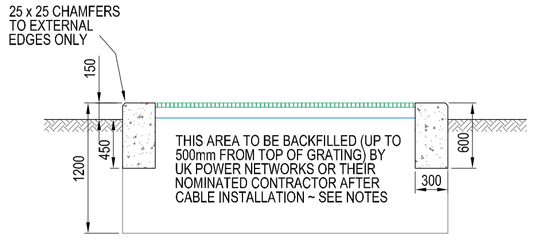

SECTION A-A

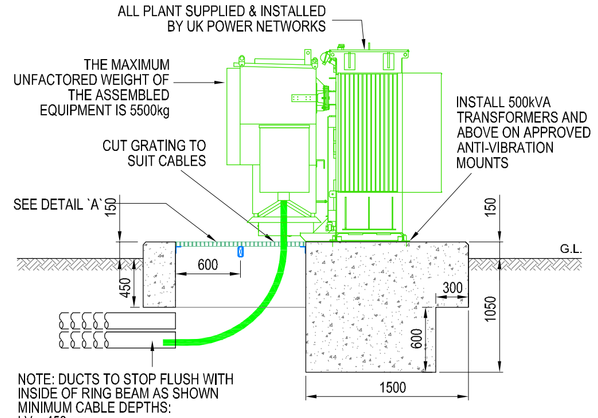

UNIT SUBSTATION ~ SECTION B-B

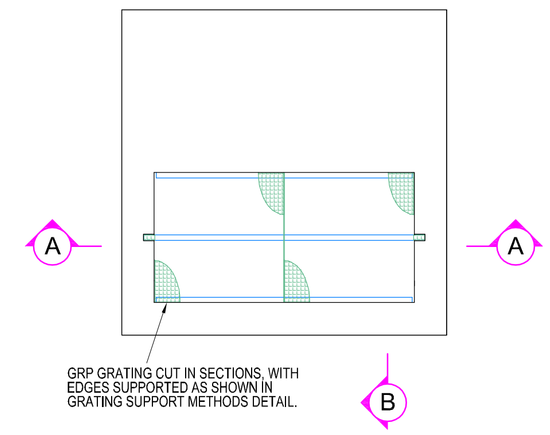

FOUNDATION PLAN VIEW

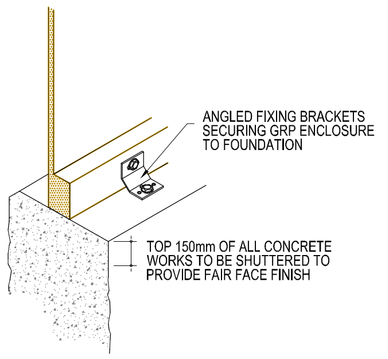

FIXING OF GRP COVER TO FOUNDATION ~ DETAIL

REFERENCES

SHEET 2	EARTHING LAYOUT
SHEET 3	SMALL POWER AND LIGHTING LAYOUT
EAS 07-0000	APPROVED EQUIPMENT LIST - CIVIL
EAS 02-0000	APPROVED EQUIPMENT LIST - CABLES & DUCTS
EDS 07-0119	SUBSTATION ELECTRICAL SERVICES
EDS 07-3101	PRE-DESIGN REQUIREMENTS FOR SECONDARY SUBSTATIONS
EDS 07-3102	SECONDARY SUBSTATION CIVIL DESIGN STANDARD

EQUIPMENT WHICH MAY BE USED WITH THIS DESIGN

- UNIT SUBSTATION WITH A 1500kVA TRANSFORMER OR BELOW.
- MICRO SUBSTATION.
- COMPACT SUBSTATION.

GENERAL NOTES

- DO NOT SCALE FROM THIS DRAWING. NO VARIATION TO THE STATED DIMENSIONS OR MATERIALS SPECIFIED WILL BE PERMITTED WITHOUT PRIOR WRITTEN CONSENT FROM UK POWER NETWORKS.
- ALL DIMENSIONS ARE IN MILLIMETRES.
- THE RUNNING OF SPRINKLER SYSTEM, HEATING, GAS, TELECOMS, WATER AND OTHER SERVICES THROUGH OR UNDER THE SUBSTATION AREA IS NOT PERMITTED.
- WORKMANSHIP AND MATERIALS TO CONFORM TO THE LATEST EDITION OF THE RELEVANT CODES OF PRACTICE OR BRITISH STANDARD AND EUROCODES.
- LOCATION OF THE SITE SHALL BE OVERLAID ON THE ORDNANCE SURVEY MAP AND ADDED ONTO THE PROJECT SPECIFIC DRAWING.

PLANNING, LOCATION AND POSITION

- POSITION AND ORIENTATION OF THE SUBSTATION SHALL BE AGREED WITH UK POWER NETWORKS PRIOR TO THE COMMENCEMENT OF ANY BUILDING WORKS ON SITE.
- SUBSTATIONS SHALL BE LOCATED ADJACENT TO A PUBLIC HIGHWAY OR REACHED BY A PRIVATE DEDICATED ACCESS WAY WITH FULL CONTROL AND ASSOCIATED LEGAL RIGHTS.
- THE DEVELOPER IS RESPONSIBLE FOR OBTAINING ALL PLANNING CONSENTS AND BUILDING REGULATION APPROVALS.
- UNIMPEDED ACCESS FOR UK POWER NETWORKS PERSONNEL IS REQUIRED AT ALL TIMES, 365 DAYS OF THE YEAR (24/7). ANY DOORS OR GATES ON THE ACCESS ROUTE SHALL BE LOCKED WITH THE STANDARD UK POWER NETWORKS LOCKING SUITE.
- ACCESS VIA 24 HOUR SECURITY IS UNACCEPTABLE.
- PROPOSED SOFT LANDSCAPING ADJACENT TO THE SUBSTATION (E.G. PLANTING SCHEMES) SHALL ALLOW FOR FUTURE PLANT GROWTH WITHOUT COMPROMISING ACCESS OR VENTILATION THROUGH DOORS AND LOUVRES.
- GRP SUBSTATIONS SHALL BE AT LEAST 4m AWAY FROM THE NEAREST BUILDING UNLESS A 4HR FIRE BARRIER IS LOCATED IN BETWEEN.

FOUNDATION AND REINFORCED CONCRETE

- AS STATED ON DRAWING OR TO SUIT THE SITE CONDITION.
- SUFFICIENT COVER TO THE REINFORCEMENT TO ACHIEVE A 4 HOUR FIRE RATING (50mm MINIMUM).
- FOR PRELIMINARY DESIGN, ASSUME 50kN/m²INCREASE IN GROUND PRESSURE AT FORMATION LEVEL.
- STRUCTURAL CONCRETE TO BE POURED ON 50mm GEN1 MIX CONCRETE BLINDING ON 1200 GAUGE GEOMEMBRANE, ON SAND BLINDING, ON WELL COMPACTED DTp1 TYPE MATERIAL.
- REINFORCING BARS TO BE ELECTRICALLY CONTINUOUS.

FLOOR SLAB

- TO THE STRUCTURAL ENGINEER'S SPECIFICATIONS TO SUSTAIN LOADS SHOWN. THE ENTIRE ACCESS ROUTE IS TO BE CAPABLE OF SUSTAINING THE EQUIPMENT LOAD.
- STANDARD FLOOR SLAB THICKNESS OF 225mm MINIMUM REINFORCED CONCRETE WITH A SUITABLE WEARING SCREED WITH A MINIMUM COMPRESSIVE STRENGTH OF 40N/mm2 AFTER 28 DAYS. CONCRETE WORKS FINISED WITH STEEL FLOAT TO WITHIN +/-2mm OVER 2000mm.
- REINFORCEMENT TO DEVELOPER'S STRUCTURAL ENGINEER'S REQUIREMENTS.

GRP ENCLOSURE

- SUPPLIED AND INSTALLED BY UK POWER NETWORKS. USUALLY DELIVERED ASSEMBLED. FLAT PACK UNITS ARE AVAILABLE ON REQUEST.
- TOTAL WEIGHT OF GRP ENCLOSURE IS 600kg.
- THREE WAY LOCKING DEVICE WITH FREE ISSUED UK POWER NETWORKS PADLOCK.
- THE THRESHOLD SECTION BELOW THE DOORS IS REMOVABLE TO FACILITATE PLANT MOVEMENT.
- KEEP 1000mm CLEARANCE MINIMUM ABOVE ENCLOSURE FOR PRESSURE RELIEF AT ALL TIMES.
- ALLOW 6500mm CLEAR HEADROOM FOR THE REMOVAL OF THE ENCLOSURE DURING MAINTENANCE OR REPLACEMENT OF THE TRANSFORMER.
- MAXIMUM LOAD ON ROOF TO BE 2.5kN/m².
- LOUVRED VENTS SHALL NOT BE OBSTRUCTED; A MINIMUM CLEAR AREA OF 500mm IS REQUIRED AROUND THE ENCLOSURE.
- STANDARD COLOURS ARE MID BROWN 08-B-25 OR DARK GREEN 14-C-39 TO BS4800.

DUCTS

- 125mm INTERNAL DIAMETER TWIN WALLED HIGH DENSITY POLYETHYLENE DUCTING TO ESI 12-24 OR BS EN 61386, LAID FLAT AND LEVEL.
- NUMBER AND ENTRY POSITIONS SHALL BE VERIFIED BY UK POWER NETWORKS.

INFILL TO AREA AROUND CABLES

- AFTER CABLE INSTALLATION, SEAL ALL CABLE DUCTS, FILL TRENCHES WITH SAND WITH 100mm ABOVE TOP DUCT AND TO A MINIMUM OF 500mm BELOW THE TOP OF GRATINGS.

GRP GRATINGS AND SUPPORTS

- USE APPROVED 38mm DEEP MOULDED GRP GRATINGS; OPEN TYPE WITH GRITTED SURFACE AND COLOUR GREEN.
- GRATING SHALL BE FLUSH WITH TOP OF FOUNDATION AND SECURELY SUPPORTED, SEATED LEVEL WITH NO NOTICEABLE ROCKING OR SLIDING.
- CUT OFF OPENINGS FOR CABLE PENETRATIONS ENSURING THE GRATINGS CAN BE REMOVED WITH CABLES IN-SITU WHILE STILL REMAINING STABLE.
- STEELWORK FOR GRP GRATING SUPPORTS SHALL BE GALVANISED.

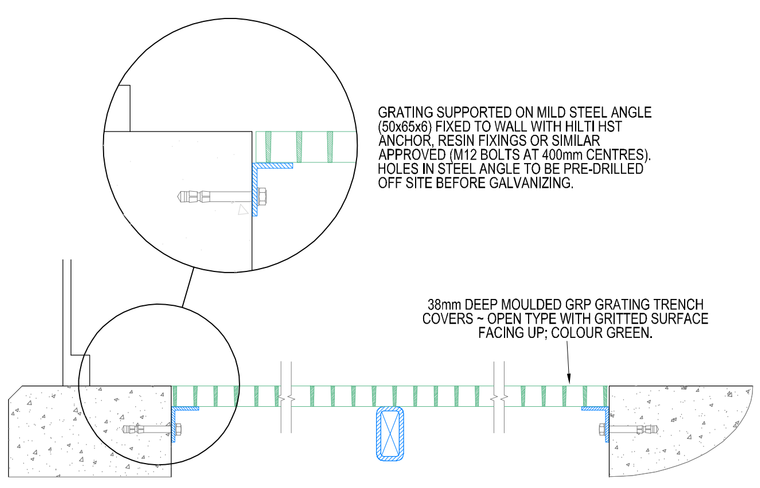

DETAIL `A` (SECTION B-B)

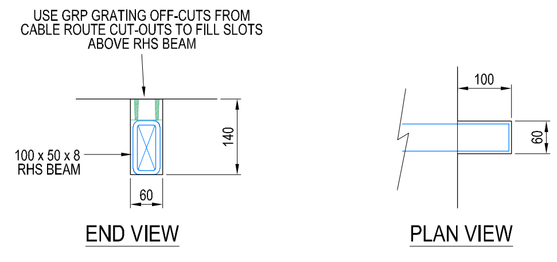

GRATING SUPPORT BEAM IN CONCRETE RECESS

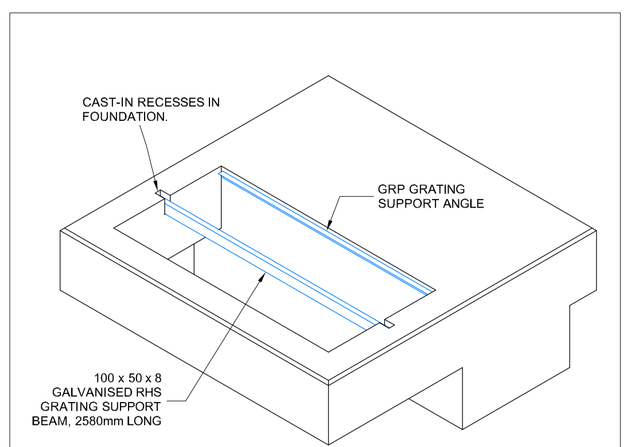

FOUNDATION ~ ISOMETRIC VIEW

Version	Date	Description	Checked	Drn.
C	26-10-18	Design revised to show 1500kVA transformer	UA	RDH
			UA	UKPN
B	05-01-18	Equipment positioning dimension added.	UA	RDH
			UA	UKPN
A	09-08-17	ORIGINAL	UA	RDH
			UA	UKPN
			Approved	Designed

UK Power Networks

TITLE

UNIT OR PADMOUNT SUBSTATION IN A GRP ENCLOSURE

CIVIL LAYOUT

SCALE NTS @A1 APPROVED

Version C

DRAWING NO. EDS 07-3102.01 Sht 1 of 3

SITE SECONDARY SITES

This UK Power Networks drawing illustrates good practice regarding health, safety, security and cost efficiency, but design responsibility rests with the issuer of the site-specific version of the drawing.