ODYSSEY
DEVELOPING JOURNEYS

Flood Risk Management Team
Ground Floor
Northleigh
County Hall
Chichester
West Sussex
PO19 1RH

Our Ref: AK/ak24026/23-020

Date 2nd February 2024

By Email Only

Dear Sirs

Re: Sumners Pond Fishery and Campsite, Chapel Road, Barns Green, West Sussex, RH13 0PR

We are writing in relation to your letter dated 12th December 2023.

We would like to provide further clarification and information in relation to your comments – we will keep the same numbering for ease of reference.

1. *Source Control above ground SuDs features to be incorporated back into the sustainable drainage design.* We have investigated the feasibility of bringing the swale back into the scheme. The requirement for the site levels tying-in with the existing third-party land at the eastern boundary meant that the swale would be excessively deep at its downstream end (and therefore not practical from the drainage and Health and Safety point of view). However, to improve the overall performance of the system the current drainage scheme introduces a new SuDS feature which was not included in the original scheme - namely a rainwater harvesting tank for each property.

2. *Detailed Hydraulic modelling of the WHOLE SITE proposed discharge networks and the downstream capacities. It is not acceptable to discharge surface water at an uncontrolled rate increasing both the discharge volumes and rates downstream which is not in accordance with Policy.* The proposed surface water (SW) scheme is updated and uncontrolled discharge into the Sumners Lake has been removed. Currently the proposed SW scheme reverts to the approved planning strategy and adopts approved flow rates for three separate SW systems. Please refer to the updated drawings 23-020-201C and 23-020-202A and associated calculations "23-020 - Sumners Pond, Barns Green_SW Northern System_RevA" and "23-020 - Sumners Pond, Barns Green_SW Southern System_RevA" (all appended to this letter).

3. *FEH2022 network drainage calculations for the proposed development surface water should be provided for the following return periods…* Microdrainage software that was used to model the SW networks do not directly support FEH22 rainfall data. However, we have compared the FEH22 and FEH13 rainfall depths – as per attached comparison sheet – and as a result we have increased the modelled input flows by 10% (which was the approximate increase in rainfall depth when comparing FEH13 and FEH22 data for the 6 hour storm with the return period of 1 in 100 years).

BASINGSTOKE
Tuscany House
White Hart Lane, Basingstoke
RG21 4AF
01256 331144

LONDON
18-21 Morley Street
London
SE1 7QZ
020 7620 2444

SOUTHAMPTON
Unit 1 Pucknall Farm
Dores Lane, Braishfield
SO51 0QJ
01794 537980

Email: info@odysseyconsult.co.uk
www.odysseyconsult.co.uk

Odyssey is a trading name of Odyssey Consult LLP | Registered in London No. OC385254 | Registered Office: Tuscany House, White Hart Lane, Basingstoke, Hampshire, RG21 4AF.

Our SW model was tested against two rainfall events, i.e. 50% and 1 % AEP (the latter allowing also for a 45% climate change effect). The model predicts that there would be no pipe surcharge (other than backing up from the storage structures) for the 50% AEP event and no flooding from the SW system for the 1% AEP event. This also means that there would be no flooding during the 3.33% AEP event which was not tested but was requested by the LLFA to be considered.

Main access road SW system with associated attenuation was modelled using Source Control module of Microdrainage. This system was not modelled as a network as it contains oversized attenuation pipes in series rather than a network of smaller runs.

4. *A water quality assessment should be provided, in accordance with the simple index approach from the CIRIA SuDS Manual.* The below table is reproduced from Table 26.2 of CIRIA C753 document. The pollution hazard level for this development is assessed to be 'Low' and falls within the "Individual property driveways, residential car parks, low traffic roads…" land use category with the associated pollution hazard indices.

Land Use	Pollution Hazard Level	Total Suspended Solids (TSS)	Metals	Hydro-carbons
Residential roofs	Very low	0.2	0.2	0.05
Individual property driveways, residential car parks, low traffic roads (e.g. cul de sacs, homezones and general access roads) and non-residential car parking with infrequent change (e.g. schools, offices) i.e. less than 300 traffic movements per day	Low	0.5	0.4	0.4

Compact nature of the approved site layout meant that natural and site wide SUDS techniques were not practicable to be implemented. It is therefore proposed to utilise a proprietary treatment system (which would be used downstream of the final flow controls from respective systems). This approach is in accordance with Table 26.3 of CIRIA C753 document. The proposal is to use a proprietary product i.e. Aqua-Swirl from SDS (or similar product providing no lesser mitigation indices) that uses hydrodynamic separation technology. The below table summarises the mitigation indices offered by Aqua-Swirl (and the manufacturer leaflet is attached to this letter).

Type of SuDS Component	Mitigation Indices		
	TSS	Metals	Hydrocarbons
Proprietary treatment system	0.8	0.5	0.7

It can be seen that mitigation indices offered by the proprietary treatment system like Aqua-Swirl would exceed the pollution hazard indices for the given land use category therefore the water quality element of the scheme is meet in accordance with the simple index approach.

Please note that the SW system serving main access road do not offer at the moment any proprietary treatment system as such inclusion would be part of the ongoing S38 negotiations for this access road. The use of proprietary treatment system would depend on if such products are suitable for adoption by the highway authority. In case the main access road would remain private a proprietary treatment system (such as Aqua-Swirl) would be included in the drainage system serving this road.

5. *The Drainage Strategy indicates the maintenance requirements for the proposed system; however, we do not agree with the changes proposed to the design principles. The document also needs to be a useable document for future residents and requires site specific plans to be submitted.* Please see the

separate SW maintenance report appended to this letter. This maintenance report is a standalone document that could be a useable document for future residents.

Yours faithfully

Arek Kadlec
Principal Engineer
(Southampton Office)

Appendix 1

Current Drainage Designs

LEGEND:

- SITE BOUNDARY
- FWMH - PUBLIC FOUL WATER MANHOLE UNDER SECTION 106/104
- FWMH - FOUL WATER MANHOLE (PCC RINGS) - MIN 1.2m DIA
- FW-IC3 - FOUL WATER INSPECTION CHAMBER - MIN 0.45m DIA
- FW-IC4 - FOUL WATER INSPECTION CHAMBER - MIN 0.25m DIA
- SWMH - SURFACE WATER MANHOLE (PCC RINGS) - MIN 1.2m DIA
- SW-IC3 - SURFACE WATER INSPECTION CHAMBER - MIN 0.45m DIA
- SW-IC4 - SURFACE WATER INSPECTION CHAMBER - MIN 0.25m DIA
- RODDING EYE
- BACKDROP
- EXISTING PUBLIC FOUL WATER SEWER
- 100Ø 1/12 FOUL WATER DRAINAGE
- 225Ø 1/199 SURFACE WATER DRAINAGE
- SURFACE WATER DRAINAGE CHANNEL I.E ACO M100D 0.0 (OR SIMILAR APPROVED) OR AS PER NOTE IF DIFFERENT
- SURFACE WATER FILTER DRAIN TYPE 1 - PERFORATED PIPE LAID FLAT
- SURFACE WATER FILTER DRAIN TYPE 2 - PERFORATED PIPE LAID FLAT
- S38 SURFACE WATER MANHOLE
- S38 SURFACE WATER DRAIN
- S38 ATTENUATION PIPE
- S38 ROAD GULLY
- S38 HEADWALL
- ROAD GULLY
- SW CHAMBER WITH MINIMUM 300mm DEEP SILT TRAP
- FC FLOW CONTROL CHAMBER
- ATTENUATION TANK
- INDICATIVE RAINWATER HARVESTING TANK (RWH) - 3000 LITRES
- INDICATIVE RAINWATER HARVESTING TANK (RWH) - 10000 LITRES
- CHAMBER WITH FILTER AND SILT TRAP, I.E. SEL ENVIRONMENTAL WASP04320 (OR SIMILAR)
- BACKFALL RWH HARVESTING TANK OVERFLOW TO BE CONNECTED WITH BACKFALL TO ACHIEVE CONNECTION LEVEL
- (T) PROPRIETARY TREATMENT DEVICE (I.E. AQUA SWIRL FROM SDS OR SIMILAR)

KEY TO HEALTH AND SAFETY SYMBOLS

ABNORMAL OR UNUSUAL RESIDUAL RISKS ASSOCIATED WITH THE DESIGN OUTCOMES SHOWN ON THIS DRAWING MAYBE INDICATED BY MEANS OF THE FOLLOWING SYMBOLS.

- INDICATES A RESIDUAL RISK REQUIRING A COMPULSORY ACTION.
- INDICATES A RESIDUAL RISK FOR INFORMATION.
- INDICATES A RESIDUAL RISK REQUIRING A PROHIBITIVE ACTION.
- INDICATES A RESIDUAL RISK AS A WARNING.

SHEET PLAN

N

DRAINAGE CHANNEL CONNECTED TO THE ATTENUATION TANK. OUTLET FROM DRAINAGE CHANNEL TO BE VIA PROPRIETARY SILT TRAP

ORDINARY WATERCOURSE CONSENT MIGHT BE REQUIRED FOR INSTALLATION OF THE HEADWALL

GEOCELLULAR ATT TANK 1 PLAN DIMS: 14m x 8m HEIGHT: 0.4m IL IN 32.500 IL OUT 32.400

CONTINUOUS UNDERGROUND GAS PIPE

UNDERGROUND GAS PIPE ENTERING SITE

ACO DRAINAGE CHANNEL - MULTIDRAIN M100D 30.0 (OR SIMILAR WITH THE SAME FLOW CAPABILITIES)

ORDINARY WATERCOURSE CONSENT MIGHT BE REQUIRED FOR INSTALLATION OF THE HEADWALL

EXISTING CULVERT OUTLET HEADWALL TO BE EXAMINED AND REPLACED IF DEEMED NECESSARY. ORDINARY WATERCOURSE CONSENT WOULD BE REQUIRED FOR REPLACEMENT OF THE HEADWALL

DITCH IL 32.990

NEW MANHOLE INSTALLED ON-LINE OF THE EXISTING CULVERT. ORDINARY WATERCOURSE CONSENT IS REQUIRED FOR INSTALLATION OF THE MANHOLE.

HANGING ELECTRIC CABLES

CULVERT/PIPED DITCH UNDER THE ROAD NEED TO BE SURVEYED HERE TO DETERMINE WHETHER IT CLASHES WITH PROPOSED DRAINAGE

RWP TO DISCHARGE ONTO RWP GULLY - TO PROVIDE SW SYSTEM EMERGENCY OVERFLOW

ACO DRAINAGE CHANNEL - MULTIDRAIN M100D 10.0 (OR SIMILAR WITH THE SAME FLOW CAPABILITIES) CONNECTED TO THE ATTENUATION TANK

ACO DRAINAGE CHANNEL - MULTIDRAIN M100D 10.0 (OR SIMILAR WITH THE SAME FLOW CAPABILITIES) CONNECTED TO THE ATTENUATION TANK

ACO DRAINAGE CHANNEL - MULTIDRAIN M100D 10.0 (OR SIMILAR WITH THE SAME FLOW CAPABILITIES) CONNECTED TO THE ATTENUATION TANK

GEOCELLULAR ATT TANK 7 PLAN DIMS: 198m² HEIGHT: 0.235m IL 34.290 (AT DOWNSTREAM END) IL 34.340 (AT UPSTREAM END)

BLACK DASHED LINE INDICATES TANK AREA WITH HEIGHT OF 0.235m USE PERMAVOID (OR SIMILAR) FOR STRUCTURAL CAPABILITIES

GEOCELLULAR ATT TANK 8 (CONNECTED TO AND LEVEL WITH ATT TANK 7 AT BASE LEVEL) PLAN DIMS: 90m² HEIGHT: 0.15m IL 34.340 (AT DOWNSTREAM END) IL 34.390 (AT UPSTREAM END)

USE PERMAVOID (OR SIMILAR) FOR STRUCTURAL CAPABILITIES)

GEOCELLULAR ATT TANK 3 (LOCATED BELOW DETENTION BASIN) PLAN AREA: 285m² HEIGHT: 0.6m IL OUT 32.750

DETENTION BASIN OUTLINE. REFER TO ENGINEERING LAYOUT FOR DETAILED LEVELS AND SHAPE

HANGING ELECTRIC CABLES

GEOCELLULAR ATT TANK 2 PLAN DIMS: 24m x 4m HEIGHT: 0.4m IL IN 32.700 IL OUT 32.600

RWP ADDED TO FEED RWH TANK

GEOCELLULAR ATT TANK 4 PLAN DIMS: 6m x 5m HEIGHT: 0.4m IL 32.650

GEOCELLULAR ATT TANK 6 PLAN DIMS: 12m x 2.5m HEIGHT: 0.45m IL IN 32.880 IL OUT 32.820 USE PERMAVOID (OR SIMILAR) FOR STRUCTURAL CAPABILITIES

GEOCELLULAR ATT TANK 5 PLAN DIMS: 21m x 15m HEIGHT: 0.4m IL IN 32.940 IL OUT 32.820

FWMH S801 CL 33.01 IL 31.31 225mm DIA OUT

UNDERGROUND GAS PIPE EXITING SITE

ATT TANK UPSTREAM END IL 32.900

LOWEST ROAD GULLIES PICKED UP BY THE S38 SYSTEM. SURFACE WATER RUN-OFF BELOW THESE GULLIES TO DRAIN ONTO S278 BELLMOUTH ACCESS

ELECTRICITY POLE WITH HANGING OVERHEAD CABLES

ACO DRAINAGE CHANNEL - MULTIDRAIN M150D 20.0 (OR SIMILAR WITH THE SAME FLOW CAPABILITIES)

FWMH 5701 CL 34.21 IL 31.81 225mm DIA OUT

Chapel Road

INVERT TO INVERT CONNECTION

ALL CONNECTIONS INVERT TO INVERT

GEOCELLULAR ATT TANK 9 PLAN DIMS: 186m² HEIGHT: 0.385m IL 34.470 (AT DOWNSTREAM END) IL 34.520 (AT UPSTREAM END)

BLACK DASHED LINE INDICATES TANK AREA WITH HEIGHT OF 0.385m USE PERMAVOID (OR SIMILAR) FOR STRUCTURAL CAPABILITIES

GEOCELLULAR ATT TANK 10 (CONNECTED TO AND LEVEL WITH ATT TANK 9 AT BASE LEVEL) PLAN DIMS: 90m² HEIGHT: 0.15m IL 34.520 (AT DOWNSTREAM END) IL 34.570 (AT UPSTREAM END)

USE PERMAVOID (OR SIMILAR) FOR STRUCTURAL CAPABILITIES)

ENDCAP OUTLET TYPE MAIN CHANNEL TO BE USED

FOR CONTINUATION REFER TO DRAWING 23-020-202

NOTES

1. CDM REGULATIONS 2015
(i) IN COMPLIANCE WITH CDM 2015 ODYSSEY HAS FOLLOWED IT'S DESIGN RISK MANAGEMENT PROCESS FOR HAZARD ELIMINATION AND RISK REDUCTION IN DEVELOPING THE ODYSSEY DESIGNS SHOWN ON THIS DRAWING.
(ii) THERE ARE EXISTING SERVICES AT OR CLOSE TO THE PROPOSED WORKS AND THESE ARE INDICATED ON DRAWING. ANY OTHER RESIDUAL RISKS ARE THOSE THAT WOULD NORMALLY BE EXPECTED BY COMPETENT PERSONS OR CONTRACTORS WITH NECESSARY SKILLS KNOWLEDGE AND EXPERIENCE TO BE ENGAGED ON WORK OF THIS NATURE OR TYPE.
2. THIS DRAWING IS TO BE READ IN CONJUNCTION WITH ALL OTHER RELATED DRAWINGS ISSUED BY THE ARCHITECT AND ENGINEER.
3. DO NOT SCALE FROM THIS DRAWING. WORK FROM FIGURED DIMENSIONS ONLY.
4. ALL DIMENSIONS SHOWN IN METRES UNLESS NOTED OTHERWISE.
5. IF THERE IS ANY AMBIGUITY BETWEEN THE SPECIFICATION AND THE DRAWINGS OR ANY OTHER DISCREPANCIES ARE FOUND THESE SHOULD BE REPORTED TO THE ENGINEER AND/OR CLIENT IMMEDIATELY SO THAT CLARIFICATION CAN BE SOUGHT PRIOR TO THE COMMENCEMENT OF WORK.
6. ALL DRAINAGE WORKS SUBJECT TO S104 AGREEMENT TO BE CARRIED OUT IN ACCORDANCE WITH THE SEWERAGE SECTOR GUIDANCE, DESIGN AND CONSTRUCTION GUIDANCE (CURRENT VERSION).
7. PRIVATE FOUL WATER AND SURFACE WATER DRAINAGE IS TO BE CONSTRUCTED IN ACCORDANCE WITH THE BUILDING REGULATIONS AND BS EN 752.
8. EXISTING LAND, DRAINAGE FEATURES AND GROUND LEVELS (SHOWN TO AN ORDNANCE DATUM) ARE BASED ON THE CLIENT'S SUPPLIED TOPOGRAPHICAL SURVEY BY 'InCo Surveys' DATED DECEMBER 2020 (PROJECT No. S20264). ODYSSEY ASSUMES NO RESPONSIBILITY ON THE LEVEL OF ACCURACY OF SURVEY INFORMATION PROVIDED. THE CONTRACTOR IS TO CONFIRM THE EXISTING CONDITIONS MATCH THOSE SHOWN ON THE SURVEY AND INFORM ODYSSEY OF ANY DISCREPANCIES SHOULD THEY ARISE.
9. ALL CHAMBERS/MANHOLES IMMEDIATELY UPSTREAM OF ATTENUATION TANKS TO INCORPORATE SILT TRAP.
10. UNLESS SPECIFIED OTHERWISE ALL FOUL AND SURFACE WATER DRAINAGE PIPES TO BE 100mm DIA WITH MINIMUM GRADIENTS OF 1/80 (FOR FOUL) AND 1/100 (FOR SURFACE WATER) RESPECTIVELY.
11. FOR PIPES WHERE MINIMUM COVER IN ACCORDANCE WITH BUILDING REGULATIONS PART H TABLES 8 TO 10 IS NOT MET CONCRETE SLAB / CONCRETE SURROUND PROTECTION MUST BE ADDED OR DUCTILE IRON PIPES USED INSTEAD.
12. ALL RWP'S TO HAVE RODDING ACCESS.
13. FOR SVP's IT IS ASSUMED THAT THE INVERT OF THE TAIL OF THE BEND AT THE FOOT OF THE STACK WILL BE 0.45m BELOW FFL FOR ALL SINGLE DWELLINGS. FOR BLOCK OF FLATS THIS IS ASSUMED TO BE 0.75m BELOW FFL.
14. IT IS ASSUMED THAT ANY BRANCH DISCHARGE PIPE FOR SINGLE DWELLINGS WILL NOT DISCHARGE INTO A STACK LOWER THAN 450mm ABOVE THE INVERT OF THE TAIL OF THE BEND AT THE FOOT OF THE STACK. FOR BLOCK OF FLATS THIS IS ASSUMED TO BE 750mm.
15. PRIVATE INSPECTION CHAMBER SIZES ARE TO BE IN ACCORDANCE WITH THE NHBC STANDARDS SECTION 5.3, TABLES 3 AND 4 OR WHERE APPLICABLE BUILDING REGULATIONS PART H; TABLE 11 AND TABLE 12.
16. INSPECTION CHAMBERS LOCATED WITHIN AREAS OF BLOCK PAVING TO HAVE INSET/INFILL TYPE OF COVER.
17. ALL DRAINAGE TESTING REQUIRED IS TO BE CARRIED OUT AT THE CONTRACTORS EXPENSE.
18. DRAINS IN AREAS OF MADE GROUND TO BE CONSTRUCTED BY FIRST MAKING UP THE AREA TO APPROXIMATELY FINISHED LEVEL AND THEN EXCAVATE THROUGH THE FILL MATERIAL INTO UNDISTURBED GROUND. THE DRAIN TRENCH IS THEN TO BE BACKFILLED TO FORMATION LEVEL USING SUITABLE GRANULAR FILL MATERIAL WELL COMPACTED IN LAYERS NOT EXCEEDING 225 THICK.
19. CONTRACTOR TO SURVEY FOR AND LOCATE THE POSITION AND DEPTH OF ALL SERVICES ACROSS THE SITE BEFORE COMMENCING ANY WORKS.
20. STATUTORY SERVICE DIVERSION WORKS - IF DEEMED NECESSARY - TO BE AGREED WITH THE APPROPRIATE STATUTORY UNDERTAKER.
21. TREE PROTECTION PLAN MUST BE CONSULTED PRIOR TO DRAINAGE WORKS AND ANY POTENTIAL CLASHES REPORTED TO THE CLIENT / ENGINEER AND ARBORICULTURIST IMMEDIATELY.
22. FOR MANHOLE SCHEDULES REFER TO DRAWING 23-020-203.

FOR INFORMATION ONLY - NOT FOR CONSTRUCTION

Rev	Amendments	Drn	Chk	App	Date
C	UPDATES TO SOUTHERN PARCEL ATTENUATION SYSTEM AND ATTENUATION TANKS No.6 AND 1 AND ASSOCIATED DRAINAGE	AK	SW	SW	29.01.24
B	DRAINAGE SCHEME UPDATED AS PER CLIENT'S COMMENTS	AK	SW	SW	16.10.23
A	SOUTHERN PARCEL DRAINAGE UPDATED	AK	SW	SW	10.10.23

ODYSSEY
Unit 1 Pucksall Farm
Dores Lane
Braishfield
Romsey SO51 0QJ
Telephone: 01794 537980
Fax: 01256 331134
E: info@odysseyconsult.co.uk
W: www.odysseyconsult.co.uk

Job Title
SUMNERS POND, CHAPEL ROAD, BARNS GREEN, HORSHAM

Drawing Title
DRAINAGE LAYOUT SHEET 1

Client
SIGMA HOMES

Scale	Date	Designed
1:250 @ A1	SEP 23	AK
Drawn	Checked	Approved
AK	SW	SW
Job No	Drawing No	Rev
23-020	23-020-201	C

P:\23-020 - Sumners Pond, Barns Green, Horsham\Tech\Acad\Drawings\23-020-201 Drainage Layout.dwg

LEGEND:

- SITE BOUNDARY
- FWMH - PUBLIC FOUL WATER MANHOLE UNDER SECTION 106/104
- FWMH - FOUL WATER MANHOLE (PCC RINGS) - MIN 1.2m DIA
- FW-IC3 - FOUL WATER INSPECTION CHAMBER - MIN 0.45m DIA
- FW-IC4 - FOUL WATER INSPECTION CHAMBER - MIN 0.25m DIA
- SWMH - SURFACE WATER MANHOLE (PCC RINGS) - MIN 1.2m DIA
- SW-IC3 - SURFACE WATER INSPECTION CHAMBER - MIN 0.45m DIA
- SW-IC4 - SURFACE WATER INSPECTION CHAMBER - MIN 0.25m DIA
- RODDING EYE
- BACKDROP
- EXISTING PUBLIC FOUL WATER SEWER
- 100Ø 1/12 — FOUL WATER DRAINAGE
- 225Ø 1/199 — SURFACE WATER DRAINAGE
- SURFACE WATER DRAINAGE CHANNEL I.E ACO M100D 0.0 (OR SIMILAR APPROVED) OR AS PER NOTE IF DIFFERENT
- SURFACE WATER FILTER DRAIN TYPE 1 - PERFORATED PIPE LAID FLAT
- SURFACE WATER FILTER DRAIN TYPE 2 - PERFORATED PIPE LAID FLAT
- S38 SURFACE WATER MANHOLE
- S38 SURFACE WATER DRAIN
- S38 ATTENUATION PIPE
- S38 ROAD GULLY
- S38 HEADWALL
- ROAD GULLY
- ST — SW CHAMBER WITH MINIMUM 300mm DEEP SILT TRAP
- FC — FLOW CONTROL CHAMBER
- ATTENUATION TANK
- INDICATIVE RAINWATER HARVESTING TANK (RWH) - 3000 LITRES
- INDICATIVE RAINWATER HARVESTING TANK (RWH) - 10000 LITRES
- CHAMBER WITH FILTER AND SILT TRAP, I.E. SEL ENVIRONMENTAL WASP04320 (OR SIMILAR)
- BACKFALL — RWH HARVESTING TANK OVERFLOW TO BE CONNECTED WITH BACKFALL TO ACHIEVE CONNECTION LEVEL
- T — PROPRIETARY TREATMENT DEVICE (I.E. AQUA SWIRL FROM SDS OR SIMILAR)

KEY TO HEALTH AND SAFETY SYMBOLS

ABNORMAL OR UNUSUAL RESIDUAL RISKS ASSOCIATED WITH THE DESIGN OUTCOMES SHOWN ON THIS DRAWING MAYBE INDICATED BY MEANS OF THE FOLLOWING SYMBOLS.

- INDICATES A RESIDUAL RISK REQUIRING A COMPULSORY ACTION.
- INDICATES A RESIDUAL RISK FOR INFORMATION.
- INDICATES A RESIDUAL RISK REQUIRING A PROHIBITIVE ACTION.
- INDICATES A RESIDUAL RISK AS A WARNING.

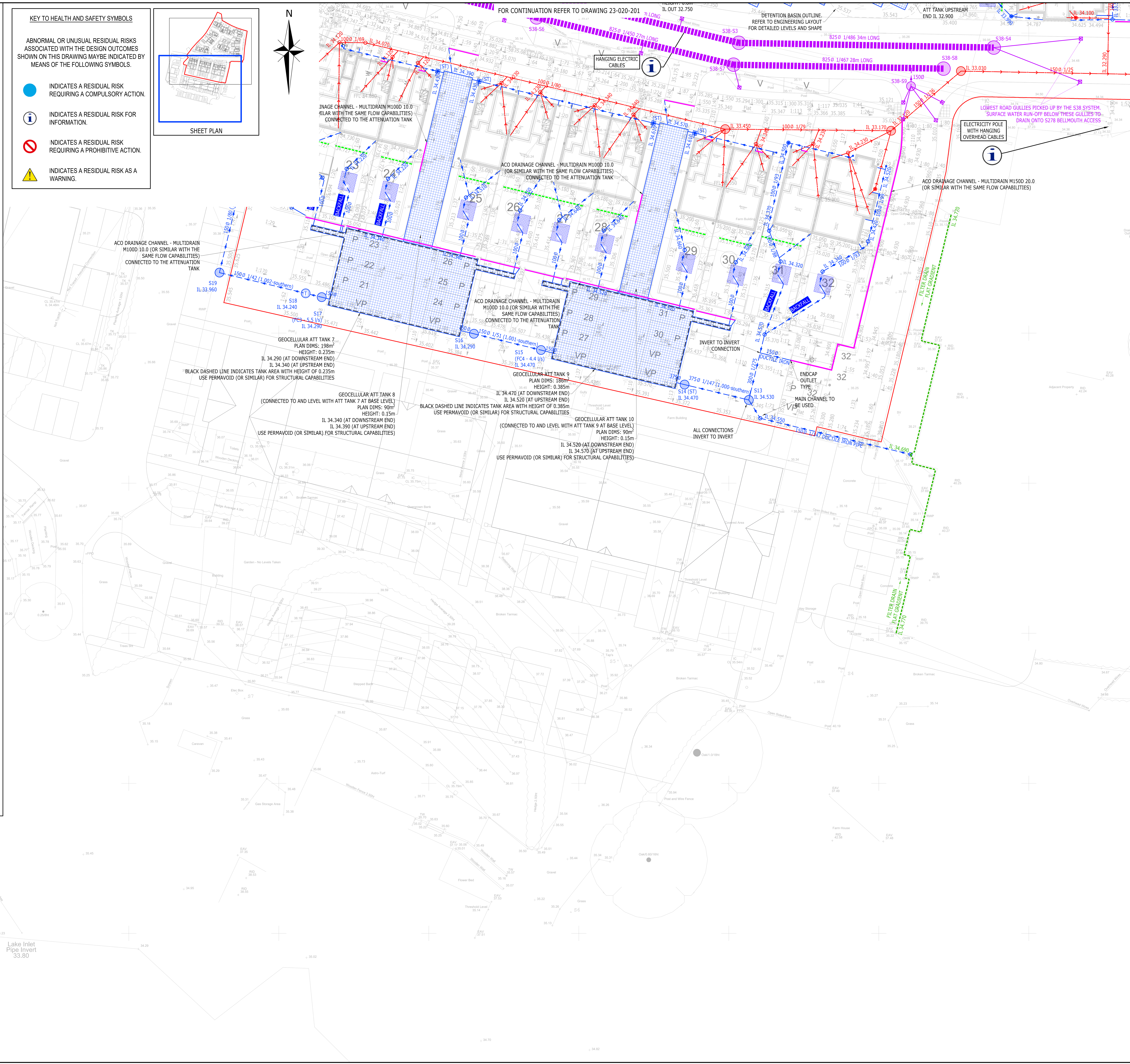

NOTES

1. CDM REGULATIONS 2015
(i) IN COMPLIANCE WITH CDM 2015 ODYSSEY HAS FOLLOWED IT'S DESIGN RISK MANAGEMENT PROCESS FOR HAZARD ELIMINATION AND RISK REDUCTION IN DEVELOPING THE ODYSSEY DESIGNS SHOWN ON THIS DRAWING.
(ii) THERE ARE EXISTING SERVICES AT OR CLOSE TO THE PROPOSED WORKS AND THESE ARE INDICATED ON DRAWING. ANY OTHER RESIDUAL RISKS ARE THOSE THAT WOULD NORMALLY BE EXPECTED BY COMPETENT PERSONS OR CONTRACTORS WITH NECESSARY SKILLS KNOWLEDGE AND EXPERIENCE TO BE ENGAGED ON WORK OF THIS NATURE OR TYPE.
2. THIS DRAWING IS TO BE READ IN CONJUNCTION WITH ALL OTHER RELATED DRAWINGS ISSUED BY THE ARCHITECT AND ENGINEER.
3. DO NOT SCALE FROM THIS DRAWING. WORK FROM FIGURED DIMENSIONS ONLY.
4. ALL DIMENSIONS SHOWN IN METRES UNLESS NOTED OTHERWISE.
5. IF THERE IS ANY AMBIGUITY BETWEEN THE SPECIFICATION AND THE DRAWINGS OR ANY OTHER DISCREPANCIES ARE FOUND THESE SHOULD BE REPORTED TO THE ENGINEER AND/OR CLIENT IMMEDIATELY SO THAT CLARIFICATION CAN BE SOUGHT PRIOR TO THE COMMENCEMENT OF WORK.
6. ALL DRAINAGE WORKS SUBJECT TO S104 AGREEMENT TO BE CARRIED OUT IN ACCORDANCE WITH THE SEWERAGE SECTOR GUIDANCE, DESIGN AND CONSTRUCTION GUIDANCE (CURRENT VERSION).
7. PRIVATE FOUL WATER AND SURFACE WATER DRAINAGE IS TO BE CONSTRUCTED IN ACCORDANCE WITH THE BUILDING REGULATIONS AND BS EN 752.
8. EXISTING LAND, DRAINAGE FEATURES AND GROUND LEVELS (SHOWN TO AN ORDNANCE DATUM) ARE BASED ON THE CLIENT's SUPPLIED TOPOGRAPHICAL SURVEY BY 'InCo Surveys' DATED DECEMBER 2020 (PROJECT No. S20264). ODYSSEY ASSUMES NO RESPONSIBILITY ON THE LEVEL OF ACCURACY OF SURVEY INFORMATION PROVIDED. THE CONTRACTOR IS TO CONFIRM THE EXISTING CONDITIONS MATCH THOSE SHOWN ON THE SURVEY AND INFORM ODYSSEY OF ANY DISCREPANCIES SHOULD THEY ARISE.
9. ALL CHAMBERS/MANHOLES IMMEDIATELY UPSTREAM OF ATTENUATION TANKS TO INCORPORATE SILT TRAP.
10. UNLESS SPECIFIED OTHERWISE ALL FOUL AND SURFACE WATER DRAINAGE PIPES TO BE 100mm DIA WITH MINIMUM GRADIENTS OF 1/80 (FOR FOUL) AND 1/100 (FOR SURFACE WATER) RESPECTIVELY.
11. FOR PIPES WHERE MINIMUM COVER IN ACCORDANCE WITH BUILDING REGULATIONS PART H TABLES 8 TO 10 IS NOT MET CONCRETE SLAB / CONCRETE SURROUND PROTECTION MUST BE ADDED OR DUCTILE IRON PIPES USED INSTEAD.
12. ALL RWP'S TO HAVE RODDING ACCESS.
13. FOR SVP's IT IS ASSUMED THAT THE INVERT OF THE TAIL OF THE BEND AT THE FOOT OF THE STACK WILL BE 0.45m BELOW FFL FOR ALL SINGLE DWELLINGS. FOR BLOCK OF FLATS THIS IS ASSUMED TO BE 0.75m BELOW FFL.
14. IT IS ASSUMED THAT ANY BRANCH DISCHARGE PIPE FOR SINGLE DWELLINGS WILL NOT DISCHARGE INTO A STACK LOWER THAN 450mm ABOVE THE INVERT OF THE TAIL OF THE BEND AT THE FOOT OF THE STACK. FOR BLOCK OF FLATS THIS IS ASSUMED TO BE 750mm.
15. PRIVATE INSPECTION CHAMBER SIZES ARE TO BE IN ACCORDANCE WITH THE NHBC STANDARDS SECTION 5.3, TABLES 3 AND 4 OR WHERE APPLICABLE BUILDING REGULATIONS PART H; TABLE 11 AND TABLE 12.
16. INSPECTION CHAMBERS LOCATED WITHIN AREAS OF BLOCK PAVING TO HAVE INSET/INFILL TYPE OF COVER.
17. ALL DRAINAGE TESTING REQUIRED IS TO BE CARRIED OUT AT THE CONTRACTORS EXPENSE.
18. DRAINS IN AREAS OF MADE GROUND TO BE CONSTRUCTED BY FIRST MAKING UP THE AREA TO APPROXIMATELY FINISHED LEVEL AND THEN EXCAVATE THROUGH THE FILL MATERIAL INTO UNDISTURBED GROUND. THE DRAIN TRENCH IS THEN TO BE BACKFILLED TO FORMATION LEVEL USING SUITABLE GRANULAR FILL MATERIAL WELL COMPACTED IN LAYERS NOT EXCEEDING 225 THICK.
19. CONTRACTOR TO SURVEY FOR AND LOCATE THE POSITION AND DEPTH OF ALL SERVICES ACROSS THE SITE BEFORE COMMENCING ANY WORKS.
20. STATUTORY SERVICE DIVERSION WORKS - IF DEEMED NECESSARY - TO BE AGREED WITH THE APPROPRIATE STATUTORY UNDERTAKER.
21. TREE PROTECTION PLAN MUST BE CONSULTED PRIOR TO DRAINAGE WORKS AND ANY POTENTIAL CLASHES REPORTED TO THE CLIENT / ENGINEER AND ARBORICULTURIST IMMEDIATELY.
22. FOR MANHOLE SCHEDULES REFER TO DRAWING 23-020-203.

FOR INFORMATION ONLY - NOT FOR CONSTRUCTION

Rev	Amendments	Drn	Chk	App	Date
A	UPDATES TO SOUTHERN PARCEL ATTENUATION SYSTEM	AK	SW	SW	29.01.24

ODYSSEY
Unit 1 Pucknall Farm
Dores Lane
Braishfield
Romsey SO51 0QJ
Telephone: 01794 537980
Fax: 01256 331134
E: info@odysseyconsult.co.uk
W: www.odysseyconsult.co.uk

Job Title
SUMNERS POND, CHAPEL ROAD, BARNS GREEN, HORSHAM

Drawing Title
DRAINAGE LAYOUT SHEET 2

Client
SIGMA HOMES

Scale	Date	Designed
1:250 @ A1	OCT 23	AK
Drawn	**Checked**	**Approved**
AK	SW	SW
Job No	**Drawing No**	**Rev**
23-020	23-020-202	A

P:\23-020 - Sumners Pond, Barns Green, Horsham\Tech\Acad\Drawings\23-020-201 Drainage Layout.dwg

NOTES:
1. FOR DRAINAGE LAYOUT REFER TO DRAWINGS 23-020-201 AND 23-020-202.
2. FOR PRIVATE MANHOLES CONSTRUCTION DETAILS REFER TO DRAWING 23-020-501.

FOUL WATER MANHOLE SCHEDULE

CHAMBER NUMBER	COVER LEVEL (CL)	INVERT LEVEL (IL)	PIPE DIAMETER (m)	COVER TO SOFFIT (m)	SIZE (m)	TYPE	COVER TYPE
F1	34.410	TBC	0.150	TBC	1.2 DIA	B (*)	D400
F2	34.600	32.350	0.150	2.100	1.2 DIA	B	D400
F3	34.640	32.260	0.150	2.230	1.2 DIA	B	D400
F4	34.350	32.120	0.150	2.080	1.2 DIA	B	D400
F5	34.390	32.060	0.150	2.180	1.2 DIA	B	B125
F6	34.100	31.970	0.150	1.980	1.2 DIA	B	D400
F7	34.050	31.880	0.150	2.020	1.2 DIA	B	D400
F8	33.900	31.700	0.150	2.050	1.2 DIA	B	D400
F9	33.400	31.590	0.150	1.660	1.2 DIA	B (*)	D400

(*) CHAMBER CONSTRUCTED ONLINE OF THE EXISTING CONNECTION, IL AS PER LEVEL OF THE INTERCEPTED CONNECTION. IL TBC AND REPORTED TO ENGINEER IF HIGHER THAN INDICATED IN TABLE AND ON DRAINAGE LAYOUT.

SURFACE WATER MANHOLE SCHEDULE

CHAMBER NUMBER	COVER LEVEL (CL)	INVERT LEVEL (IL)	PIPE DIAMETER (m)	COVER TO SOFFIT (m)	SIZE (m)	TYPE	COVER TYPE
S1	34.470	32.940	0.150	1.380	1.35 DIA	C (*)	D400
S2	33.980	32.820	0.225	0.935	1.35 DIA	C (*)	D400
S3	34.030	32.650	0.225	1.155	1.35 DIA	C (*)	D400
S4	34.130	32.600	0.225	1.305	1.35 DIA	C (*)	D400
S5	33.630	32.880	0.150	0.600	1.35 DIA	C (*)	D400
S6	34.720	33.923	0.100	0.697	1.35 DIA	C (**)	B125
S7	34.720	32.750	0.300	1.670	1.2 DIA	B	B125
S8	34.600	32.700	0.300	1.600	1.2 DIA	B (*)	D400
S9	34.220	32.600	0.225	1.395	1.35 DIA	C (*)	D400
S10	34.140	32.500	0.225	1.415	1.8 DIA	C (*)	D400
S11	34.600	33.020	0.150	1.430	1.35 DIA	B	D400
S12	33.920	32.400	0.225	1.295	1.35 DIA	C (**)	D400
S13	35.345	34.530	0.375	0.440	1.35 DIA	C	B125
S14	35.370	34.470	0.375	0.525	1.35 DIA	C (*)	D400
S15	35.490	34.470	0.150	0.870	1.35 DIA	C (**)	D400
S16	35.720	34.290	0.150	1.280	1.35 DIA	C	D400
S17	35.620	34.290	0.150	1.180	1.35 DIA	C	D400
S18	35.620	34.240	0.100	1.280	T	T	B125
S19	35.500	33.960	0.100	1.440	1.2 DIA	B	D400
S20	34.880	33.611	0.100	1.169	1.2 DIA	C	B125
S21	34.570	TBC	0.100	TBC	1.2 DIA	B	D400
S22	33.940	32.375	0.150	1.415	T	T	D400

(*) - CHAMBER TO INCORPORATE SILT TRAP (ST)
(**) - FLOW CONTROL (FC) CHAMBER
(T) - PROPRIETARY PRODUCT PROVIDING WATER TREATMENT ASPECT TO THE RUN-OFF, I.E. AQUASWIRL FROM SDS (OR SIMILAR PROVIDING APPROPRIATE SUDS MITIGATION INDICES)

S38 - SURFACE WATER MANHOLE SCHEDULE

CHAMBER NUMBER	COVER LEVEL (CL)	INVERT LEVEL (IL)	PIPE DIAMETER (m)	COVER TO SOFFIT (m)	SIZE (m)	COVER TYPE
S38-S1	34.550	33.350	0.600	0.600	1.8 DIA (*)	D400
S38-S2	34.900	33.410	0.825	0.665	1.8 DIA	D400
S38-S3	35.280	33.470	0.825	0.985	1.8 DIA	D400
S38-S4	34.970	33.540	0.825	0.605	1.8 DIA	D400
S38-S5	34.560	33.360	0.600	0.600	1.8 DIA	D400
S38-S6	34.900	33.420	0.825	0.655	1.8 DIA	D400
S38-S7	35.270	33.480	0.825	0.965	1.8 DIA	D400
S38-S8	35.250	33.540	0.825	0.885	1.8 DIA	D400
S38-S9	35.250	34.250	0.150	0.850	1.2 DIA	D400
S38-S10	34.400	33.450	0.225	0.725	1.2 DIA	D400

(*) - FLOW CONTROL MANHOLE (FC) WITH HYDROBRAKE.

S38 ORDINARY MANHOLES TO BE CONSTRUCTED TO THE WEST SUSSEX COUNTY COUNCIL STANDARD DRAWING No. S278/38/13 REV.E

S38 FLOW CONTROL MANHOLE TO BE CONSTRUCTED TO THE WEST SUSSEX COUNTY COUNCIL STANDARD DRAWING No. S278/38/14 REV.C

Rev	Amendments	Drn	Chk	App	Date
C	MANHOLES FOR SOUTHERN PARCEL ADDED	AK	SW	SW	29.01.24
B	S38 MANHOLE SCHEDULE NOTES UPDATED	AK	SW	SW	16.10.23
A	MANHOLE F1 DATA UPDATED	AK	SW	SW	10.10.23

ODYSSEY
Unit 1 Pucknall Farm
Dores Lane
Romsey
Hampshire SO51 0QJ
Telephone: 01794 537980
E: info@odysseyconsult.co.uk
W: www.odysseyconsult.co.uk

Job Title: SUMNERS POND, CHAPEL ROAD BARNS GREEN, HORSHAM

Drawing Title: MANHOLE SCHEDULES

Client: SIGMA HOMES

Scale	Date	Designed
NTS @A3	SEP 23	AK
Drawn	Checked	Approved
AK	SW	SW
Job No	Drawing No	Rev
23-020	23-020-203	C

P:\23-020 - Sumners Pond, Barns Green, Horsham\TechAcad\Drawings\23-020-203 MH Schedules.dwg



N

NOTES

1. THIS DRAWING IS TO BE READ IN CONJUNCTION WITH MICRODRAINAGE CALCULATIONS '23-020 - SUMNERS POND, BARNS GREEN_SW NORTHERN SYSTEM' AND '23-020 - SUMNERS POND, BARNS GREEN_SW SOUTHERN SYSTEM'.

LEGEND:

- CONTRIBUTING AREA
- SURFACE WATER (SW) NETWORK
- INDICATOR WHERE CONTRIBUTING AREA IS BEING ASSIGNED TO A SW NETWORK

FOR INFORMATION ONLY - NOT FOR CONSTRUCTION

Rev	Amendments	Drn	Chk	App	Date
B	SOUTHERN SYSTEM AMENDED	AK	SW	SW	29.01.24
A	SOUTHERN SYSTEM ADDED	AK	SW	SW	10.10.23

ODYSSEY
Unit I Pucknall Farm
Dores Lane
Brashfield
Romsey SO51 0QJ
Telephone: 01794 537980
Fax: 01256 331134
E: info@odysseyconsult.co.uk
W: www.odysseyconsult.co.uk

Job Title
SUMNERS POND, CHAPEL ROAD, BARNS GREEN, HORSHAM

Drawing Title
SURFACE WATER MODEL CATCHMENTS

Client
SIGMA HOMES

Scale	Date	Designed
1:250 @ A1	SEP 23	AK
Drawn	**Checked**	**Approved**
AK	SW	SW
Job No	**Drawing No**	**Rev**
23-020	23-020-205	B

P:\23-020 - Sumners Pond, Barns Green, Horsham\TechAcad\Drawings\23-020-205 Surface Water Model Catchments.dwg

LEGEND:

- SITE BOUNDARY
- INDICATIVE SURFACE WATER EXCEEDANCE ROUTE SHOULD DRAINAGE SYSTEM BECAME OVERLOADAED / BLOCKED
- 100mm WIDE SLOT CUT IN THE WALL (AT GROUND LEVEL) TO ALLOW PASSAGE OF EXCEEDANCE FLOWS
- EXPOSED BRICKWORK
- RAISED DPC
- 1:29 SURFACE GRADIENT
- 33.751+ PROPOSED LEVEL
- FFL 34.200 PROPOSED FINISHED FLOOR LEVEL
- BANKING - 1 IN 3 (MAX) TO 1 IN 10 (MIN)
- PROPOSED FENCE TO LANDSCAPE ARCHITECT DETAILS
- FACING BRICK SCREEN WALL TO LANDSCAPE ARCHITECT DETAILS
- SURFACE WATER DRAINAGE CHANNEL I.E ACO M100D 0.0 (OR SIMILAR APPROVED) OR AS PER NOTE IF DIFFERENT
- ROAD GULLY

N

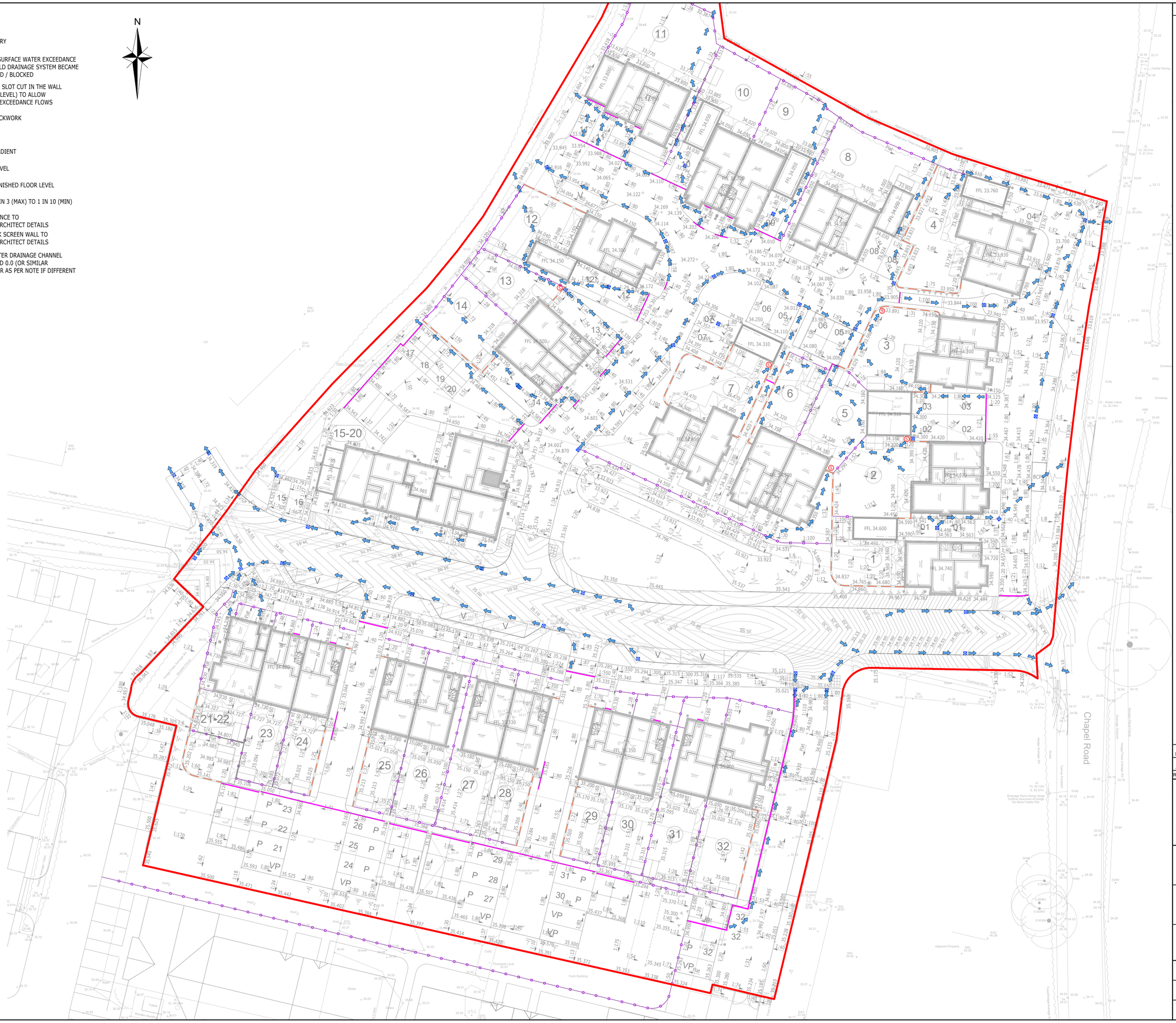

NOTES

1. THIS DRAWING IS TO BE READ IN CONJUNCTION WITH ALL OTHER RELATED DRAWINGS ISSUED BY THE ARCHITECT AND ENGINEER.
2. IN THE EVENT OF DRAINAGE FAILURE FLOWS WOULD BE TAKEN AWAY FROM THE DWELLINGS AS SHOWN BY THE EXCEEDANCE ROUTES.
3. MINOR PONDING MAY OCCUR IN SOME INSTANCES.
4. EXISTING LAND, DRAINAGE FEATURES AND GROUND LEVELS (SHOWN TO AN ORDNANCE DATUM) ARE BASED ON THE CLIENT'S SUPPLIED TOPOGRAPHICAL SURVEY BY 'InCo Surveys' DATED DECEMBER 2020 (PROJECT No. S20264). ODYSSEY ASSUMES NO RESPONSIBILITY ON THE LEVEL OF ACCURACY OF SURVEY INFORMATION PROVIDED. THE CONTRACTOR IS TO CONFIRM THE EXISTING CONDITIONS MATCH THOSE SHOWN ON THE SURVEY AND INFORM ODYSSEY OF ANY DISCREPANCIES SHOULD THEY ARISE.
5. FOR ANY SCREEN WALL SPECIFICATIONS / DESIGNS REFER TO STRUCTURAL ENGINEER DETAILS.
6. CONTOURS SHOWN ON THIS DRAWING ARE AT 25 mm VERTICAL INTERVALS.

FOR INFORMATION ONLY - NOT FOR CONSTRUCTION

Rev	Amendments	Drn	Chk	App	Date
B	SOUTHERN PARCEL DRAINAGE REVISED	AK	SW	SW	29.01.24
A	SOUTHERN PARCEL DRAINAGE UPDATED	AK	SW	SW	10.10.23

ODYSSEY

Unit 1 Pucknall Farm
Dores Lane
Braishfield
Romsey SO51 0QJ

Telephone: 01794 537690
Fax: 01256 331134
E: info@odysseyconsult.co.uk
W: www.odysseyconsult.co.uk

Job Title
SUMNERS POND, CHAPEL ROAD, BARNS GREEN, HORSHAM

Drawing Title
EXCEEDANCE ROUTES LAYOUT

Client
SIGMA HOMES

Scale	Date	Designed
1:250 @ A1	AUG 23	AK
Drawn	Checked	Approved
AK	SW	SW
Job No	Drawing No	Rev
23-020	23-020-210	B

P:\23-020 - Sumners Pond, Barns Green, Horsham\Tech\Acad\Drawings\23-020-210 Exceedance Routes Layout.dwg

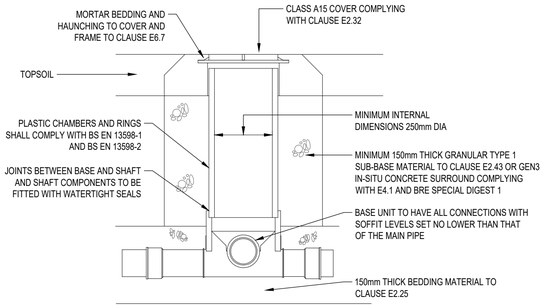

TYPICAL INSPECTION CHAMBER - IC4

SITED IN DOMESTIC GARDENS (MAX DEPTH TO INVERT 600mm)

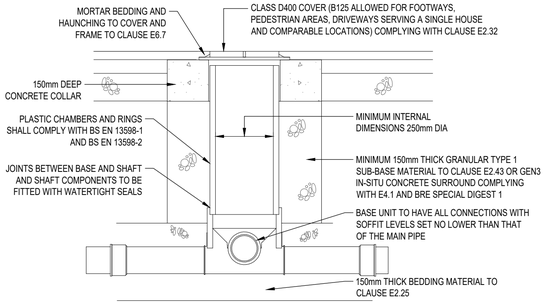

TYPICAL INSPECTION CHAMBER - IC4

SITED IN DRIVEWAYS/PAVED AREAS (MAX DEPTH TO INVERT 600mm)

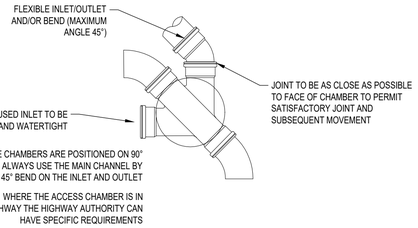

TYPICAL INSPECTION CHAMBER - IC4

PLAN VIEW

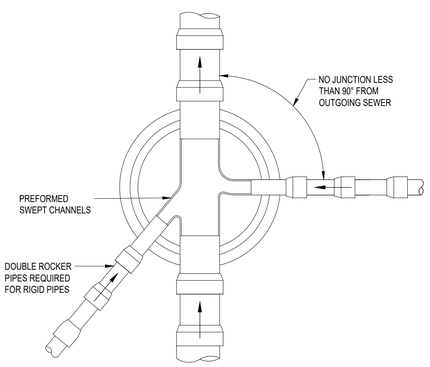

RIGID PIPES BUILT INTO MANHOLE SHOULD HAVE A FLEXIBLE JOINT AS CLOSE AS FEASIBLE TO THE EXTERNAL FACE OF THE STRUCTURE AND THE LENGTH OF THE NEXT ROCKER PIPE SHOULD BE SHOWN

NOMINAL DIAMETER (mm)	MAXIMUM EFFECTIVE LENGTH (m)
150 - 600	0.6
601 - 750	1.00
OVER 750	1.25

ALL PIPES ENTERING THE BOTTOM OF THE MANHOLE TO HAVE SOFFITS LEVEL

TYPICAL ARRANGEMENT OF PIPE JUNCTIONS WITHIN MANHOLES

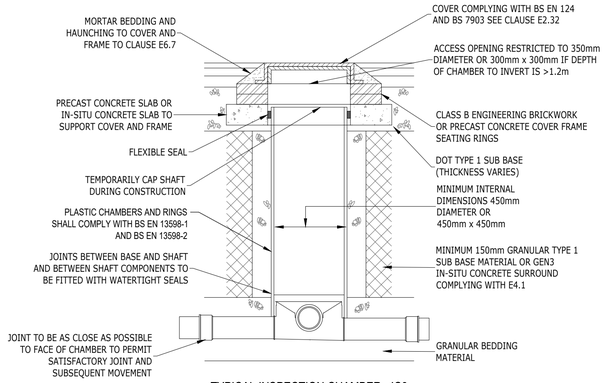

TYPICAL INSPECTION CHAMBER - IC3

SITED IN AREAS SUBJECT TO VEHICLE LOADING

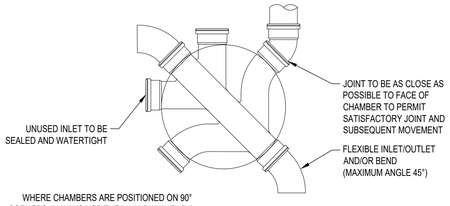

WHERE CHAMBERS ARE POSITIONED ON 90° CORNERS, ALWAYS USE THE MAIN CHANNEL BY FITTING A 45° BEND ON THE INLET AND OUTLET

NOTE: WHERE THE ACCESS CHAMBER IS IN THE HIGHWAY THE HIGHWAY AUTHORITY CAN HAVE SPECIFIC REQUIREMENTS

TYPICAL INSPECTION CHAMBER - IC3

PLAN VIEW

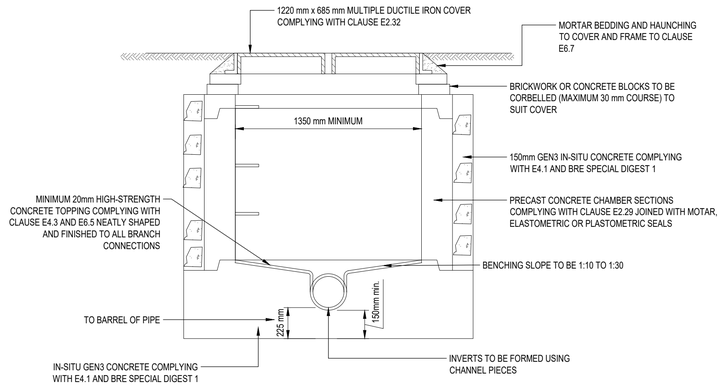

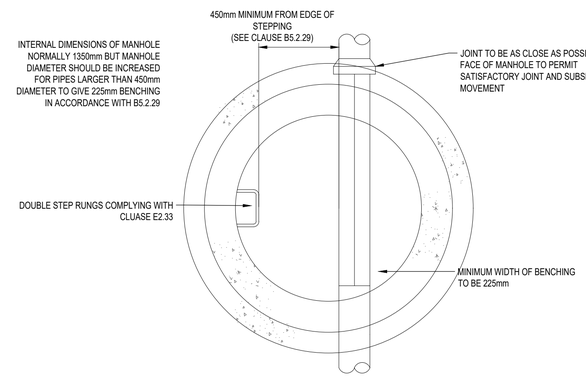

TYPICAL PRE-CAST CONCRETE (PCC) RINGS CONCRETE MANHOLE - TYPE C

DEPTH FROM COVER LEVEL TO SOFFIT OF PIPE LESS THAN 1.5m

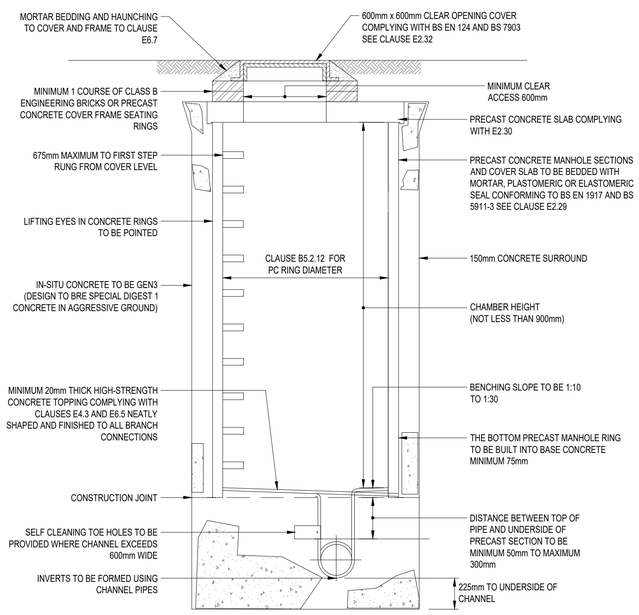

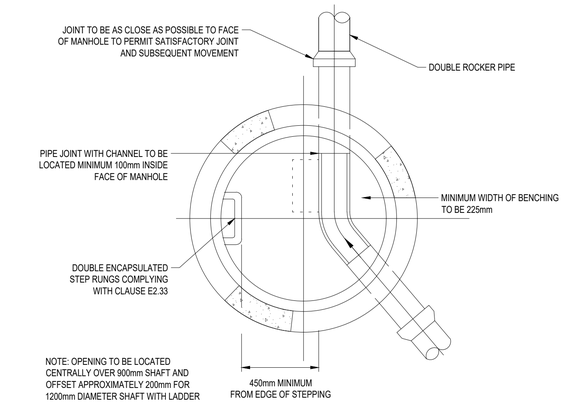

TYPICAL PRE-CAST CONCRETE (PCC) RINGS MANHOLE - TYPE B

DEPTH FROM COVER LEVEL TO SOFFIT OF PIPE 1.5m TO 3m

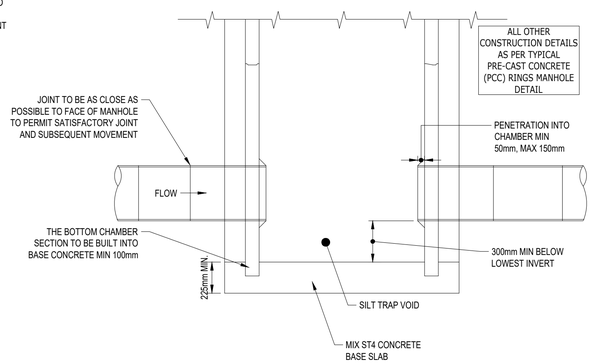

TYPICAL PCC RINGS SILT TRAP DETAIL

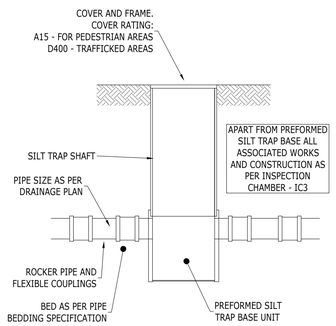

TYPICAL PLASTIC SILT TRAP DETAIL

NOTES

1. THIS DRAWING IS TO BE READ IN CONJUNCTION WITH ALL OTHER RELATED DRAWINGS AND SPECIFICATIONS ISSUED BY THE ARCHITECT, ENGINEER, SIGMA HOMES SPECIFICATIONS AND NHBC STANDARDS.
2. IF THERE IS ANY AMBIGUITY BETWEEN THE SPECIFICATION AND THE DRAWINGS OR ANY OTHER DISCREPANCIES ARE FOUND THESE SHOULD BE REPORTED TO THE ENGINEER AND/OR CLIENT IMMEDIATELY SO THAT CLARIFICATION CAN BE SOUGHT PRIOR TO THE COMMENCEMENT OF WORK.
3. ANY SOFT SPOTS TO BE REMOVED AND REPLACED WITH TYPE 1 MATERIAL OR ENGINEER APPROVED MATERIAL.
4. DIMENSIONS ARE IN MILLIMETRES UNLESS NOTED OTHERWISE.
5. WHERE GROUND CONDITIONS DICTATE CONCRETE TO BE SULPHATE RESISTANT.
6. ALL PIPES ENTERING INSPECTION CHAMBER / MANHOLE OR OTHER STRUCTURE TO INCORPORATE ROCKER PIPES MIN. 600mm LONG AND FLEXIBLE JOINTS.
7. DRAINS TO BE CONSTRUCTED UNDER DWELLINGS WITH SUSPENDED FLOOR SLABS SHOULD EITHER BE INSTALLED USING A PROPRIETARY HANGER SYSTEM WHERE "BEAM AND POT" OR SIMILAR CONSTRUCTION IS USED, OR SHOULD BE CAST INTO LOCAL SLAB THICKENING WHERE REINFORCED CONCRETE GROUND SLABS ARE TO BE POURED IN SITU.
8. PIPE LAYING IN MADE / SOFT GROUND
   WHERE THE TRENCH FORMATION HAS LITTLE BEARING STRENGTH AND THEREFORE WILL NOT SUPPORT PIPE BEDDING MATERIAL EFFECTIVELY, IT IS NECESSARY TO PROVIDE A STABLE FORMATION BEFORE PIPE LAYING. SUCH CONDITIONS MOST COMMONLY OCCUR IN PEAT, SILTY GROUND, SOFT TO VERY ALLUVIAL CLAYS, RUNNING SAND OR IN ARTIFICIALLY FILLED GROUND. THE TRENCH FORMATIONS AND MANHOLE BASE SHOULD BE OVER-EXCAVATED BY 600-800MM, DEPENDING ON THE BEARING STRENGTH OF THE GROUND. GRAVEL REJECT MATERIAL OR SMALL HARDCORE, LESS THAN 75MM, IS THEN COMPACTED IN LAYERS TO FORM A FIRM TRENCH BOTTOM. A 50MM THICKNESS OF LEAN-MIX CONCRETE IS THEN PLACED AS BINDING. THE PIPE IS THEN LAID ON GRANULAR BEDDING MATERIAL. THE PIPE BEDDING CONSTRUCTION REQUIREMENTS ARE CALCULATED IN THE NORMAL WAY, BUT IT IS IMPORTANT THAT 'WIDE TRENCH' DESIGN CRITERIA ARE USED BECAUSE 'NARROW TRENCH' CONDITIONS CANNOT BE GUARANTEED IN THIS SITUATION.

Rev	Amendments	Drn	Chk	App	Date

ODYSSEY
Unit 1 Pucknall Farm
Dores Lane
Braishfield
Romsey SO51 0QJ
Telephone: 01794 537980
Fax: 01256 331134
E: info@odysseyconsult.co.uk
W: www.odysseyconsult.co.uk

Job Title

SUMNERS POND, CHAPEL ROAD, BARNS GREEN, HORSHAM

Drawing Title

DRAINAGE CONSTRUCTION DETAILS - SHEET 1

Client

SIGMA HOMES

Scale	Date	Designed
N.T.S. @ A1	SEP 23	AK
Drawn	Checked	Approved
JK	SW	SW
Job No	Drawing No	Rev
23-020	23-020-501	-

P:\23-020 - Sumners Pond, Barns Green, Horsham\Tech\Acad\Drawings\23-020-501 Drainage Construction Details.dwg

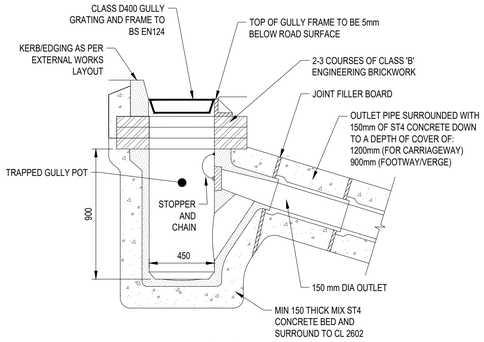

TRAPPED PRIVATE ROAD GULLY WITH SPIGOT OUTLET

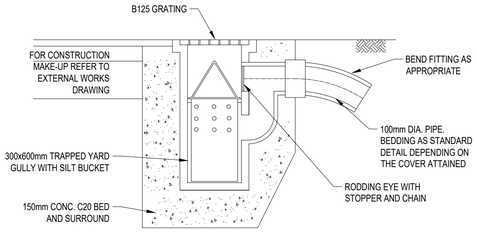

TRAPPED YARD GULLY TO DRIVES WHERE SPECIFIED

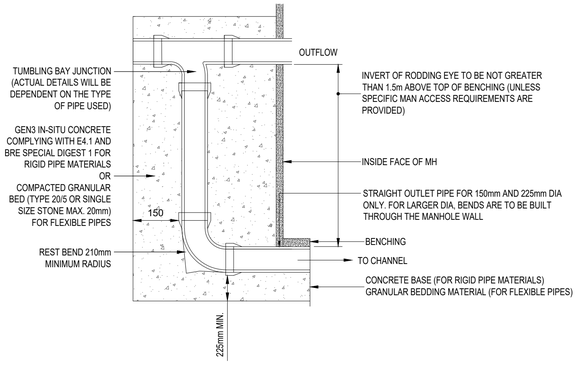

EXTERNAL VERTICAL BACKDROP

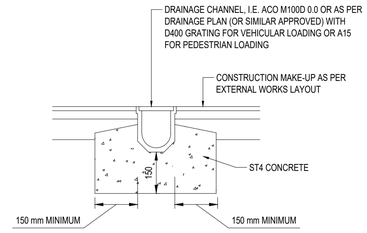

SURFACE WATER DRAINAGE CHANNEL

NOTES

1. THIS DRAWING IS TO BE READ IN CONJUNCTION WITH ALL OTHER RELATED DRAWINGS AND SPECIFICATIONS ISSUED BY THE ARCHITECT, ENGINEER, SIGMA HOMES SPECIFICATIONS AND NHBC STANDARDS.
2. IF THERE IS ANY AMBIGUITY BETWEEN THE SPECIFICATION AND THE DRAWINGS OR ANY OTHER DISCREPANCIES ARE FOUND THESE SHOULD BE REPORTED TO THE ENGINEER AND/OR CLIENT IMMEDIATELY SO THAT CLARIFICATION CAN BE SOUGHT PRIOR TO THE COMMENCEMENT OF WORK.
3. ANY SOFT SPOTS TO BE REMOVED AND REPLACED WITH TYPE 1 MATERIAL OR ENGINEER APPROVED MATERIAL.
4. DIMENSIONS ARE IN MILLIMETRES UNLESS NOTED OTHERWISE.
5. WHERE GROUND CONDITIONS DICTATE CONCRETE TO BE SULPHATE RESISTANT.
6. ALL PIPES ENTERING INSPECTION CHAMBER / MANHOLE OR OTHER STRUCTURE TO INCORPORATE ROCKER PIPES MIN. 600mm LONG AND FLEXIBLE JOINTS.
7. DRAINS TO BE CONSTRUCTED UNDER DWELLINGS WITH SUSPENDED FLOOR SLABS SHOULD EITHER BE INSTALLED USING A PROPRIETARY HANGER SYSTEM WHERE "BEAM AND POT" OR SIMILAR CONSTRUCTION IS USED, OR SHOULD BE CAST INTO LOCAL SLAB THICKENING WHERE REINFORCED CONCRETE GROUND SLABS ARE TO BE POURED IN SITU.
8. PIPE LAYING IN MADE / SOFT GROUND
   WHERE THE TRENCH FORMATION HAS LITTLE BEARING STRENGTH AND THEREFORE WILL NOT SUPPORT PIPE BEDDING MATERIAL EFFECTIVELY, IT IS NECESSARY TO PROVIDE A STABLE FORMATION BEFORE PIPE LAYING. SUCH CONDITIONS MOST COMMONLY OCCUR IN PEAT, SILTY GROUND, SOFT TO VERY ALLUVIAL CLAYS, RUNNING SAND OR IN ARTIFICIALLY FILLED GROUND. THE TRENCH FORMATIONS AND MANHOLE BASE SHOULD BE OVER-EXCAVATED BY 600-800MM, DEPENDING ON THE BEARING STRENGTH OF THE GROUND. GRAVEL REJECT MATERIAL OR SMALL HARDCORE, LESS THAN 75MM, IS THEN COMPACTED IN LAYERS TO FORM A FIRM TRENCH BOTTOM. A 50MM THICKNESS OF LEAN-MIX CONCRETE IS THEN PLACED AS BINDING. THE PIPE IS THEN LAID ON GRANULAR BEDDING MATERIAL. THE PIPE BEDDING CONSTRUCTION REQUIREMENTS ARE CALCULATED IN THE NORMAL WAY, BUT IT IS IMPORTANT THAT 'WIDE TRENCH' DESIGN CRITERIA ARE USED BECAUSE 'NARROW TRENCH' CONDITIONS CANNOT BE GUARANTEED IN THIS SITUATION.

RODDING EYE DETAIL

RAINWATER PIPE CONNECTION

SOIL VENT PIPE CONNECTION

FILTER DRAIN - TYPE 1

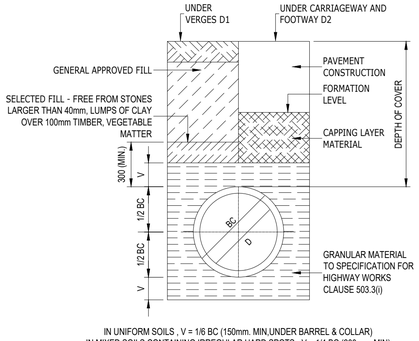

BEDDING DETAIL - CLASS 'S'

DESIGN D1 (UNDER VERGES >900 COVER OR UNDER PEDESTRIAN AREAS >600 COVER)
DESIGN D2 (UNDER CARRIAGEWAYS >1200 COVER)

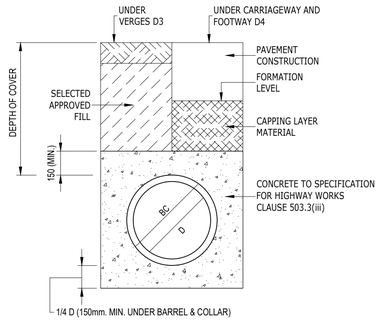

BEDDING DETAIL - CLASS 'Z'

DESIGN D3 (UNDER VERGES <900 COVER)
DESIGN D4 (UNDER CARRIAGEWAYS <1200 COVER)

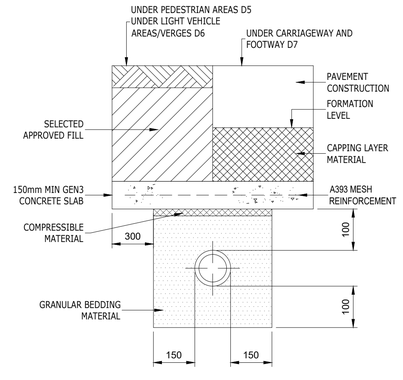

CONCRETE PAD PROTECTION

DESIGN D5 (UNDER PEDESTRIAN AREAS <600 COVER)
DESIGN D6 (UNDER VERGES, LIGHT VEHICLE AREAS <900 COVER)
DESIGN D7 (UNDER CARRIAGEWAYS <1200 COVER)

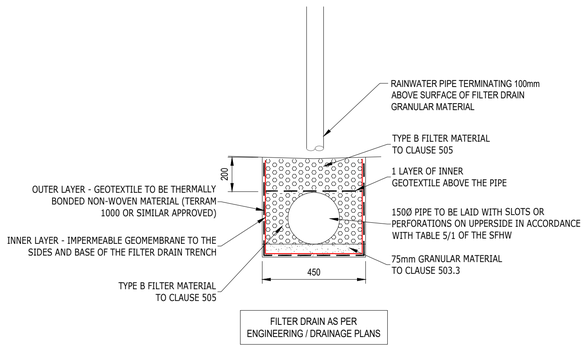

FILTER DRAIN - TYPE 2

Rev	Amendments	Dm	Chk	App	Date
A	FILTER DRAIN DETAIL UPDATED, FILTER DRAIN TYPE 2 DETAIL ADDED	AK	SW	SW	10.10.23

ODYSSEY
Unit 1 Pucknall Farm
Dores Lane
Braishfield
Romsey SO51 9QJ
Telephone: 01794 537980
Fax: 01256 331134
E: info@odysseyconsult.co.uk
W: www.odysseyconsult.co.uk

Job Title
SUMNERS POND, CHAPEL ROAD, BARNS GREEN, HORSHAM

Drawing Title
DRAINAGE CONSTRUCTION DETAILS - SHEET 2

Client
SIGMA HOMES

Scale	Date	Designed
N.T.S. @ A1	SEP 23	AK
Drawn	Checked	Approved
JK	SW	SW
Job No	Drawing No	Rev
23-020	23-020-502	A

P:\23-020 - Summers Pond, Barns Green, Horsham\Tech\Acad\Drawings\23-020-501 Drainage Construction Details.dwg

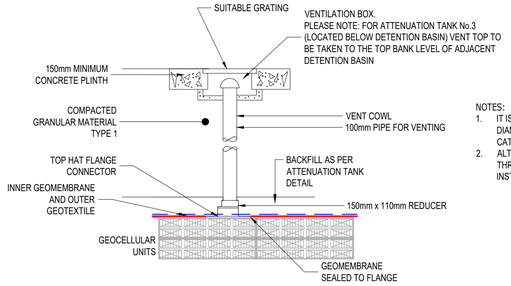

NOTES:
1. IT IS RECOMMENDED THAT ONE VENT PIPE, 110mm IN DIAMETER, IS PROVIDED PER 7,500 m² OF IMPERMEABLE CATCHMENT AREA ON A SITE.
2. ALTERNATIVE VENTING COULD BE IN A FORM OF AN AIR VENT THROUGH MANHOLE (REFER TO MANUFACTURER'S INSTALLATION METHODS).

VENT PIPE DETAIL

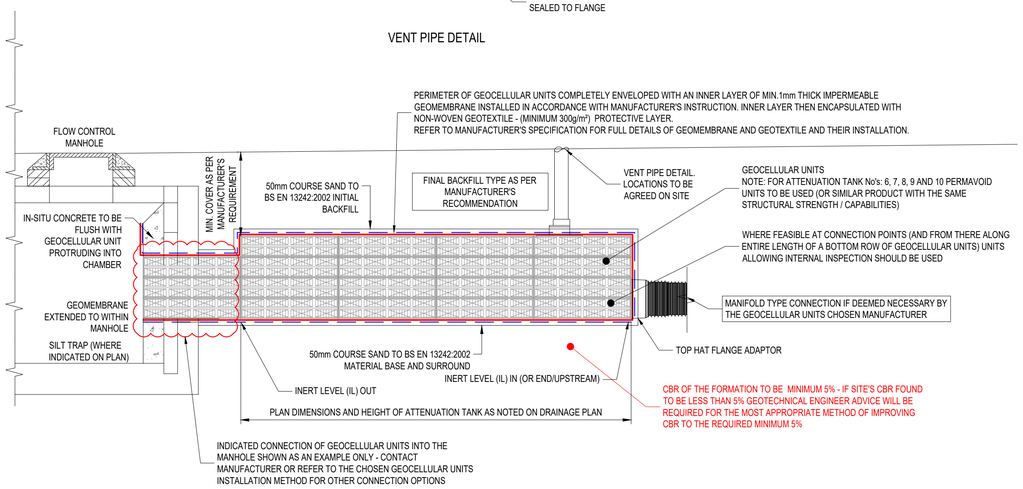

TYPICAL SECTION THROUGH GEOCELLULAR STORAGE ATTENUATION TANK

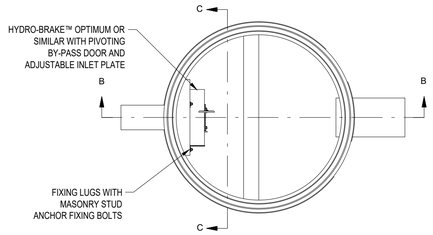

PLAN ON FLOW CONTROL / HYDROBRAKE MANHOLES

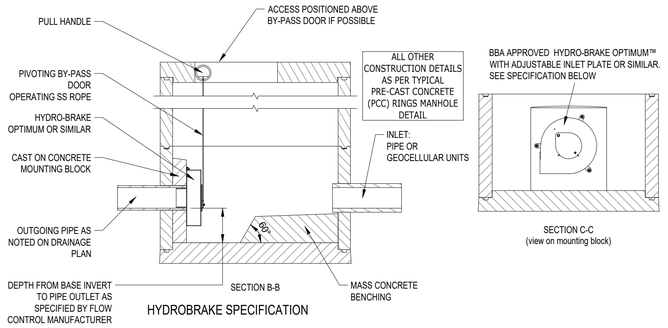

HYDROBRAKE SPECIFICATION

FLOW CONTROL FC (MH S38-S1):
FLOW CONTROL TYPE - HYDRO-BRAKE® Optimum
FLOW CONTROL REF - MD-SHE-0089-3500-1015-3500
DESIGN HEAD - 1.015 m
DESIGN FLOW - 3.5 l/s
FLOW CONTROL IL - 33.350

FLOW CONTROL FC1 (MH S12):
FLOW CONTROL TYPE - HYDRO-BRAKE® Optimum
FLOW CONTROL REF - MD-SHE-0093-4000-1100-4000
DESIGN HEAD - 1.1 m
DESIGN FLOW - 4.0 l/s
FLOW CONTROL IL - 32.400

FLOW CONTROL FC2 (MH S6):
FLOW CONTROL TYPE - HYDRO-BRAKE® Optimum
FLOW CONTROL REF - MD-SHE-0038-5000-0500-5000
DESIGN HEAD - 0.5 m
DESIGN FLOW - 0.5 l/s
FLOW CONTROL IL - 33.923

FLOW CONTROL FC3 (MH S17):
FLOW CONTROL TYPE - HYDRO-BRAKE® Optimum
FLOW CONTROL REF - MD-SHE-0117-5500-0500-5500
DESIGN HEAD - 0.5 m
DESIGN FLOW - 5.5 l/s
FLOW CONTROL IL - 34.290

FLOW CONTROL FC4 (MH S15):
FLOW CONTROL TYPE - HYDRO-BRAKE® Optimum
FLOW CONTROL REF - MD-SHE-0107-4400-0450-4400
DESIGN HEAD - 0.45 m
DESIGN FLOW - 4.4 l/s
FLOW CONTROL IL - 34.470

FLOW CONTROL MANHOLE DETAIL

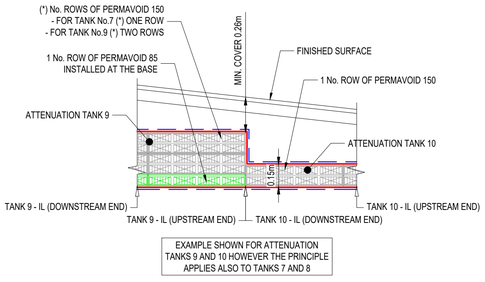

SKETCH OF STORAGE ATTENUATION TANK WITH VARYING TANK DEPTHS

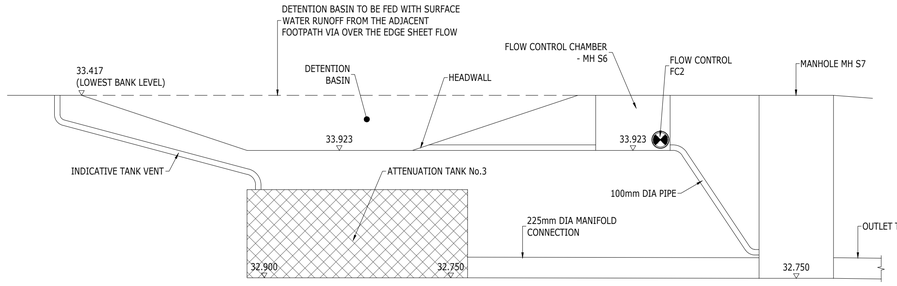

ATTENUATION TANK No.3 AND DETENTION BASIN
GENERAL ARRANGEMENT

NOTES:
1. ISOMETRIC DRAWING IS FOR REFERENCE ONLY, DETAILS MAY NOT ACCURATELY REPRESENT ACTUAL DESIGN. PLEASE SEE DETAILED VIEWS FOR TECHNICAL INFORMATION
2. PLEASE REFER TO THE MANUFACTURER'S INSTALLATION GUIDE FOR ENABLING WORKS AND FULL INSTALLATION METHOD.
3. OTHER TYPE HEADWALL MIGHT BE MORE SUITABLE DEPENDING ON THE SITE CONDITIONS AND THIS SHOULD BE CONFIRMED BY THE COMPETENT GROUNDWORKER AND RELAYED TO THE CLIENT AND ENGINEER PRIOR TO CONSTRUCTION WORKS.

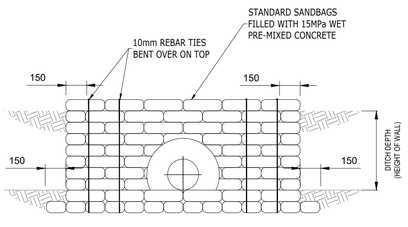

BAGWORK HEADWALL DETAIL
(N.T.S)

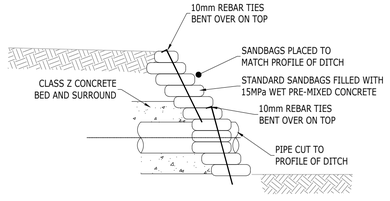

SECTION THROUGH BAGWORK HEADWALL
(N.T.S)

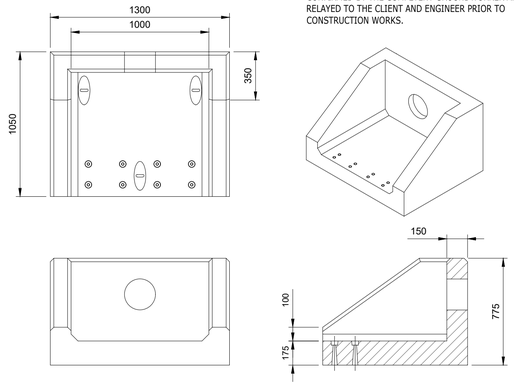

TYPICAL PRECAST HEADWALL DETAIL
(ALTHON RSFA 11A SHOWN)

NOTES

1. THIS DRAWING IS TO BE READ IN CONJUNCTION WITH ALL OTHER RELATED DRAWINGS AND SPECIFICATIONS ISSUED BY THE ARCHITECT, ENGINEER, SIGMA HOMES SPECIFICATIONS AND NHBC STANDARDS.
2. IF THERE IS ANY AMBIGUITY BETWEEN THE SPECIFICATION AND THE DRAWINGS OR ANY OTHER DISCREPANCIES ARE FOUND THESE SHOULD BE REPORTED TO THE ENGINEER AND/OR CLIENT IMMEDIATELY SO THAT CLARIFICATION CAN BE SOUGHT PRIOR TO THE COMMENCEMENT OF WORK.
3. ANY SOFT SPOTS TO BE REMOVED AND REPLACED WITH TYPE 1 MATERIAL OR ENGINEER APPROVED MATERIAL.
4. DIMENSIONS ARE IN MILLIMETRES UNLESS NOTED OTHERWISE.
5. WHERE GROUND CONDITIONS DICTATE CONCRETE TO BE SULPHATE RESISTANT.
6. ALL PIPES ENTERING INSPECTION CHAMBER / MANHOLE OR OTHER STRUCTURE TO INCORPORATE ROCKER PIPES MIN. 600mm LONG AND FLEXIBLE JOINTS.
7. DRAINS TO BE CONSTRUCTED UNDER DWELLINGS WITH SUSPENDED FLOOR SLABS SHOULD EITHER BE INSTALLED USING A PROPRIETARY HANGER SYSTEM WHERE "BEAM AND POT" OR SIMILAR CONSTRUCTION IS USED, OR SHOULD BE CAST INTO LOCAL SLAB THICKENING WHERE REINFORCED CONCRETE GROUND SLABS ARE TO BE POURED IN SITU.
8. PIPE LAYING IN MADE / SOFT GROUND
WHERE THE TRENCH FORMATION HAS LITTLE BEARING STRENGTH AND THEREFORE WILL NOT SUPPORT PIPE BEDDING MATERIAL EFFECTIVELY, IT IS NECESSARY TO PROVIDE A STABLE FORMATION BEFORE PIPE LAYING. SUCH CONDITIONS MOST COMMONLY OCCUR IN PEAT, SILTY GROUND, SOFT TO VERY ALLUVIAL CLAYS, RUNNING SAND OR IN ARTIFICIALLY FILLED GROUND. THE TRENCH FORMATIONS AND MANHOLE BASE SHOULD BE OVER-EXCAVATED BY 600-800MM, DEPENDING ON THE BEARING STRENGTH OF THE GROUND. GRAVEL REJECT MATERIAL OR SMALL HARDCORE, LESS THAN 75MM, IS THEN COMPACTED IN LAYERS TO FORM A FIRM TRENCH BOTTOM. A 50MM THICKNESS OF LEAN-MIX CONCRETE IS THEN PLACED AS BINDING. THE PIPE IS THEN LAID ON GRANULAR BEDDING MATERIAL. THE PIPE BEDDING CONSTRUCTION REQUIREMENTS ARE CALCULATED IN THE NORMAL WAY, BUT IT IS IMPORTANT THAT 'WIDE TRENCH' DESIGN CRITERIA ARE USED BECAUSE 'NARROW TRENCH' CONDITIONS CANNOT BE GUARANTEED IN THIS SITUATION.

Rev	Amendments	Drn	Chk	App	Date
B	VARYING DEPTH ATTENUATION TANK SKETCH ADDED, FLOW CONTROL SPEC UPDATED	AK	SW	SW	30.01.24
A	FLOW CONTROL DETAIL UPDATED	AK	SW	SW	16.10.23

ODYSSEY
Unit 1 Pucknall Farm
Dores Lane
Braishfield
Romsey SO51 9QJ
Telephone: 01794 537980
Fax: 01256 331134
E: info@odysseyconsult.co.uk
W: www.odysseyconsult.co.uk

Job Title
SUMNERS POND, CHAPEL ROAD, BARNS GREEN, HORSHAM

Drawing Title
DRAINAGE CONSTRUCTION DETAILS - SHEET 3

Client
SIGMA HOMES

Scale	Date	Designed
N.T.S. @ A1	SEP 23	AK
Drawn	Checked	Approved
JK	SW	SW
Job No	Drawing No	Rev
23-020	23-020-503	B

P:\23-020 - Sumners Pond, Barns Green, Horsham\Tech\Acad\Drawings\23-020-501 Drainage Construction Details.dwg

Appendix 2

Current Drainage Calculations


11
10
9
8
4
12
13
14
15-20
7
6
5
3
2
1
BCP

Tuscany House White Hart Lane Basingstoke RG21 4AF	SW System_Northern Rev.A
Date 25/01/2024 15:39 File 23-020 - Sumners Pond.MDX	Designed by AK Checked by
Micro Drainage	Network 2020.1.3

STORM SEWER DESIGN by the Modified Rational Method

Design Criteria for Storm_Northern_RevA

Pipe Sizes STANDARD Manhole Sizes STANDARD

FSR Rainfall Model - England and Wales

Return Period (years)	30	Foul Sewage (l/s/ha)	0.000	Maximum Backdrop Height (m)	1.500
M5-60 (mm)	20.000	Volumetric Runoff Coeff.	0.750	Min Design Depth for Optimisation (m)	1.200
Ratio R	0.355	PIMP (%)	100	Min Vel for Auto Design only (m/s)	1.00
Maximum Rainfall (mm/hr)	0	Add Flow / Climate Change (%)	10	Min Slope for Optimisation (1:X)	500
Maximum Time of Concentration (mins)	30	Minimum Backdrop Height (m)	0.200		

Designed with Level Soffits

Time Area Diagram for Storm_Northern_RevA

Time (mins)	Area (ha)	Time (mins)	Area (ha)
0-4	0.266	4-8	0.068

Total Area Contributing (ha) = 0.333

Total Pipe Volume (m³) = 6.979

Network Design Table for Storm_Northern_RevA

PN	Length (m)	Fall (m)	Slope (1:X)	I.Area (ha)	T.E. (mins)	Base Flow (l/s)	k (mm)	HYD SECT	DIA (mm)	Section Type	Auto Design
S1.000	24.000	0.120	200.0	0.020	4.00	0.0	0.600	o	225	Pipe/Conduit	

Network Results Table

PN	Rain (mm/hr)	T.C. (mins)	US/IL (m)	Σ I.Area (ha)	Σ Base Flow (l/s)	Foul (l/s)	Add Flow (l/s)	Vel (m/s)	Cap (l/s)	Flow (l/s)
S1.000	0.00	4.43	32.940	0.020	0.0	0.0	0.0	0.92	36.6	0.0

©1982-2020 Innovyze

Network Design Table for Storm_Northern_RevA

PN	Length (m)	Fall (m)	Slope (1:X)	I.Area (ha)	T.E. (mins)	Base Flow (l/s)	k (mm)	HYD SECT	DIA (mm)	Section Type	Auto Design
S1.001	29.023	0.170	170.7	0.070	0.00	0.0	0.600	o	225	Pipe/Conduit	
S1.002	8.156	0.050	163.1	0.002	0.00	0.0	0.600	o	225	Pipe/Conduit	
S1.003	17.586	0.100	175.9	0.033	0.00	0.0	0.600	o	225	Pipe/Conduit	
S2.000	1.429	0.177	8.1	0.000	4.00	0.0	0.600	o	100	Pipe/Conduit	
S2.001	3.000	0.038	80.0	0.000	0.00	0.0	0.600	o	100	Pipe/Conduit	
S2.002	5.831	0.050	116.6	0.032	0.00	0.0	0.600	o	300	Pipe/Conduit	
S2.003	27.000	0.100	270.0	0.053	0.00	0.0	0.600	oo	225	Double Pipe	
S2.004	10.388	0.100	103.9	0.050	0.00	0.0	0.600	o	225	Pipe/Conduit	
S1.004	17.000	0.100	170.0	0.019	0.00	0.0	0.600	o	225	Pipe/Conduit	
S3.000	5.211	0.525	9.9	0.012	4.00	0.0	0.600	o	150	Pipe/Conduit	
S1.005	4.060	0.050	81.2	0.042	0.00	0.0	0.600	o	150	Pipe/Conduit	

Network Results Table

PN	Rain (mm/hr)	T.C. (mins)	US/IL (m)	Σ I.Area (ha)	Σ Base Flow (l/s)	Foul (l/s)	Add Flow (l/s)	Vel (m/s)	Cap (l/s)	Flow (l/s)
S1.001	0.00	4.92	32.820	0.090	0.0	0.0	0.0	1.00	39.7	0.0
S1.002	0.00	5.05	32.650	0.091	0.0	0.0	0.0	1.02	40.6	0.0
S1.003	0.00	5.35	32.600	0.125	0.0	0.0	0.0	0.98	39.1	0.0
S2.000	0.00	4.01	34.100	0.000	0.0	0.0	0.0	2.74	21.5	0.0
S2.001	0.00	4.07	33.923	0.000	0.0	0.0	0.0	0.86	6.8	0.0
S2.002	0.00	4.13	32.750	0.032	0.0	0.0	0.0	1.45	102.8	0.0
S2.003	0.00	4.70	32.700	0.086	0.0	0.0	0.0	0.79	62.9	0.0
S2.004	0.00	4.84	32.600	0.136	0.0	0.0	0.0	1.28	51.0	0.0
S1.004	0.00	5.63	32.500	0.279	0.0	0.0	0.0	1.00	39.8	0.0
S3.000	0.00	4.03	33.000	0.012	0.0	0.0	0.0	3.22	56.8	0.0
S1.005	0.00	5.69	32.400	0.333	0.0	0.0	0.0	1.12	19.7	0.0

©1982-2020 Innovyze

Manhole Schedules for Storm_Northern_RevA

MH Name	MH CL (m)	MH Depth (m)	MH Connection	MH Diam.,L*W (mm)	Pipe Out PN	Pipe Out Invert Level (m)	Pipe Out Diameter (mm)	Pipes In PN	Pipes In Invert Level (m)	Pipes In Diameter (mm)	Backdrop (mm)
S1	34.263	1.323	Open Manhole	1200	S1.000	32.940	225				
S2	33.600	0.780	Open Manhole	1200	S1.001	32.820	225	S1.000	32.820	225	
S3	33.845	1.195	Open Manhole	1200	S1.002	32.650	225	S1.001	32.650	225	
S4	34.012	1.412	Open Manhole	1200	S1.003	32.600	225	S1.002	32.600	225	
S5	34.500	0.400	Open Manhole	250	S2.000	34.100	100				
S6	34.417	0.494	Open Manhole	250	S2.001	33.923	100	S2.000	33.923	100	
S7	34.350	1.600	Open Manhole	1200	S2.002	32.750	300	S2.001	33.886	100	936
S8	34.000	1.300	Open Manhole	1350	S2.003	32.700	225	S2.002	32.700	300	
S9	34.224	1.624	Open Manhole	1350	S2.004	32.600	225	S2.003	32.600	225	
S10	33.600	1.100	Open Manhole	1200	S1.004	32.500	225	S1.003	32.500	225	
								S2.004	32.500	225	
Screep-11	33.600	0.600	Open Manhole	250	S3.000	33.000	150				
S12	33.600	1.200	Open Manhole	1200	S1.005	32.400	150	S1.004	32.400	225	
								S3.000	32.475	150	75
S	33.500	1.150	Open Manhole	0		OUTFALL		S1.005	32.350	150	

MH Name	Manhole Easting (m)	Manhole Northing (m)	Intersection Easting (m)	Intersection Northing (m)	Manhole Access	Layout (North)
S1	512514.202	126816.533	512514.202	126816.533	Required	
S2	512516.619	126840.411	512516.619	126840.411	Required	
S3	512487.743	126843.333	512487.743	126843.333	Required	



©1982-2020 Innovyze

Manhole Schedules for Storm_Northern_RevA

MH Name	Manhole Easting (m)	Manhole Northing (m)	Intersection Easting (m)	Intersection Northing (m)	Manhole Access	Layout (North)
S4	512480.437	126846.959	512480.437	126846.959	Required	
S5	512453.154	126816.523	512453.154	126816.523	Required	
S6	512453.415	126817.928	512453.415	126817.928	Required	
S7	512454.683	126820.647	512454.683	126820.647	Required	
S8	512453.011	126826.234	512453.011	126826.234	Required	
S9	512470.902	126846.456	512470.902	126846.456	Required	
S10	512464.683	126854.776	512464.683	126854.776	Required	
Screep-11	512448.058	126856.894	512448.058	126856.894	Required	
S12	512449.276	126861.961	512449.276	126861.961	Required	
S	512447.976	126865.807			No Entry	

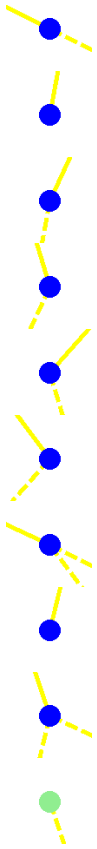

©1982-2020 Innovyze

Area Summary for Storm_Northern_RevA

Pipe Number	PIMP Type	PIMP Name	PIMP (%)	Gross Area (ha)	Imp. Area (ha)	Pipe Total (ha)
1.000	User	-	100	0.010	0.010	0.010
	User	-	100	0.002	0.002	0.012
	User	-	100	0.008	0.008	0.020
1.001	User	-	100	0.023	0.023	0.023
	User	-	100	0.009	0.009	0.032
	User	-	100	0.004	0.004	0.036
	User	-	100	0.009	0.009	0.046
	User	-	100	0.013	0.013	0.059
	User	-	100	0.009	0.009	0.068
	User	-	100	0.002	0.002	0.070
1.002	User	-	100	0.002	0.002	0.002
1.003	User	-	100	0.002	0.002	0.002
	User	-	100	0.010	0.010	0.013
	User	-	100	0.021	0.021	0.033
2.000	-	-	100	0.000	0.000	0.000
2.001	-	-	100	0.000	0.000	0.000
2.002	User	-	100	0.009	0.009	0.009
	User	-	100	0.012	0.012	0.021
	User	-	100	0.011	0.011	0.032
2.003	User	-	100	0.022	0.022	0.022
	User	-	100	0.025	0.025	0.047
	User	-	100	0.003	0.003	0.050
	User	-	100	0.004	0.004	0.053
2.004	User	-	100	0.010	0.010	0.010
	User	-	100	0.002	0.002	0.012
	User	-	100	0.022	0.022	0.034
	User	-	100	0.010	0.010	0.044
	User	-	100	0.006	0.006	0.050
1.004	User	-	100	0.010	0.010	0.010
	User	-	100	0.008	0.008	0.019
3.000	-	-	100	0.012	0.012	0.012
1.005	User	-	100	0.023	0.023	0.023
	User	-	100	0.010	0.010	0.034
	User	-	100	0.008	0.008	0.042
				Total	Total	Total
				0.333	0.333	0.333

©1982-2020 Innovyze

Free Flowing Outfall Details for Storm_Northern_RevA

Outfall Pipe Number	Outfall Name	C. Level (m)	I. Level (m)	Min I. Level (m)	D,L (mm)	W (mm)
S1.005	S	33.500	32.350	0.000	0	0

©1982-2020 Innovyze

Online Controls for Storm_Northern_RevA

Hydro-Brake® Optimum Manhole: S6, DS/PN: S2.001, Volume (m³): 0.0

Unit Reference	MD-SHE-0038-5000-0500-5000	Sump Available	Yes
Design Head (m)	0.500	Diameter (mm)	38
Design Flow (l/s)	0.5	Invert Level (m)	33.923
Flush-Flo™	Calculated	Minimum Outlet Pipe Diameter (mm)	75
Objective	Minimise upstream storage	Suggested Manhole Diameter (mm)	1200
Application	Surface		

Control Points	Head (m)	Flow (l/s)	Control Points	Head (m)	Flow (l/s)
Design Point (Calculated)	0.500	0.5	Kick-Flo®	0.331	0.4
Flush-Flo™	0.164	0.5	Mean Flow over Head Range	-	0.4

The hydrological calculations have been based on the Head/Discharge relationship for the Hydro-Brake® Optimum as specified. Should another type of control device other than a Hydro-Brake Optimum® be utilised then these storage routing calculations will be invalidated

Depth (m)	Flow (l/s)	Depth (m)	Flow (l/s)	Depth (m)	Flow (l/s)	Depth (m)	Flow (l/s)	Depth (m)	Flow (l/s)	Depth (m)	Flow (l/s)
0.100	0.5	0.600	0.5	1.600	0.8	2.600	1.0	5.000	1.4	7.500	1.7
0.200	0.5	0.800	0.6	1.800	0.9	3.000	1.1	5.500	1.5	8.000	1.8
0.300	0.5	1.000	0.7	2.000	0.9	3.500	1.2	6.000	1.5	8.500	1.8
0.400	0.5	1.200	0.7	2.200	1.0	4.000	1.3	6.500	1.6	9.000	1.9
0.500	0.5	1.400	0.8	2.400	1.0	4.500	1.3	7.000	1.6	9.500	1.9

Hydro-Brake® Optimum Manhole: S12, DS/PN: S1.005, Volume (m³): 2.1

Unit Reference	MD-SHE-0093-4000-1100-4000	Sump Available	Yes
Design Head (m)	1.100	Diameter (mm)	93
Design Flow (l/s)	4.0	Invert Level (m)	32.400
Flush-Flo™	Calculated	Minimum Outlet Pipe Diameter (mm)	150
Objective	Minimise upstream storage	Suggested Manhole Diameter (mm)	1200
Application	Surface		

Control Points	Head (m)	Flow (l/s)	Control Points	Head (m)	Flow (l/s)
Design Point (Calculated)	1.100	4.0	Kick-Flo®	0.684	3.2
Flush-Flo™	0.326	4.0	Mean Flow over Head Range	-	3.5

©1982-2020 Innovyze

Hydro-Brake® Optimum Manhole: S12, DS/PN: S1.005, Volume (m³): 2.1

The hydrological calculations have been based on the Head/Discharge relationship for the Hydro-Brake® Optimum as specified. Should another type of control device other than a Hydro-Brake Optimum® be utilised then these storage routing calculations will be invalidated

Depth (m)	Flow (l/s)	Depth (m)	Flow (l/s)	Depth (m)	Flow (l/s)	Depth (m)	Flow (l/s)	Depth (m)	Flow (l/s)	Depth (m)	Flow (l/s)
0.100	3.0	0.600	3.6	1.600	4.8	2.600	6.0	5.000	8.1	7.500	9.8
0.200	3.8	0.800	3.5	1.800	5.0	3.000	6.4	5.500	8.5	8.000	10.2
0.300	4.0	1.000	3.8	2.000	5.3	3.500	6.9	6.000	8.9	8.500	10.5
0.400	4.0	1.200	4.2	2.200	5.5	4.000	7.3	6.500	9.2	9.000	10.7
0.500	3.9	1.400	4.5	2.400	5.7	4.500	7.7	7.000	9.5	9.500	11.0

©1982-2020 Innovyze

Storage Structures for Storm_Northern_RevA

Complex Manhole: S2, DS/PN: S1.001

Cellular Storage

Invert Level (m) 32.820 Infiltration Coefficient Side (m/hr) 0.00000 Porosity 0.95
Infiltration Coefficient Base (m/hr) 0.00000 Safety Factor 2.0

Depth (m)	Area (m²)	Inf. Area (m²)	Depth (m)	Area (m²)	Inf. Area (m²)	Depth (m)	Area (m²)	Inf. Area (m²)
0.000	29.0	0.0	0.400	29.0	0.0	0.401	0.0	0.0

Cellular Storage

Invert Level (m) 32.820 Infiltration Coefficient Side (m/hr) 0.00000 Porosity 0.95
Infiltration Coefficient Base (m/hr) 0.00000 Safety Factor 2.0

Depth (m)	Area (m²)	Inf. Area (m²)	Depth (m)	Area (m²)	Inf. Area (m²)	Depth (m)	Area (m²)	Inf. Area (m²)
0.000	30.0	0.0	0.450	30.0	0.0	0.451	0.0	0.0

Cellular Storage Manhole: S4, DS/PN: S1.003

Invert Level (m) 32.650 Infiltration Coefficient Side (m/hr) 0.00000 Porosity 0.95
Infiltration Coefficient Base (m/hr) 0.00000 Safety Factor 2.0

Depth (m)	Area (m²)	Inf. Area (m²)	Depth (m)	Area (m²)	Inf. Area (m²)	Depth (m)	Area (m²)	Inf. Area (m²)
0.000	30.0	0.0	0.400	30.0	0.0	0.401	0.0	0.0

Tank or Pond Manhole: S6, DS/PN: S2.001

Invert Level (m) 33.923

Depth (m)	Area (m²)	Depth (m)	Area (m²)
0.000	80.0	0.600	147.3

©1982-2020 Innovyze

Complex Manhole: S7, DS/PN: S2.002

Infiltration Trench

Infiltration Coefficient Base (m/hr)	0.00000	Invert Level (m)	32.750	Cap Volume Depth (m)	0.600
Infiltration Coefficient Side (m/hr)	0.00000	Trench Width (m)	9.8	Cap Infiltration Depth (m)	0.000
Safety Factor	2.0	Trench Length (m)	29.0		
Porosity	0.95	Slope (1:X)	200.0		

Cellular Storage Manhole: S9, DS/PN: S2.004

Invert Level (m) 32.600 Infiltration Coefficient Side (m/hr) 0.00000 Porosity 0.95
Infiltration Coefficient Base (m/hr) 0.00000 Safety Factor 2.0

Depth (m)	Area (m²)	Inf. Area (m²)	Depth (m)	Area (m²)	Inf. Area (m²)	Depth (m)	Area (m²)	Inf. Area (m²)
0.000	90.3	0.0	0.400	90.3	0.0	0.401	0.0	0.0

Cellular Storage Manhole: S12, DS/PN: S1.005

Invert Level (m) 32.400 Infiltration Coefficient Side (m/hr) 0.00000 Porosity 0.95
Infiltration Coefficient Base (m/hr) 0.00000 Safety Factor 2.0

Depth (m)	Area (m²)	Inf. Area (m²)	Depth (m)	Area (m²)	Inf. Area (m²)	Depth (m)	Area (m²)	Inf. Area (m²)
0.000	110.0	0.0	0.400	110.0	0.0	0.401	0.0	0.0

©1982-2020 Innovyze

2 year Return Period Summary of Critical Results by Maximum Level (Rank 1) for Storm_Northern_RevA

Simulation Criteria

Areal Reduction Factor 1.000 Manhole Headloss Coeff (Global) 0.500 MADD Factor * 10m³/ha Storage 2.000
Hot Start (mins) 0 Foul Sewage per hectare (l/s) 0.000 Inlet Coeffiecient 0.800
Hot Start Level (mm) 0 Additional Flow - % of Total Flow 0.000 Flow per Person per Day (l/per/day) 0.000

Number of Input Hydrographs 0 Number of Offline Controls 0 Number of Time/Area Diagrams 0
Number of Online Controls 2 Number of Storage Structures 6 Number of Real Time Controls 0

Synthetic Rainfall Details

Rainfall Model FEH Site Location GB 512459 126808 TQ 12459 26808 Cv (Summer) 1.000
FEH Rainfall Version 2013 Data Type Point Cv (Winter) 1.000

Margin for Flood Risk Warning (mm) 150.0 DVD Status OFF
Analysis Timestep 2.5 Second Increment (Extended) Inertia Status OFF
DTS Status ON

Profile(s) Summer and Winter
Duration(s) (mins) 15, 30, 60, 120, 180, 240, 360, 480, 600, 720, 960, 1440, 2160, 2880, 4320, 5760, 7200, 8640, 10080
Return Period(s) (years) 2, 100
Climate Change (%) 0, 45

PN	US/MH Name	Event	US/CL (m)	Water Level (m)	Surcharged Depth (m)	Flooded Volume (m³)	Flow / Cap.	Maximum Vol (m³)	Maximum Velocity (m/s)	Pipe Flow (l/s)	Status
S1.000	S1	15 minute 2 year Summer I+0%	34.263	32.995	-0.170	0.000	0.13	0.056	0.6	4.5	OK
S1.001	S2	30 minute 2 year Summer I+0%	33.600	32.899	-0.146	0.000	0.26	4.584	0.8	9.8	OK
S1.002	S3	30 minute 2 year Summer I+0%	33.845	32.736	-0.139	0.000	0.32	0.188	0.7	9.9	OK
S1.003	S4	240 minute 2 year Summer I+0%	34.012	32.730	-0.095	0.000	0.19	2.529	0.7	6.5	OK
S2.000	S5	15 minute 2 year Summer I+0%	34.500	34.100	-0.100	0.000	0.00	0.000	0.0	0.0	OK
S2.001	S6	15 minute 2 year Summer I+0%	34.417	33.923	-0.100	0.000	0.00	0.000	0.0	0.0	OK
S2.002	S7	30 minute 2 year Summer I+0%	34.350	32.791	-0.259	0.000	0.05	1.628	0.5	2.8	OK
S2.003	S8	15 minute 2 year Summer I+0%	34.000	32.764	-0.161	0.000	0.18	0.119	0.6	10.5	OK
S2.004	S9	240 minute 2 year Summer I+0%	34.224	32.728	-0.097	0.000	0.16	11.804	0.8	6.7	OK
S1.004	S10	240 minute 2 year Summer I+0%	33.600	32.726	0.001	0.000	0.38	1.024	0.8	13.6	SURCHARGED
S3.000	Screep-11	15 minute 2 year Summer I+0%	33.600	33.024	-0.126	0.000	0.06	0.001	1.5	2.8	OK
S1.005	S12	240 minute 2 year Summer I+0%	33.600	32.719	0.169	0.000	0.28	34.377	0.9	4.0	SURCHARGED

©1982-2020 Innovyze

100 year Return Period Summary of Critical Results by Maximum Level (Rank 1) for Storm_Northern_RevA

Simulation Criteria

Areal Reduction Factor 1.000 Manhole Headloss Coeff (Global) 0.500 MADD Factor * 10m³/ha Storage 2.000
Hot Start (mins) 0 Foul Sewage per hectare (l/s) 0.000 Inlet Coeffiecient 0.800
Hot Start Level (mm) 0 Additional Flow - % of Total Flow 0.000 Flow per Person per Day (l/per/day) 0.000

Number of Input Hydrographs 0 Number of Offline Controls 0 Number of Time/Area Diagrams 0
Number of Online Controls 2 Number of Storage Structures 6 Number of Real Time Controls 0

Synthetic Rainfall Details

Rainfall Model FEH Site Location GB 512459 126808 TQ 12459 26808 Cv (Summer) 1.000
FEH Rainfall Version 2013 Data Type Point Cv (Winter) 1.000

Margin for Flood Risk Warning (mm) 150.0 DVD Status OFF
Analysis Timestep 2.5 Second Increment (Extended) Inertia Status OFF
DTS Status ON

Profile(s) Summer and Winter
Duration(s) (mins) 15, 30, 60, 120, 180, 240, 360, 480, 600, 720, 960, 1440, 2160, 2880, 4320, 5760, 7200, 8640, 10080
Return Period(s) (years) 2, 100
Climate Change (%) 0, 45

PN	US/MH Name	Event	US/CL (m)	Water Level (m)	Surcharged Depth (m)	Flooded Volume (m³)	Flow / Cap.	Maximum Vol (m³)	Maximum Velocity (m/s)	Pipe Flow (l/s)	Status
S1.000	S1	60 minute 100 year Summer I+45%	34.263	33.483	0.318	0.000	0.34	0.608	0.7	11.5	SURCHARGED
S1.001	S2	60 minute 100 year Summer I+45%	33.600	33.473	0.428	0.000	0.76	25.503	1.0	28.1	FLOOD RISK
S1.002	S3	60 minute 100 year Summer I+45%	33.845	33.421	0.546	0.000	0.81	1.973	0.8	25.4	SURCHARGED
S1.003	S4	60 minute 100 year Summer I+45%	34.012	33.420	0.595	0.000	0.78	12.608	0.8	27.2	SURCHARGED
S2.000	S5	15 minute 100 year Summer I+45%	34.500	34.100	-0.100	0.000	0.00	0.000	0.0	0.0	OK
S2.001	S6	15 minute 100 year Summer I+45%	34.417	33.923	-0.100	0.000	0.00	0.000	0.0	0.0	OK
S2.002	S7	360 minute 100 year Winter I+45%	34.350	33.255	0.205	0.000	0.08	117.309	0.4	5.0	SURCHARGED
S2.003	S8	360 minute 100 year Winter I+45%	34.000	33.257	0.332	0.000	0.10	1.112	0.5	6.1	SURCHARGED
S2.004	S9	60 minute 100 year Summer I+45%	34.224	33.370	0.545	0.000	0.32	37.478	0.9	13.7	SURCHARGED
S1.004	S10	60 minute 100 year Summer I+45%	33.600	33.456	0.731	0.000	0.91	2.089	1.0	32.4	FLOOD RISK
S3.000	Screep-11	60 minute 100 year Summer I+45%	33.600	33.527	0.377	0.000	0.17	0.026	1.9	7.6	FLOOD RISK
S1.005	S12	60 minute 100 year Summer I+45%	33.600	33.521	0.971	0.000	0.29	43.805	0.9	4.0	FLOOD RISK

©1982-2020 Innovyze

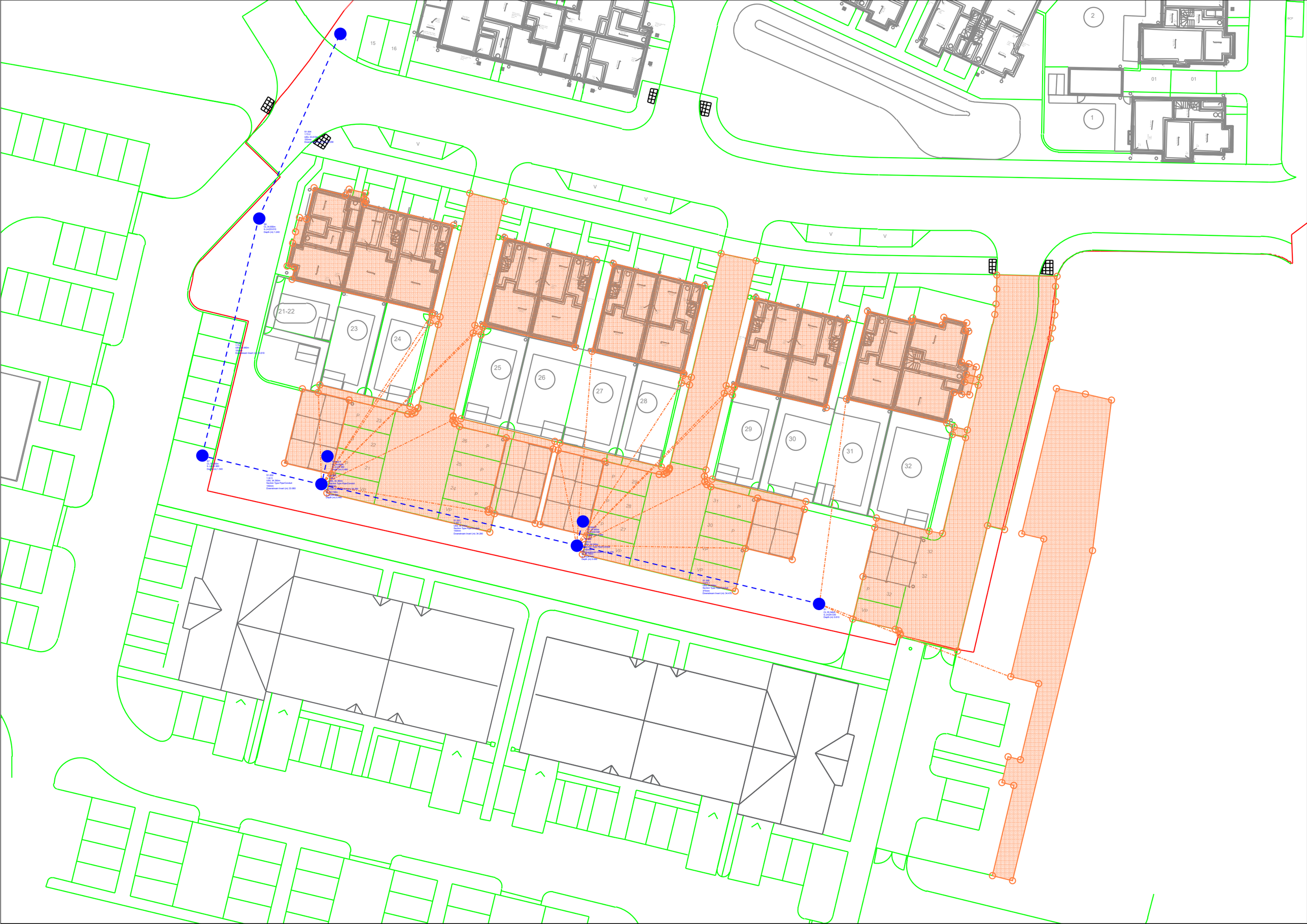

15
16
2
01
01
1
21-22
23
24
25
26
27
28
29
30
31
32

Tuscany House White Hart Lane Basingstoke RG21 4AF	SW System_Southern Rev.A
Date 26/01/2024 16:09 File 23-020 - Sumners Pond.MDX	Designed by AK Checked by
Micro Drainage	Network 2020.1.3

STORM SEWER DESIGN by the Modified Rational Method

Design Criteria for Storm_Southern_RevA

Pipe Sizes STANDARD Manhole Sizes STANDARD

FSR Rainfall Model - England and Wales

Return Period (years)	30	Foul Sewage (l/s/ha)	0.000	Maximum Backdrop Height (m)	1.500
M5-60 (mm)	20.000	Volumetric Runoff Coeff.	0.750	Min Design Depth for Optimisation (m)	0.900
Ratio R	0.355	PIMP (%)	100	Min Vel for Auto Design only (m/s)	1.00
Maximum Rainfall (mm/hr)	0	Add Flow / Climate Change (%)	10	Min Slope for Optimisation (1:X)	500
Maximum Time of Concentration (mins)	30	Minimum Backdrop Height (m)	0.200		

Designed with Level Inverts

Time Area Diagram for Storm_Southern_RevA

Time (mins)	Area (ha)	Time (mins)	Area (ha)
0-4	0.136	4-8	0.083

Total Area Contributing (ha) = 0.219

Total Pipe Volume (m³) = 4.877

Network Design Table for Storm_Southern_RevA

PN	Length (m)	Fall (m)	Slope (1:X)	I.Area (ha)	T.E. (mins)	Base Flow (l/s)	k (mm)	HYD SECT	DIA (mm)	Section Type	Auto Design
S1.000	28.505	0.060	475.1	0.077	4.00	0.0	0.600	o	375	Pipe/Conduit	

Network Results Table

PN	Rain (mm/hr)	T.C. (mins)	US/IL (m)	Σ I.Area (ha)	Σ Base Flow (l/s)	Foul (l/s)	Add Flow (l/s)	Vel (m/s)	Cap (l/s)	Flow (l/s)
S1.000	0.00	4.58	34.530	0.077	0.0	0.0	0.0	0.82	91.1	0.0

©1982-2020 Innovyze

Network Design Table for Storm_Southern_RevA

PN	Length (m)	Fall (m)	Slope (1:X)	I.Area (ha)	T.E. (mins)	Base Flow (l/s)	k (mm)	HYD SECT	DIA (mm)	Section Type	Auto Design
S2.000	2.861	0.070	40.9	0.003	4.00	0.0	0.600	o	100	Pipe/Conduit	
S1.001	30.080	0.180	167.1	0.063	0.00	0.0	0.600	o	150	Pipe/Conduit	
S3.000	3.266	0.070	46.7	0.003	4.00	0.0	0.600	o	100	Pipe/Conduit	
S1.002	14.015	0.330	42.5	0.072	0.00	0.0	0.600	o	150	Pipe/Conduit	
S1.003	27.902	0.350	79.7	0.000	0.00	0.0	0.600	o	150	Pipe/Conduit	
S1.004	23.089	0.320	72.2	0.000	0.00	0.0	0.600	o	150	Pipe/Conduit	

Network Results Table

PN	Rain (mm/hr)	T.C. (mins)	US/IL (m)	Σ I.Area (ha)	Σ Base Flow (l/s)	Foul (l/s)	Add Flow (l/s)	Vel (m/s)	Cap (l/s)	Flow (l/s)
S2.000	0.00	4.04	34.540	0.003	0.0	0.0	0.0	1.21	9.5	0.0
S1.001	0.00	4.65	34.470	0.000	5.0	0.0	0.5	0.77	13.7	5.0
S3.000	0.00	4.05	34.360	0.003	0.0	0.0	0.0	1.13	8.9	0.0
S1.002	0.00	4.15	34.290	0.000	3.5	0.0	0.3	1.55	27.4	3.5
S1.003	0.00	4.56	33.960	0.000	3.5	0.0	0.4	1.13	19.9	3.9
S1.004	0.00	4.89	33.610	0.000	3.5	0.0	0.4	1.19	20.9	3.9

©1982-2020 Innovyze

Manhole Schedules for Storm_Southern_RevA

MH Name	MH CL (m)	MH Depth (m)	MH Connection	MH Diam.,L*W (mm)	Pipe Out PN	Pipe Out Invert Level (m)	Pipe Out Diameter (mm)	Pipes In PN	Pipes In Invert Level (m)	Pipes In Diameter (mm)	Backdrop (mm)
S1	35.340	0.810	Open Manhole	450	S1.000	34.530	375				
Screep-2	34.900	0.360	Open Manhole	450	S2.000	34.540	100				
S3	35.160	0.690	Open Manhole	450	S1.001	34.470	150	S1.000	34.470	375	
								S2.000	34.470	100	
Screep-4	34.850	0.490	Open Manhole	450	S3.000	34.360	100				
S5	34.730	0.440	Open Manhole	450	S1.002	34.290	150	S1.001	34.290	150	
								S3.000	34.290	100	
S7	35.500	1.540	Open Manhole	450	S1.003	33.960	150	S1.002	33.960	150	
S8	34.850	1.240	Open Manhole	450	S1.004	33.610	150	S1.003	33.610	150	
S	34.450	1.160	Open Manhole	0		OUTFALL		S1.004	33.290	150	

MH Name	Manhole Easting (m)	Manhole Northing (m)	Intersection Easting (m)	Intersection Northing (m)	Manhole Access	Layout (North)
S1	512462.669	126751.088	512462.669	126751.088	Required	
Screep-2	512435.642	126760.522	512435.642	126760.522	Required	
S3	512434.952	126757.746	512434.952	126757.746	Required	
Screep-4	512406.402	126767.984	512406.402	126767.984	Required	
S5	512405.709	126764.792	512405.709	126764.792	Required	



©1982-2020 Innovyze

Manhole Schedules for Storm_Southern_RevA

MH Name	Manhole Easting (m)	Manhole Northing (m)	Intersection Easting (m)	Intersection Northing (m)	Manhole Access	Layout (North)
S7	512392.081	126768.064	512392.081	126768.064	Required	
S8	512398.595	126795.195	512398.595	126795.195	Required	
S	512407.883	126816.333			No Entry	



©1982-2020 Innovyze

Area Summary for Storm_Southern_RevA

Pipe Number	PIMP Type	PIMP Name	PIMP (%)	Gross Area (ha)	Imp. Area (ha)	Pipe Total (ha)
1.000	User	-	100	0.036	0.036	0.036
	User	-	100	0.028	0.028	0.064
	User	-	100	0.013	0.013	0.077
2.000	-	-	100	0.003	0.003	0.003
1.001	User	-	100	0.011	0.011	0.011
	User	-	100	0.031	0.031	0.042
	User	-	100	0.000	0.000	0.042
	User	-	100	0.000	0.000	0.042
	User	-	100	0.003	0.003	0.045
	User	-	100	0.005	0.005	0.050
	User	-	100	0.001	0.001	0.051
	User	-	100	0.001	0.001	0.052
	User	-	100	0.011	0.011	0.063
3.000	-	-	100	0.003	0.003	0.003
1.002	User	-	100	0.011	0.011	0.011
	User	-	100	0.018	0.018	0.029
	User	-	100	0.031	0.031	0.060
	User	-	100	0.005	0.005	0.065
	User	-	100	0.005	0.005	0.070
	User	-	100	0.000	0.000	0.070
	User	-	100	0.000	0.000	0.070
	User	-	100	0.001	0.001	0.071
	User	-	100	0.001	0.001	0.072
1.003	-	-	100	0.000	0.000	0.000
1.004	-	-	100	0.000	0.000	0.000
				Total	Total	Total
				0.219	0.219	0.219

Free Flowing Outfall Details for Storm_Southern_RevA

Outfall Pipe Number	Outfall Name	C. Level (m)	I. Level (m)	Min I. Level (m)	D,L (mm)	W (mm)
S1.004	S	34.450	33.290	0.000	0	0

©1982-2020 Innovyze

Online Controls for Storm_Southern_RevA

Hydro-Brake® Optimum Manhole: S3, DS/PN: S1.001, Volume (m³): 3.2

Unit Reference	MD-SHE-0107-4400-0450-4400	Sump Available	Yes
Design Head (m)	0.450	Diameter (mm)	107
Design Flow (l/s)	4.4	Invert Level (m)	34.470
Flush-Flo™	Calculated	Minimum Outlet Pipe Diameter (mm)	150
Objective	Minimise upstream storage	Suggested Manhole Diameter (mm)	1200
Application	Surface		

Control Points	Head (m)	Flow (l/s)	Control Points	Head (m)	Flow (l/s)
Design Point (Calculated)	0.450	4.4	Kick-Flo®	0.337	3.9
Flush-Flo™	0.166	4.4	Mean Flow over Head Range	-	3.6

The hydrological calculations have been based on the Head/Discharge relationship for the Hydro-Brake® Optimum as specified. Should another type of control device other than a Hydro-Brake Optimum® be utilised then these storage routing calculations will be invalidated

Depth (m)	Flow (l/s)	Depth (m)	Flow (l/s)	Depth (m)	Flow (l/s)	Depth (m)	Flow (l/s)	Depth (m)	Flow (l/s)	Depth (m)	Flow (l/s)
0.100	3.6	0.600	5.0	1.600	7.9	2.600	10.0	5.000	13.6	7.500	16.7
0.200	4.4	0.800	5.7	1.800	8.4	3.000	10.7	5.500	14.3	8.000	17.3
0.300	4.1	1.000	6.4	2.000	8.8	3.500	11.5	6.000	14.9	8.500	17.8
0.400	4.2	1.200	6.9	2.200	9.2	4.000	12.3	6.500	15.5	9.000	18.3
0.500	4.6	1.400	7.5	2.400	9.6	4.500	13.0	7.000	16.1	9.500	18.8

Hydro-Brake® Optimum Manhole: S5, DS/PN: S1.002, Volume (m³): 0.6

Unit Reference	MD-SHE-0117-5500-0500-5500	Sump Available	Yes
Design Head (m)	0.500	Diameter (mm)	117
Design Flow (l/s)	5.5	Invert Level (m)	34.290
Flush-Flo™	Calculated	Minimum Outlet Pipe Diameter (mm)	150
Objective	Minimise upstream storage	Suggested Manhole Diameter (mm)	1200
Application	Surface		

Control Points	Head (m)	Flow (l/s)	Control Points	Head (m)	Flow (l/s)
Design Point (Calculated)	0.500	5.5	Kick-Flo®	0.374	4.8
Flush-Flo™	0.184	5.5	Mean Flow over Head Range	-	4.5

©1982-2020 Innovyze

Hydro-Brake® Optimum Manhole: S5, DS/PN: S1.002, Volume (m³): 0.6

The hydrological calculations have been based on the Head/Discharge relationship for the Hydro-Brake® Optimum as specified. Should another type of control device other than a Hydro-Brake Optimum® be utilised then these storage routing calculations will be invalidated

Depth (m)	Flow (l/s)	Depth (m)	Flow (l/s)	Depth (m)	Flow (l/s)	Depth (m)	Flow (l/s)	Depth (m)	Flow (l/s)	Depth (m)	Flow (l/s)
0.100	4.1	0.600	6.0	1.600	9.5	2.600	11.9	5.000	16.3	7.500	19.9
0.200	5.5	0.800	6.8	1.800	10.0	3.000	12.8	5.500	17.0	8.000	20.6
0.300	5.3	1.000	7.6	2.000	10.5	3.500	13.7	6.000	17.8	8.500	21.2
0.400	5.0	1.200	8.3	2.200	11.0	4.000	14.7	6.500	18.5	9.000	21.8
0.500	5.5	1.400	8.9	2.400	11.5	4.500	15.5	7.000	19.2	9.500	22.4

©1982-2020 Innovyze

Storage Structures for Storm_Southern_RevA

Complex Manhole: S3, DS/PN: S1.001

Cellular Storage

Invert Level (m) 34.470 Infiltration Coefficient Side (m/hr) 0.00000 Porosity 0.95
Infiltration Coefficient Base (m/hr) 0.00000 Safety Factor 2.0

Depth (m)	Area (m²)	Inf. Area (m²)	Depth (m)	Area (m²)	Inf. Area (m²)	Depth (m)	Area (m²)	Inf. Area (m²)
0.000	186.0	0.0	0.300	186.0	0.0	0.301	0.0	0.0

Cellular Storage

Invert Level (m) 34.520 Infiltration Coefficient Side (m/hr) 0.00000 Porosity 0.95
Infiltration Coefficient Base (m/hr) 0.00000 Safety Factor 2.0

Depth (m)	Area (m²)	Inf. Area (m²)	Depth (m)	Area (m²)	Inf. Area (m²)	Depth (m)	Area (m²)	Inf. Area (m²)
0.000	90.0	0.0	0.150	90.0	0.0	0.151	0.0	0.0

Cellular Storage

Invert Level (m) 34.770 Infiltration Coefficient Side (m/hr) 0.00000 Porosity 0.92
Infiltration Coefficient Base (m/hr) 0.00000 Safety Factor 2.0

Depth (m)	Area (m²)	Inf. Area (m²)	Depth (m)	Area (m²)	Inf. Area (m²)	Depth (m)	Area (m²)	Inf. Area (m²)
0.000	186.0	0.0	0.085	186.0	0.0	0.086	0.0	0.0

Complex Manhole: S5, DS/PN: S1.002

©1982-2020 Innovyze

Cellular Storage

Invert Level (m) 34.290 Infiltration Coefficient Side (m/hr) 0.00000 Porosity 0.95
Infiltration Coefficient Base (m/hr) 0.00000 Safety Factor 2.0

Depth (m)	Area (m²)	Inf. Area (m²)	Depth (m)	Area (m²)	Inf. Area (m²)	Depth (m)	Area (m²)	Inf. Area (m²)
0.000	198.0	0.0	0.150	198.0	0.0	0.151	0.0	0.0

Cellular Storage

Invert Level (m) 34.340 Infiltration Coefficient Side (m/hr) 0.00000 Porosity 0.95
Infiltration Coefficient Base (m/hr) 0.00000 Safety Factor 2.0

Depth (m)	Area (m²)	Inf. Area (m²)	Depth (m)	Area (m²)	Inf. Area (m²)	Depth (m)	Area (m²)	Inf. Area (m²)
0.000	90.0	0.0	0.150	90.0	0.0	0.151	0.0	0.0

Cellular Storage

Invert Level (m) 34.440 Infiltration Coefficient Side (m/hr) 0.00000 Porosity 0.92
Infiltration Coefficient Base (m/hr) 0.00000 Safety Factor 2.0

Depth (m)	Area (m²)	Inf. Area (m²)	Depth (m)	Area (m²)	Inf. Area (m²)	Depth (m)	Area (m²)	Inf. Area (m²)
0.000	198.0	0.0	0.085	198.0	0.0	0.086	0.0	0.0

©1982-2020 Innovyze

2 year Return Period Summary of Critical Results by Maximum Level (Rank 1) for Storm_Southern_RevA

Simulation Criteria

Areal Reduction Factor 1.000 Manhole Headloss Coeff (Global) 0.500 MADD Factor * 10m³/ha Storage 2.000
Hot Start (mins) 0 Foul Sewage per hectare (l/s) 0.000 Inlet Coeffiecient 0.800
Hot Start Level (mm) 0 Additional Flow - % of Total Flow 0.000 Flow per Person per Day (l/per/day) 0.000

Number of Input Hydrographs 0 Number of Offline Controls 0 Number of Time/Area Diagrams 0
Number of Online Controls 2 Number of Storage Structures 2 Number of Real Time Controls 0

Synthetic Rainfall Details

Rainfall Model FEH Site Location GB 512459 126808 TQ 12459 26808 Cv (Summer) 1.000
FEH Rainfall Version 2013 Data Type Point Cv (Winter) 1.000

Margin for Flood Risk Warning (mm) 150.0 DVD Status OFF
Analysis Timestep 2.5 Second Increment (Extended) Inertia Status OFF
DTS Status ON

Profile(s) Summer and Winter
Duration(s) (mins) 15, 30, 60, 120, 180, 240, 360, 480, 600, 720, 960, 1440, 2160, 2880, 4320, 5760, 7200, 8640, 10080
Return Period(s) (years) 2, 100
Climate Change (%) 0, 45

PN	US/MH Name	Event	US/CL (m)	Water Level (m)	Surcharged Depth (m)	Flooded Volume (m³)	Flow / Cap.	Maximum Vol (m³)	Maximum Velocity (m/s)	Pipe Flow (l/s)	Status
S1.000	S1	15 minute 2 year Summer I+0%	35.340	34.650	-0.255	0.000	0.22	0.018	0.6	17.9	OK
S2.000	Screep-2	240 minute 2 year Summer I+0%	34.900	34.562	-0.078	0.000	0.03	0.003	0.5	0.2	OK
S1.001	S3	240 minute 2 year Summer I+0%	35.160	34.562	-0.058	0.000	0.25	20.075	0.6	3.3	OK
S3.000	Screep-4	15 minute 2 year Summer I+0%	34.850	34.381	-0.079	0.000	0.09	0.002	0.6	0.7	OK
S1.002	S5	480 minute 2 year Summer I+0%	34.730	34.379	-0.061	0.000	0.14	20.086	1.1	3.5	OK
S1.003	S7	480 minute 2 year Summer I+0%	35.500	34.003	-0.107	0.000	0.18	0.015	0.8	3.5	OK
S1.004	S8	480 minute 2 year Summer I+0%	34.850	33.652	-0.108	0.000	0.18	0.022	0.9	3.5	OK

©1982-2020 Innovyze

100 year Return Period Summary of Critical Results by Maximum Level (Rank 1) for Storm_Southern_RevA

Simulation Criteria

Areal Reduction Factor 1.000 Manhole Headloss Coeff (Global) 0.500 MADD Factor * 10m³/ha Storage 2.000
Hot Start (mins) 0 Foul Sewage per hectare (l/s) 0.000 Inlet Coeffiecient 0.800
Hot Start Level (mm) 0 Additional Flow - % of Total Flow 0.000 Flow per Person per Day (l/per/day) 0.000

Number of Input Hydrographs 0 Number of Offline Controls 0 Number of Time/Area Diagrams 0
Number of Online Controls 2 Number of Storage Structures 2 Number of Real Time Controls 0

Synthetic Rainfall Details

Rainfall Model FEH Site Location GB 512459 126808 TQ 12459 26808 Cv (Summer) 1.000
FEH Rainfall Version 2013 Data Type Point Cv (Winter) 1.000

Margin for Flood Risk Warning (mm) 150.0 DVD Status OFF
Analysis Timestep 2.5 Second Increment (Extended) Inertia Status OFF
DTS Status ON

Profile(s)	Summer and Winter
Duration(s) (mins)	15, 30, 60, 120, 180, 240, 360, 480, 600, 720, 960, 1440, 2160, 2880, 4320, 5760, 7200, 8640, 10080
Return Period(s) (years)	2, 100
Climate Change (%)	0, 45

PN	US/MH Name	Event	US/CL (m)	Water Level (m)	Surcharged Depth (m)	Flooded Volume (m³)	Flow / Cap.	Maximum Vol (m³)	Maximum Velocity (m/s)	Pipe Flow (l/s)	Status
S1.000	S1	120 minute 100 year Winter I+45%	35.340	34.850	-0.055	0.000	0.24	0.050	0.5	19.6	OK
S2.000	Screep-2	120 minute 100 year Winter I+45%	34.900	34.849	0.209	0.000	0.10	0.048	0.5	0.7	FLOOD RISK
S1.001	S3	120 minute 100 year Winter I+45%	35.160	34.849	0.229	0.000	0.33	82.309	0.7	4.3	SURCHARGED
S3.000	Screep-4	360 minute 100 year Summer I+45%	34.850	34.700	0.240	0.000	0.07	0.053	0.5	0.5	SURCHARGED
S1.002	S5	360 minute 100 year Summer I+45%	34.730	34.700	0.260	0.000	0.22	57.286	1.2	5.5	FLOOD RISK
S1.003	S7	600 minute 100 year Summer I+45%	35.500	34.015	-0.095	0.000	0.29	0.019	0.9	5.5	OK
S1.004	S8	960 minute 100 year Summer I+45%	34.850	33.663	-0.097	0.000	0.28	0.028	1.0	5.5	OK

©1982-2020 Innovyze

Tuscany House White Hart Lane Basingstoke RG21 4AF	Sumners Pond S38 Road
Date 01/08/2023 15:11 File 23-020 S38 Road_3.5l_s_...	Designed by AK Checked by
Micro Drainage	Source Control 2020.1.3

Summary of Results for 100 year Return Period (+45%)

Half Drain Time : 213 minutes.

Storm Event	Max Level (m)	Max Depth (m)	Max Infiltration (l/s)	Max Control (l/s)	Max Σ Outflow (l/s)	Max Volume (m³)	Status
15 min Summer	33.879	0.529	0.0	3.5	3.5	46.1	O K
30 min Summer	34.003	0.653	0.0	3.5	3.5	60.3	O K
60 min Summer	34.144	0.794	0.0	3.5	3.5	73.1	Flood Risk
120 min Summer	34.271	0.921	0.0	3.5	3.5	81.2	Flood Risk
180 min Summer	34.284	0.934	0.0	3.5	3.5	81.6	Flood Risk
240 min Summer	34.239	0.889	0.0	3.5	3.5	79.7	Flood Risk
360 min Summer	34.186	0.836	0.0	3.5	3.5	76.4	Flood Risk
480 min Summer	34.145	0.795	0.0	3.5	3.5	73.2	Flood Risk
600 min Summer	34.107	0.757	0.0	3.5	3.5	70.1	O K
720 min Summer	34.071	0.721	0.0	3.5	3.5	66.8	O K
960 min Summer	33.998	0.648	0.0	3.5	3.5	59.9	O K
1440 min Summer	33.867	0.517	0.0	3.5	3.5	44.6	O K
2160 min Summer	33.731	0.381	0.0	3.5	3.5	27.2	O K
2880 min Summer	33.632	0.282	0.0	3.5	3.5	15.3	O K
4320 min Summer	33.510	0.160	0.0	3.3	3.3	4.1	O K
5760 min Summer	33.454	0.104	0.0	2.8	2.8	1.4	O K
7200 min Summer	33.437	0.087	0.0	2.4	2.4	0.9	O K
8640 min Summer	33.426	0.076	0.0	2.1	2.1	0.7	O K
10080 min Summer	33.419	0.069	0.0	1.8	1.8	0.5	O K
15 min Winter	33.879	0.529	0.0	3.5	3.5	46.1	O K

Storm Event	Rain (mm/hr)	Flooded Volume (m³)	Discharge Volume (m³)	Time-Peak (mins)
15 min Summer	137.239	0.0	49.4	18
30 min Summer	91.962	0.0	66.2	33
60 min Summer	58.739	0.0	84.6	62
120 min Summer	36.170	0.0	104.2	122
180 min Summer	26.810	0.0	115.8	180
240 min Summer	21.529	0.0	124.0	212
360 min Summer	15.827	0.0	136.7	278
480 min Summer	12.701	0.0	146.3	344
600 min Summer	10.699	0.0	154.1	414
720 min Summer	9.295	0.0	160.6	484
960 min Summer	7.438	0.0	171.4	626
1440 min Summer	5.422	0.0	187.4	878
2160 min Summer	3.945	0.0	204.5	1232
2880 min Summer	3.143	0.0	217.3	1560
4320 min Summer	2.279	0.0	236.2	2208
5760 min Summer	1.811	0.0	250.4	2936
7200 min Summer	1.516	0.0	262.0	3632
8640 min Summer	1.312	0.0	272.0	4384
10080 min Summer	1.161	0.0	280.8	5056
15 min Winter	137.239	0.0	49.4	18

©1982-2020 Innovyze

Summary of Results for 100 year Return Period (+45%)

Storm Event	Max Level (m)	Max Depth (m)	Max Infiltration (l/s)	Max Control (l/s)	Max Σ Outflow (l/s)	Max Volume (m³)	Status
30 min Winter	34.004	0.654	0.0	3.5	3.5	60.4	O K
60 min Winter	34.147	0.797	0.0	3.5	3.5	73.4	Flood Risk
120 min Winter	34.294	0.944	0.0	3.5	3.5	81.9	Flood Risk
180 min Winter	34.334	0.984	0.0	3.5	3.5	82.7	Flood Risk
240 min Winter	34.260	0.910	0.0	3.5	3.5	80.8	Flood Risk
360 min Winter	34.182	0.832	0.0	3.5	3.5	76.1	Flood Risk
480 min Winter	34.126	0.776	0.0	3.5	3.5	71.6	O K
600 min Winter	34.070	0.720	0.0	3.5	3.5	66.8	O K
720 min Winter	34.014	0.664	0.0	3.5	3.5	61.4	O K
960 min Winter	33.901	0.551	0.0	3.5	3.5	48.9	O K
1440 min Winter	33.741	0.391	0.0	3.5	3.5	28.5	O K
2160 min Winter	33.575	0.225	0.0	3.4	3.4	9.4	O K
2880 min Winter	33.478	0.128	0.0	3.1	3.1	2.3	O K
4320 min Winter	33.434	0.084	0.0	2.3	2.3	0.8	O K
5760 min Winter	33.420	0.070	0.0	1.8	1.8	0.5	O K
7200 min Winter	33.412	0.062	0.0	1.5	1.5	0.4	O K
8640 min Winter	33.406	0.056	0.0	1.3	1.3	0.3	O K
10080 min Winter	33.402	0.052	0.0	1.2	1.2	0.3	O K

Storm Event	Rain (mm/hr)	Flooded Volume (m³)	Discharge Volume (m³)	Time-Peak (mins)
30 min Winter	91.962	0.0	66.2	32
60 min Winter	58.739	0.0	84.6	62
120 min Winter	36.170	0.0	104.2	118
180 min Winter	26.810	0.0	115.8	174
240 min Winter	21.529	0.0	124.0	226
360 min Winter	15.827	0.0	136.7	286
480 min Winter	12.701	0.0	146.3	364
600 min Winter	10.699	0.0	154.1	442
720 min Winter	9.295	0.0	160.6	520
960 min Winter	7.438	0.0	171.4	654
1440 min Winter	5.422	0.0	187.4	896
2160 min Winter	3.945	0.0	204.5	1212
2880 min Winter	3.143	0.0	217.3	1500
4320 min Winter	2.279	0.0	236.2	2152
5760 min Winter	1.811	0.0	250.4	2872
7200 min Winter	1.516	0.0	262.0	3576
8640 min Winter	1.312	0.0	272.0	4264
10080 min Winter	1.161	0.0	280.8	5032

©1982-2020 Innovyze

Rainfall Details

Rainfall Model	FSR	Winter Storms	Yes
Return Period (years)	100	Cv (Summer)	1.000
Region	England and Wales	Cv (Winter)	1.000
M5-60 (mm)	20.000	Shortest Storm (mins)	15
Ratio R	0.355	Longest Storm (mins)	10080
Summer Storms	Yes	Climate Change %	+45

Time Area Diagram

Total Area (ha) 0.144

Time (mins) From:	To:	Area (ha)
0	4	0.144

©1982-2020 Innovyze

Model Details

Storage is Online Cover Level (m) 34.440

Complex Structure

Pipe

Diameter (m) 0.600 Length (m) 27.000
Slope (1:X) 450.000 Invert Level (m) 33.350

Pipe

Diameter (m) 0.600 Length (m) 27.000
Slope (1:X) 450.000 Invert Level (m) 33.360

Pipe

Diameter (m) 0.825 Length (m) 27.000
Slope (1:X) 450.000 Invert Level (m) 33.410

Pipe

Diameter (m) 0.825 Length (m) 27.000
Slope (1:X) 450.000 Invert Level (m) 33.420

Pipe

Diameter (m) 0.825 Length (m) 34.000
Slope (1:X) 486.000 Invert Level (m) 33.470

Pipe

Diameter (m) 0.825 Length (m) 28.000
Slope (1:X) 467.000 Invert Level (m) 33.480

Hydro-Brake® Optimum Outflow Control

Unit Reference	MD-SHE-0089-3500-1015-3500
Design Head (m)	1.015
Design Flow (l/s)	3.5
Flush-Flo™	Calculated
Objective	Minimise upstream storage
Application	Surface
Sump Available	Yes
Diameter (mm)	89
Invert Level (m)	33.350
Minimum Outlet Pipe Diameter (mm)	150
Suggested Manhole Diameter (mm)	1200

©1982-2020 Innovyze

Hydro-Brake® Optimum Outflow Control

Control Points	Head (m)	Flow (l/s)
Design Point (Calculated)	1.015	3.5
Flush-Flo™	0.303	3.5
Kick-Flo®	0.637	2.8
Mean Flow over Head Range	-	3.1

The hydrological calculations have been based on the Head/Discharge relationship for the Hydro-Brake® Optimum as specified. Should another type of control device other than a Hydro-Brake Optimum® be utilised then these storage routing calculations will be invalidated

Depth (m)	Flow (l/s)	Depth (m)	Flow (l/s)	Depth (m)	Flow (l/s)	Depth (m)	Flow (l/s)
0.100	2.7	1.200	3.8	3.000	5.8	7.000	8.6
0.200	3.4	1.400	4.1	3.500	6.2	7.500	8.9
0.300	3.5	1.600	4.3	4.000	6.6	8.000	9.2
0.400	3.5	1.800	4.6	4.500	7.0	8.500	9.5
0.500	3.3	2.000	4.8	5.000	7.4	9.000	9.7
0.600	3.0	2.200	5.0	5.500	7.7	9.500	10.0
0.800	3.1	2.400	5.2	6.000	8.0		
1.000	3.5	2.600	5.4	6.500	8.3		

©1982-2020 Innovyze

Appendix 3

FEH22 and FEH13 Rainfall Comparison

COMPARISON OF FEH22 VS FEH13 RAINFALL DEPTHS

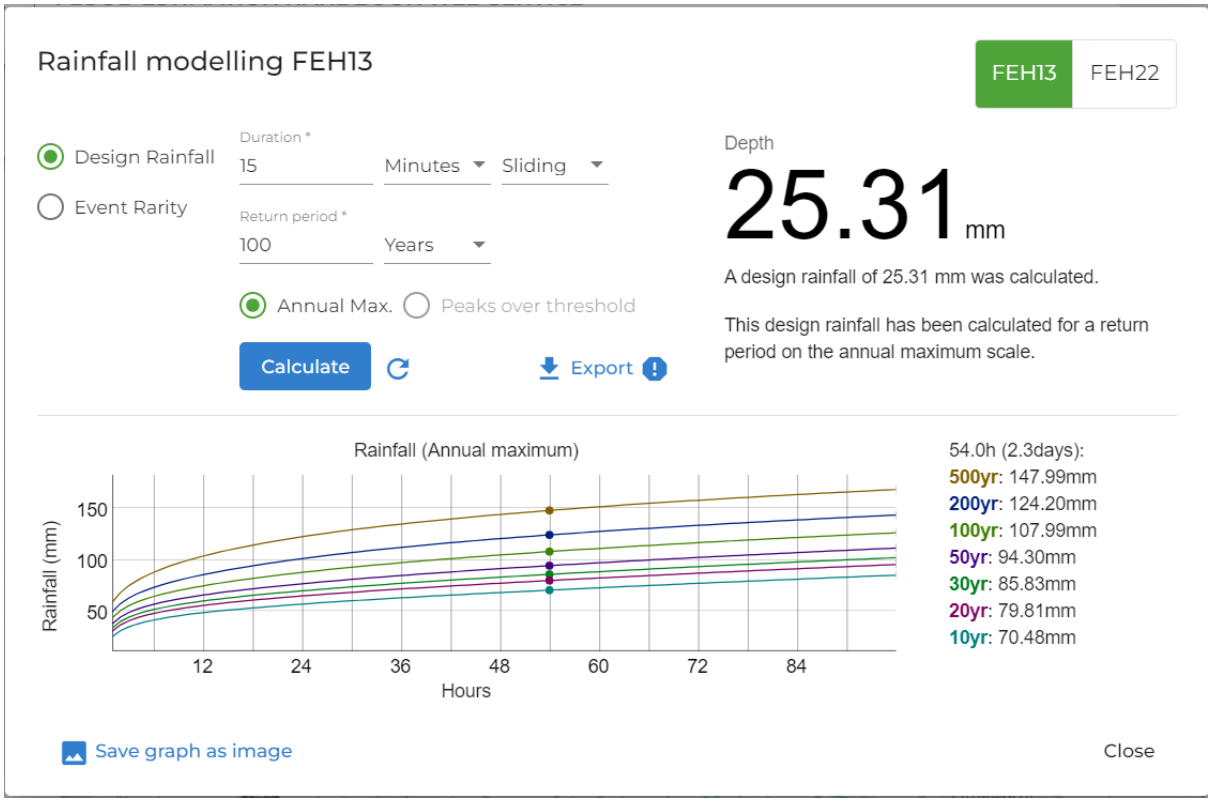

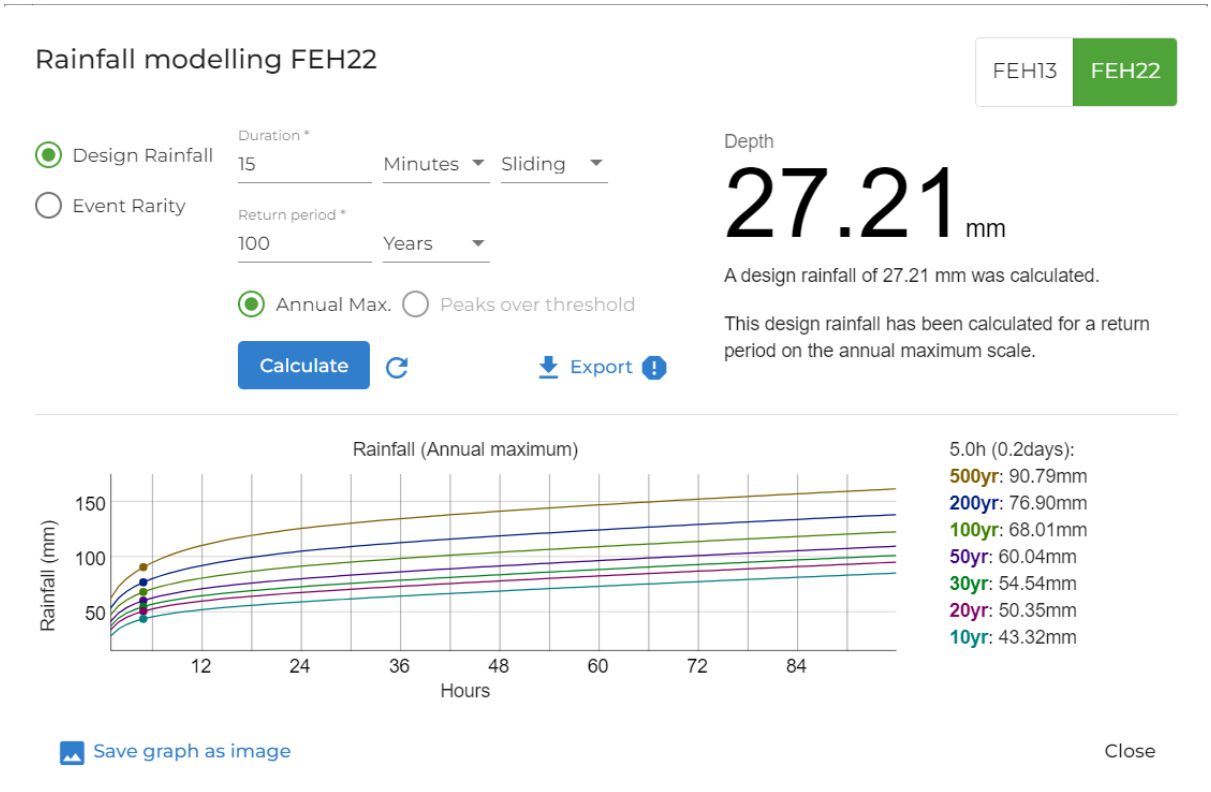

FEH22 / FEH13 = 27.21 / 25.31 = 1.075;

FEH22 rainfall approximately 8% greater than equivalent FEH13

COMPARISON OF FEH22 VS FEH13 RAINFALL DEPTHS

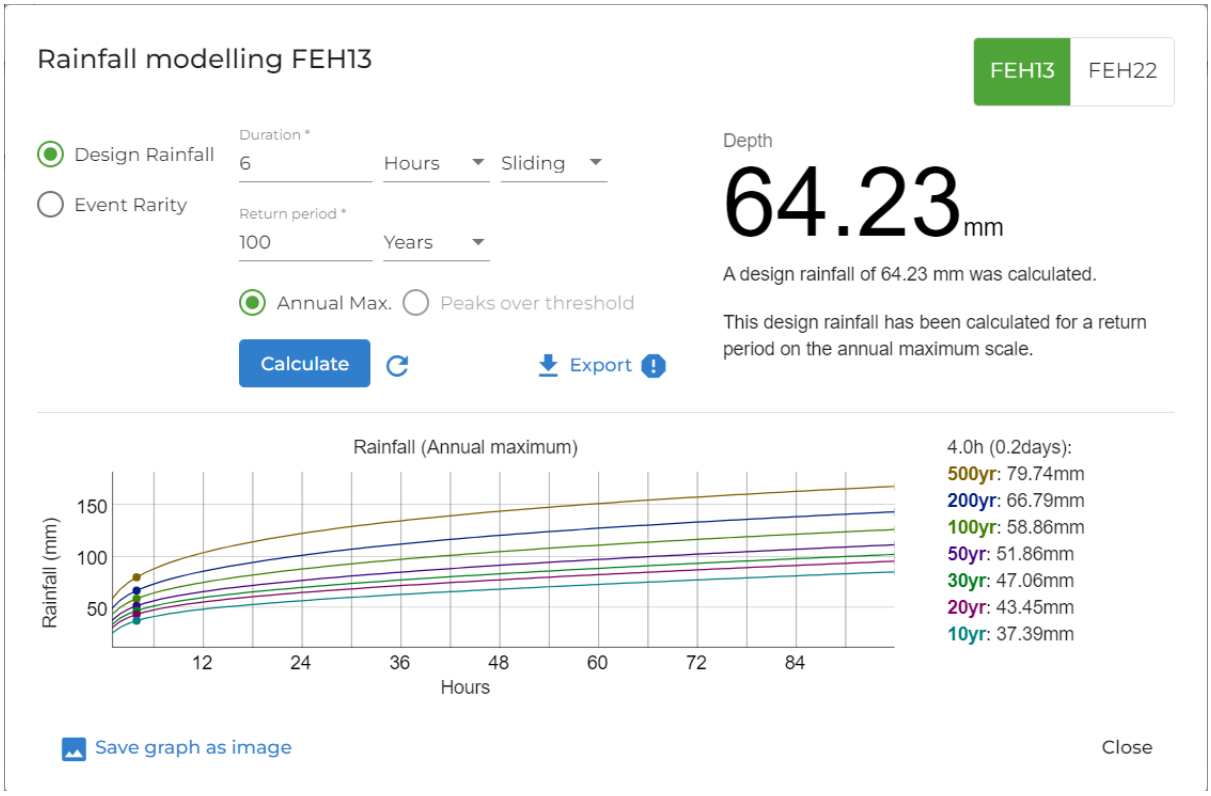

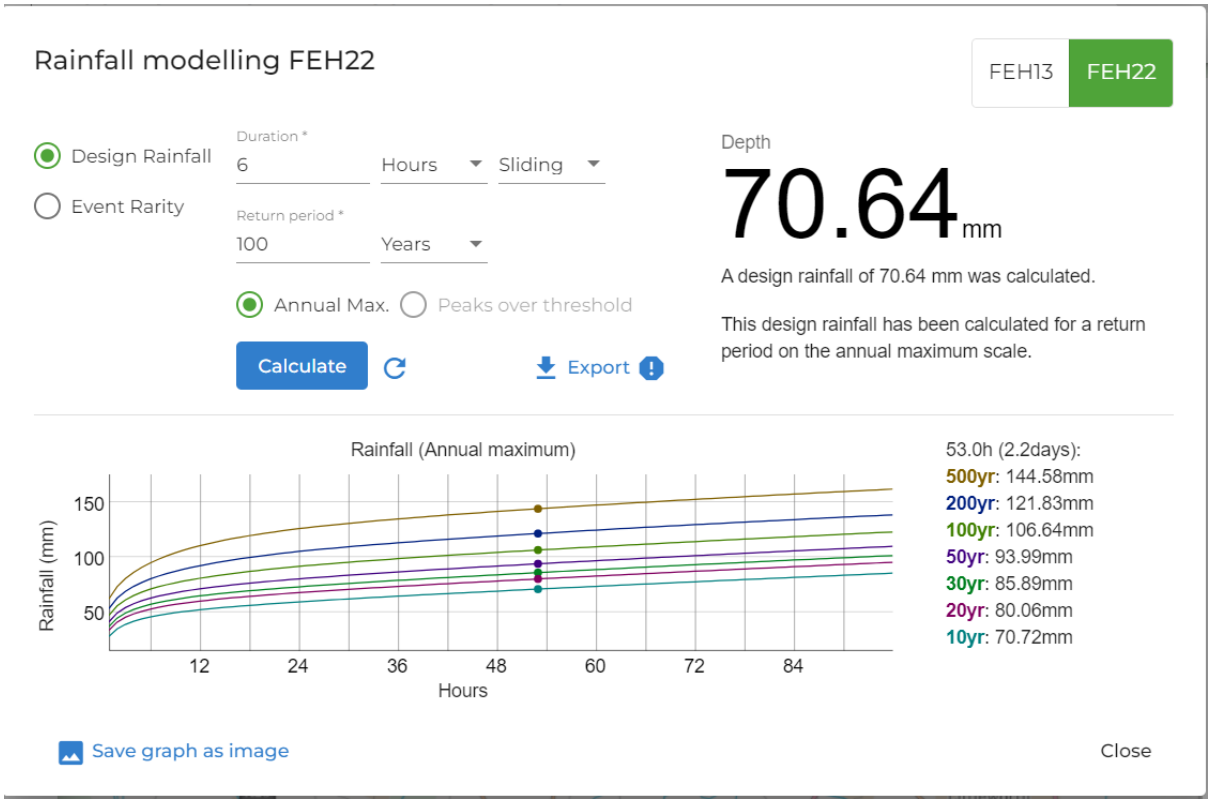

FEH22 / FEH13 = 70.64 / 64.23 = 1.099;

FEH22 rainfall approximately 10% greater than equivalent FEH13

Appendix 4

Aqua-Swirl Datasheet

SDS Limited mitigation indices for stormwater treatment devices November 2018

The pollution mitigation indices are as follows:

Device	Total suspended solids mitigation index	Total metals mitigation index	Soluble metals mitigation index[1]	Hydrocarbons[3]
Aqua-swirl™ vortex grit separator	0.8 (0.5 on trunk roads and motorways where the suspended solids level is very high)	0.5[4]	The Aquaswirl™ is not designed to remove soluble pollutants	0.7[3]
Aqua-filter™ stormwater filtration unit	0.8	0.8	0.6	0.7[3]
Aqua-swirl™ and Aqua-filter™ in sequence	1.2[2]	0.9	0.6	1.0[2,3]
Aqua-Xchange™	0.8 when installed as a layer in a filter drain	0.9	1.0	0.6 when installed as a layer in a filter drain

These indices can only be assumed when the treatment device is properly sized for the anticipated rate of runoff and the level of pollution in the runoff is not unusually high.

[1] When drainage schemes are designed for road developments in accordance with the Design Manual for Roads and Bridges, the mitigation index for soluble metals is required because particulate metals are considered separately in the total suspended solids assessment

[2] When designing in accordance with the SuDS Manual (Ciria C753), when two devices are used in sequence to target the same pollutant, half of the mitigation index of the second component should be allowed in the calculation.

[3] The test procedures applied to manufactured treatment devices do not include measurement of hydrocarbon removal. Therefore, we have estimated that the Aqua-swirl™ removes free-phase hydrocarbons by flotation, and also removes hydrocarbons that are adhered to suspended solids. However, hydrocarbons are known to preferentially adhere to the smaller particles so the Aqua-filter™ will also remove a high proportion of those hydrocarbons as it is more effective at removing smaller suspended particles.

[4] Where metals are present in the runoff in particulate form, particularly from vehicle emissions, the Aqua-swirl™ will effectively remove those particles in admixture with other suspended solids.

Appendix 5

Surface Water System Maintenance Report

Project Name	: Sumners Ponds, Chapel Road, Barns Green, Horsham
Job No	: 23-020
Note Title	: Drainage Maintenance and Management Plan
Author	: AK
Checked	: SW
Approved	: SW
Date	: February 2024

1.0 INTRODUCTION

1.1.1 Odyssey has been commissioned to undertake a drainage maintenance and management plan in respect of the planned development at Sumners Ponds, Chapel Road, Barns Green, Horsham.

1.1.2 The proposed development is for the erection of 32 residential units and creation of access, circulation routes, parking and hard and soft landscaping – all under the planning application number DC/21/2697.

1.1.3 This document was prepared to support the proposed surface water drainage strategy and it should be read with the accompanying drainage strategy drawings.

2.0 MAINTENANCE AND MANAGEMENT PLAN

2.1 General

2.1.1 This section of the document sets out the maintenance and management of the drainage system throughout its lifetime. In all cases, reference should also be made to the manufacturer's inspection and maintenance recommendations.

2.1.2 The drainage system for which this maintenance plan is developed is presented on a drawings contained in **Appendix A**.

2.1.3 The proposed drainage features on site comprise a combination of:

- Geocellular attenuation tank;
- Traditional pipe systems, oversized storage pipes, gullies, manholes and silt traps;
- Flow controls;
- Detention basin;
- Rainwater harvesting tanks;
- Proprietary Treatment Devices.

2.1.4 It is anticipated that most of the surface water drainage system across this development would remain private and therefore responsibility for it would remain either with the homeowner (where drainage would serve single dwelling only) or with the management company (for shared elements of the drainage system). Responsibility for any adopted features would rest with the adopting authority and their detailed maintenance is outside of the scope of this note.

2.1.5 This document has been divided into sections which correspond to each relevant drainage type detailing:

- Description of feature
- Maintenance activities and frequency
- Inspection and frequency

2.2 Geocellular Attenuation Tank

2.2.1 An attenuation tank is used to create a below-ground void space for the temporary storage of surface water before controlled release off-site.

2.2.2 The attenuation tanks proposed would be constructed from geocellular units and will comprise dedicated chambers allowing for a partial internal inspection.

2.2.3 A schedule for maintenance of an attenuation tank is shown in **Table 2.1**.

Table 2.1: Geocellular Attenuation Tank - Maintenance Activities and Frequency

Maintenance Category	Maintenance Activity	Frequency
Regular Maintenance	Inspect and identify any areas that are not operating correctly. If required take remedial action	Monthly for three months then annually
	Remove debris from the catchment surface (where it may cause risks to performance)	Monthly
	Remove sediment from the upstream silt traps	Annually or as required
Remedial Actions	Repair / rehabilitate inlets, outlet and vents	As required
Monitoring	Inspect / check all inlets, outlets and vents to ensure that they are in good condition and operating as designed	Annually
	Survey inside of tank for sediment build-up and remove if necessary	Every five years or as required

2.3 Traditional Pipe Systems, Oversized Storage Pipes, Gullies, Drainage Channels, Manholes, Silt Traps, Outlets/Inlets (with associated headwalls)

2.3.1 Drainage systems comprising of pipe runs, oversized storage pipes, manholes, gullies, outlets/inlets (also with associated headwalls) and silt traps are a more conventional method of draining surface water run-off from impermeable areas.

2.3.2 Surface water falling on impermeable areas, such as roofs, roads and footways, drain to gutters and downpipes or at surface level to gullies (and/or drainage channels) which convey the water below ground to the main drainage network. Manholes are also provided on the main drainage system at regular intervals, changes in sewer direction, gradient or pipe diameter. This type of drainage system can be accessed from the gullies or manholes for routine inspection and maintenance.

2.3.3 Where incorporated, gullies (and/or drainage channels) are to be 'trapped' such that on collecting and conveying surface water they trap sediment and prevent any unpleasant odours returning from the sewers.

2.3.4 A schedule for maintenance is shown in **Table 2.2**.

Table 2.2: Traditional Pipe Systems, Oversized Storage Pipes, Gullies, Manholes, Silt Traps, Outlets/Inlets (with associated headwalls) - Maintenance Activities and Frequency

Maintenance Category	Maintenance Activity	Frequency
Regular Maintenance	Inspect and identify any areas that are not operating correctly	Monthly (for the first three months) then annually
	Remove debris from gratings, sumps/silt traps	Annually
	Inspect inlets and outlets (with associated headwalls if appropriate) for evidence of blockage and/or physical damage	Monthly
	Cleaning/jetting	As required
Remedial Actions	Clear blockages and/or repair damage	As required
	Clearing of sumps and silt traps	Annually (or six monthly if blocked annually)

2.4 Flow Controls

2.4.1 A flow control device usually comprises of a fixed orifice or an alternative form of throttle such as a vortex flow control unit (i.e. Hydro-Brake). Its main function is to throttle the discharge passed downstream and thereby retain water upstream within associated storage facilities.

2.4.2 The vortex flow controls provide a non-linear flow curve and as such, can respond to both high and low intensity rainfall events.

2.4.3 This site utilises vortex flow control devices (Hydro-Brake or similar) and would contain sumps within the flow control chambers.

2.4.4 Normally, little maintenance is required as there are no moving parts within the flow control devices and generally if blockages occur, they do so at the intake and can be due to poor installation or upstream treatment of water entering the system.

2.4.5 The vortex flow control is to be fitted with a pivoting by-pass door, which allows the manhole chamber to be drained down should blockages occur.

2.4.6 A schedule for maintenance of a flow control device is shown in **Table 2.3**.

Table 2.3: Flow Control Device – Maintenance Activities and Frequency

Maintenance Category	Maintenance Activity	Comments	Frequency
Regular Maintenance	Inspect and identify any areas that are not operating correctly		Monthly (for the first three months) then six monthly
	Remove sediment from silt trap (sump)		Six monthly or as required
	Hose down unit/chamber		Six monthly or as required
	Check mechanical devices within associated chambers	Pivoting bypass door check to ensure manhole can be drained in the event of a blockage	Six monthly
	Inspect all inlets/outlets, to check they are in good condition and operating as designed		Annually or as required
Remedial Actions	Clear blockages		As required

2.5 Detention Basin

2.5.1 Detention basin is a landscape depression that is normally dry except during and immediately following a storm event.

2.5.2 A flow control system at the outfall controls the rates of discharge causing the basin to fill during storm events.

2.5.3 A schedule for maintenance of a detention basin is shown in **Table 2.4**.

Table 2.4: Detention Basin – Maintenance Activities and Frequency *(continued overleaf)*

Maintenance Category	Maintenance Activity	Comments	Frequency
Regular Maintenance	Litter and debris removal	Litter & debris to be removed prior to any grass cutting activity to minimise risk of shredding litter. Particular attention should be paid to inlet pipes and grilles (if in place)	Monthly
	Grass cutting: landscaped areas, spillways and access routes	All cuttings to be removed from basin	Monthly (during growing season) or as required
	Grass cutting: meadow grass	All cuttings to be removed from basin	Six monthly (Spring before nesting season, and Autumn)
	Remove sediment from inlets and outlets		One to three years or as required
	Manage other vegetation and remove nuisance plants	Weeding should be conducted by hand or use non-toxic and biodegradable weed killer. Invasive species should be removed in accordance with best practice	Monthly (at implementation) then as required
	Inspect inlets, outlets, banksides, structures, pipework, etc for evidence of blockage and/or physical damage		Monthly
	Inspect silt accumulation rates in any silt trap and establish appropriate removal frequencies	Undertake contamination testing once some build-up has occurred to inform management and disposal options	Six monthly or as required
	Tidy all dead growth before start of growing season		Annually

Maintenance Category	Maintenance Activity	Comments	Frequency
Occasional Maintenance	Re-seed or replant areas of poor vegetation growth		As required
	Prune and trim trees and remove cuttings – if applicable		As required
	Remove sediment from inlets, outlets and main basin when required	Sediment level will be dependent upon presence and type of upstream SUDS, size and land use of catchment as well as local soil conditions.	Every five years or as required
Remedial Actions	Repair erosion or other damage		As required
	Repair/rehabilitation of inlets and outlets		As required

2.6 Rainwater Harvesting Tank

2.6.1 Rainwater harvesting (RWH) is the collection of rainwater runoff for use.

2.6.2 Runoff on this site is collected from roofs.

2.6.3 RWH tanks on this site are a pumped system type, i.e. the rainwater runoff is stored underground and then is pumped out for supply purposes.

2.6.4 A schedule for maintenance of a RWH tank is shown in **Table 2.5**.

Table 2.5: Rainwater Harvesting Tank - Maintenance Activities and Frequency

Maintenance Category	Maintenance Activity	Frequency
Regular Maintenance	Inspection of the tank for debris and sediment build-up, inlets/outlets/withdrawal devices, overflow areas, pumps, filters	Annually (and following poor performance) or as per manufacturer's recommendation
	Cleaning of tanks, inlets, outlets, gutters, withdrawal devices and roof drain filters of silts and other debris	Annually (and following poor performance) or as per manufacturer's recommendation
Occasional Maintenance	Cleaning and/or replacement of any filters	Three monthly (or as required)
Remedial Actions	Repair of overflow erosion damage or damage to tank	As required
	Pump repairs	As required

2.7 Proprietary Treatment Devices

2.7.1 Proprietary treatment device is a manufactured product that removes specific pollutants from surface water run-off.

2.7.2 Proprietary treatment devices on this site are using hydrodynamic separation technology and are mainly targeting suspended solids, metals and hydrocarbons.

2.7.3 The use of proprietary treatment devices on this site is necessary to meet the Water Quality 'pillar' of the SuDS design approach.

2.7.4 A schedule for maintenance of a proprietary treatment device tank is shown in **Table 2.6**

Table 2.6: Proprietary Treatment Device - Maintenance Activities and Frequency

Maintenance Category	Maintenance Activity	Frequency
Regular Maintenance	Remove litter and debris and inspect for sediment, oil and grease accumulation	Six monthly
	If present - change the filter media	As per manufacturer's recommendation
	Remove sediment, oil, grease and floatables	As necessary – indicated by system inspections or immediately following significant spill
Remedial Actions	Replace malfunctioning parts or structures	As required
Monitoring	Inspect for evidence of poor operation	Six monthly
	If present – inspect filter media and establish appropriate replacement frequencies	Six monthly
	Inspect sediment accumulation rates and establish appropriate removal frequencies	Monthly during first half year of operation, then every six months

3.0 FINANCIAL MANAGEMENT OF DRAINAGE MAINTENANCE

3.1 Financial Management and Maintenance Costs

3.1.1 The private management company will collect funds through estate charges (monthly, annually or as appropriate) from all residents to cover costs for the ongoing maintenance of all shared elements of the drainage system.

3.1.2 Within the estates charges a contingency pot/sinking fund will accumulate monies which will cover costs for unforeseen maintenance/repairs and the future replacement of any major components at the end of the manufacturers recommended design life.

3.1.3 In the event that the management company (or any subsequent management company) is no longer able to fulfil its duties, then the responsibility will remain with all homeowners to form or appoint a new management company.

APPENDIX A

Drainage Drawings

LEGEND:

- SITE BOUNDARY
- FWMH - PUBLIC FOUL WATER MANHOLE UNDER SECTION 106/104
- FWMH - FOUL WATER MANHOLE (PCC RINGS) - MIN 1.2m DIA
- FW-IC3 - FOUL WATER INSPECTION CHAMBER - MIN 0.45m DIA
- FW-IC4 - FOUL WATER INSPECTION CHAMBER - MIN 0.25m DIA
- SWMH - SURFACE WATER MANHOLE (PCC RINGS) - MIN 1.2m DIA
- SW-IC3 - SURFACE WATER INSPECTION CHAMBER - MIN 0.45m DIA
- SW-IC4 - SURFACE WATER INSPECTION CHAMBER - MIN 0.25m DIA
- RODDING EYE
- BACKDROP
- EXISTING PUBLIC FOUL WATER SEWER
- 100Ø 1/12 FOUL WATER DRAINAGE
- 225Ø 1/199 SURFACE WATER DRAINAGE
- SURFACE WATER DRAINAGE CHANNEL I.E ACO M100D 0.0 (OR SIMILAR APPROVED) OR AS PER NOTE IF DIFFERENT
- SURFACE WATER FILTER DRAIN TYPE 1 - PERFORATED PIPE LAID FLAT
- SURFACE WATER FILTER DRAIN TYPE 2 - PERFORATED PIPE LAID FLAT
- S38 SURFACE WATER MANHOLE
- S38 SURFACE WATER DRAIN
- S38 ATTENUATION PIPE
- S38 ROAD GULLY
- S38 HEADWALL
- ROAD GULLY
- SW CHAMBER WITH MINIMUM 300mm DEEP SILT TRAP
- FC FLOW CONTROL CHAMBER
- ATTENUATION TANK
- INDICATIVE RAINWATER HARVESTING TANK (RWH) - 3000 LITRES
- INDICATIVE RAINWATER HARVESTING TANK (RWH) - 10000 LITRES
- CHAMBER WITH FILTER AND SILT TRAP, I.E. SEL ENVIRONMENTAL WASP04320 (OR SIMILAR)
- BACKFALL RWH HARVESTING TANK OVERFLOW TO BE CONNECTED WITH BACKFALL TO ACHIEVE CONNECTION LEVEL
- (T) PROPRIETARY TREATMENT DEVICE (I.E. AQUA SWIRL FROM SDS OR SIMILAR)

KEY TO HEALTH AND SAFETY SYMBOLS

ABNORMAL OR UNUSUAL RESIDUAL RISKS ASSOCIATED WITH THE DESIGN OUTCOMES SHOWN ON THIS DRAWING MAYBE INDICATED BY MEANS OF THE FOLLOWING SYMBOLS.

- INDICATES A RESIDUAL RISK REQUIRING A COMPULSORY ACTION.
- INDICATES A RESIDUAL RISK FOR INFORMATION.
- INDICATES A RESIDUAL RISK REQUIRING A PROHIBITIVE ACTION.
- INDICATES A RESIDUAL RISK AS A WARNING.

SHEET PLAN

N

DRAINAGE CHANNEL CONNECTED TO THE ATTENUATION TANK. OUTLET FROM DRAINAGE CHANNEL TO BE VIA PROPRIETARY SILT TRAP

ORDINARY WATERCOURSE CONSENT MIGHT BE REQUIRED FOR INSTALLATION OF THE HEADWALL

GEOCELLULAR ATT TANK 1 PLAN DIMS: 14m x 8m HEIGHT: 0.4m IL IN 32.500 IL OUT 32.400

CONTINUOUS UNDERGROUND GAS PIPE

UNDERGROUND GAS PIPE ENTERING SITE

ACO DRAINAGE CHANNEL - MULTIDRAIN M100D 30.0 (OR SIMILAR WITH THE SAME FLOW CAPABILITIES)

ORDINARY WATERCOURSE CONSENT MIGHT BE REQUIRED FOR INSTALLATION OF THE HEADWALL

EXISTING CULVERT OUTLET HEADWALL TO BE EXAMINED AND REPLACED IF DEEMED NECESSARY. ORDINARY WATERCOURSE CONSENT WOULD BE REQUIRED FOR REPLACEMENT OF THE HEADWALL

DITCH IL 32.990

NEW MANHOLE INSTALLED ON-LINE OF THE EXISTING CULVERT. ORDINARY WATERCOURSE CONSENT IS REQUIRED FOR INSTALLATION OF THE MANHOLE.

HANGING ELECTRIC CABLES

CULVERT/PIPED DITCH UNDER THE ROAD NEED TO BE SURVEYED HERE TO DETERMINE WHETHER IT CLASHES WITH PROPOSED DRAINAGE

RWP TO DISCHARGE ONTO RWP GULLY - TO PROVIDE SW SYSTEM EMERGENCY OVERFLOW

ACO DRAINAGE CHANNEL - MULTIDRAIN M100D 10.0 (OR SIMILAR WITH THE SAME FLOW CAPABILITIES) CONNECTED TO THE ATTENUATION TANK

ACO DRAINAGE CHANNEL - MULTIDRAIN M100D 10.0 (OR SIMILAR WITH THE SAME FLOW CAPABILITIES) CONNECTED TO THE ATTENUATION TANK

ACO DRAINAGE CHANNEL - MULTIDRAIN M100D 10.0 (OR SIMILAR WITH THE SAME FLOW CAPABILITIES) CONNECTED TO THE ATTENUATION TANK

GEOCELLULAR ATT TANK 7 PLAN DIMS: 198m² HEIGHT: 0.235m IL 34.290 (AT DOWNSTREAM END) IL 34.340 (AT UPSTREAM END)

BLACK DASHED LINE INDICATES TANK AREA WITH HEIGHT OF 0.235m USE PERMAVOID (OR SIMILAR) FOR STRUCTURAL CAPABILITIES

GEOCELLULAR ATT TANK 8 (CONNECTED TO AND LEVEL WITH ATT TANK 7 AT BASE LEVEL) PLAN DIMS: 90m² HEIGHT: 0.15m IL 34.340 (AT DOWNSTREAM END) IL 34.390 (AT UPSTREAM END)

USE PERMAVOID (OR SIMILAR) FOR STRUCTURAL CAPABILITIES)

GEOCELLULAR ATT TANK 3 (LOCATED BELOW DETENTION BASIN) PLAN AREA: 285m² HEIGHT: 0.6m IL OUT 32.750

DETENTION BASIN OUTLINE. REFER TO ENGINEERING LAYOUT FOR DETAILED LEVELS AND SHAPE

HANGING ELECTRIC CABLES

GEOCELLULAR ATT TANK 2 PLAN DIMS: 24m x 4m HEIGHT: 0.4m IL IN 32.700 IL OUT 32.600

RWP ADDED TO FEED RWH TANK

GEOCELLULAR ATT TANK 4 PLAN DIMS: 6m x 5m HEIGHT: 0.4m IL 32.650

GEOCELLULAR ATT TANK 6 PLAN DIMS: 12m x 2.5m HEIGHT: 0.45m IL IN 32.880 IL OUT 32.820 USE PERMAVOID (OR SIMILAR) FOR STRUCTURAL CAPABILITIES

GEOCELLULAR ATT TANK 5 PLAN DIMS: 21m x 15m HEIGHT: 0.4m IL IN 32.940 IL OUT 32.820

FWMH S801 CL 33.01 IL 31.31 225mm DIA OUT

UNDERGROUND GAS PIPE EXITING SITE

ATT TANK UPSTREAM END IL 32.900

LOWEST ROAD GULLIES PICKED UP BY THE S38 SYSTEM. SURFACE WATER RUN-OFF BELOW THESE GULLIES TO DRAIN ONTO S278 BELLMOUTH ACCESS

ELECTRICITY POLE WITH HANGING OVERHEAD CABLES

ACO DRAINAGE CHANNEL - MULTIDRAIN M150D 20.0 (OR SIMILAR WITH THE SAME FLOW CAPABILITIES)

FWMH 5701 CL 34.21 IL 31.81 225mm DIA OUT

Chapel Road

INVERT TO INVERT CONNECTION

ALL CONNECTIONS INVERT TO INVERT

GEOCELLULAR ATT TANK 9 PLAN DIMS: 186m² HEIGHT: 0.385m IL 34.470 (AT DOWNSTREAM END) IL 34.520 (AT UPSTREAM END)

BLACK DASHED LINE INDICATES TANK AREA WITH HEIGHT OF 0.385m USE PERMAVOID (OR SIMILAR) FOR STRUCTURAL CAPABILITIES

GEOCELLULAR ATT TANK 10 (CONNECTED TO AND LEVEL WITH ATT TANK 9 AT BASE LEVEL) PLAN DIMS: 90m² HEIGHT: 0.15m IL 34.520 (AT DOWNSTREAM END) IL 34.570 (AT UPSTREAM END)

USE PERMAVOID (OR SIMILAR) FOR STRUCTURAL CAPABILITIES)

ENDCAP OUTLET TYPE MAIN CHANNEL TO BE USED

FOR CONTINUATION REFER TO DRAWING 23-020-202

NOTES

1. CDM REGULATIONS 2015
(i) IN COMPLIANCE WITH CDM 2015 ODYSSEY HAS FOLLOWED IT'S DESIGN RISK MANAGEMENT PROCESS FOR HAZARD ELIMINATION AND RISK REDUCTION IN DEVELOPING THE ODYSSEY DESIGNS SHOWN ON THIS DRAWING.
(ii) THERE ARE EXISTING SERVICES AT OR CLOSE TO THE PROPOSED WORKS AND THESE ARE INDICATED ON DRAWING. ANY OTHER RESIDUAL RISKS ARE THOSE THAT WOULD NORMALLY BE EXPECTED BY COMPETENT PERSONS OR CONTRACTORS WITH NECESSARY SKILLS KNOWLEDGE AND EXPERIENCE TO BE ENGAGED ON WORK OF THIS NATURE OR TYPE.
2. THIS DRAWING IS TO BE READ IN CONJUNCTION WITH ALL OTHER RELATED DRAWINGS ISSUED BY THE ARCHITECT AND ENGINEER.
3. DO NOT SCALE FROM THIS DRAWING. WORK FROM FIGURED DIMENSIONS ONLY.
4. ALL DIMENSIONS SHOWN IN METRES UNLESS NOTED OTHERWISE.
5. IF THERE IS ANY AMBIGUITY BETWEEN THE SPECIFICATION AND THE DRAWINGS OR ANY OTHER DISCREPANCIES ARE FOUND THESE SHOULD BE REPORTED TO THE ENGINEER AND/OR CLIENT IMMEDIATELY SO THAT CLARIFICATION CAN BE SOUGHT PRIOR TO THE COMMENCEMENT OF WORK.
6. ALL DRAINAGE WORKS SUBJECT TO S104 AGREEMENT TO BE CARRIED OUT IN ACCORDANCE WITH THE SEWERAGE SECTOR GUIDANCE, DESIGN AND CONSTRUCTION GUIDANCE (CURRENT VERSION).
7. PRIVATE FOUL WATER AND SURFACE WATER DRAINAGE IS TO BE CONSTRUCTED IN ACCORDANCE WITH THE BUILDING REGULATIONS AND BS EN 752.
8. EXISTING LAND, DRAINAGE FEATURES AND GROUND LEVELS (SHOWN TO AN ORDNANCE DATUM) ARE BASED ON THE CLIENT'S SUPPLIED TOPOGRAPHICAL SURVEY BY 'InCo Surveys' DATED DECEMBER 2020 (PROJECT No. S20264). ODYSSEY ASSUMES NO RESPONSIBILITY ON THE LEVEL OF ACCURACY OF SURVEY INFORMATION PROVIDED. THE CONTRACTOR IS TO CONFIRM THE EXISTING CONDITIONS MATCH THOSE SHOWN ON THE SURVEY AND INFORM ODYSSEY OF ANY DISCREPANCIES SHOULD THEY ARISE.
9. ALL CHAMBERS/MANHOLES IMMEDIATELY UPSTREAM OF ATTENUATION TANKS TO INCORPORATE SILT TRAP.
10. UNLESS SPECIFIED OTHERWISE ALL FOUL AND SURFACE WATER DRAINAGE PIPES TO BE 100mm DIA WITH MINIMUM GRADIENTS OF 1/80 (FOR FOUL) AND 1/100 (FOR SURFACE WATER) RESPECTIVELY.
11. FOR PIPES WHERE MINIMUM COVER IN ACCORDANCE WITH BUILDING REGULATIONS PART H TABLES 8 TO 10 IS NOT MET CONCRETE SLAB / CONCRETE SURROUND PROTECTION MUST BE ADDED OR DUCTILE IRON PIPES USED INSTEAD.
12. ALL RWP'S TO HAVE RODDING ACCESS.
13. FOR SVP's IT IS ASSUMED THAT THE INVERT OF THE TAIL OF THE BEND AT THE FOOT OF THE STACK WILL BE 0.45m BELOW FFL FOR ALL SINGLE DWELLINGS. FOR BLOCK OF FLATS THIS IS ASSUMED TO BE 0.75m BELOW FFL.
14. IT IS ASSUMED THAT ANY BRANCH DISCHARGE PIPE FOR SINGLE DWELLINGS WILL NOT DISCHARGE INTO A STACK LOWER THAN 450mm ABOVE THE INVERT OF THE TAIL OF THE BEND AT THE FOOT OF THE STACK. FOR BLOCK OF FLATS THIS IS ASSUMED TO BE 750mm.
15. PRIVATE INSPECTION CHAMBER SIZES ARE TO BE IN ACCORDANCE WITH THE NHBC STANDARDS SECTION 5.3, TABLES 3 AND 4 OR WHERE APPLICABLE BUILDING REGULATIONS PART H; TABLE 11 AND TABLE 12.
16. INSPECTION CHAMBERS LOCATED WITHIN AREAS OF BLOCK PAVING TO HAVE INSET/INFILL TYPE OF COVER.
17. ALL DRAINAGE TESTING REQUIRED IS TO BE CARRIED OUT AT THE CONTRACTORS EXPENSE.
18. DRAINS IN AREAS OF MADE GROUND TO BE CONSTRUCTED BY FIRST MAKING UP THE AREA TO APPROXIMATELY FINISHED LEVEL AND THEN EXCAVATE THROUGH THE FILL MATERIAL INTO UNDISTURBED GROUND. THE DRAIN TRENCH IS THEN TO BE BACKFILLED TO FORMATION LEVEL USING SUITABLE GRANULAR FILL MATERIAL WELL COMPACTED IN LAYERS NOT EXCEEDING 225 THICK.
19. CONTRACTOR TO SURVEY FOR AND LOCATE THE POSITION AND DEPTH OF ALL SERVICES ACROSS THE SITE BEFORE COMMENCING ANY WORKS.
20. STATUTORY SERVICE DIVERSION WORKS - IF DEEMED NECESSARY - TO BE AGREED WITH THE APPROPRIATE STATUTORY UNDERTAKER.
21. TREE PROTECTION PLAN MUST BE CONSULTED PRIOR TO DRAINAGE WORKS AND ANY POTENTIAL CLASHES REPORTED TO THE CLIENT / ENGINEER AND ARBORICULTURIST IMMEDIATELY.
22. FOR MANHOLE SCHEDULES REFER TO DRAWING 23-020-203.

FOR INFORMATION ONLY - NOT FOR CONSTRUCTION

Rev	Amendments	Drn	Chk	App	Date
C	UPDATES TO SOUTHERN PARCEL ATTENUATION SYSTEM AND ATTENUATION TANKS No.6 AND 1 AND ASSOCIATED DRAINAGE	AK	SW	SW	29.01.24
B	DRAINAGE SCHEME UPDATED AS PER CLIENT'S COMMENTS	AK	SW	SW	16.10.23
A	SOUTHERN PARCEL DRAINAGE UPDATED	AK	SW	SW	10.10.23

ODYSSEY
Unit 1 Pucksall Farm
Dores Lane
Braishfield
Romsey SO51 0QJ
Telephone: 01794 537980
Fax: 01256 331134
E: info@odysseyconsult.co.uk
W: www.odysseyconsult.co.uk

Job Title
SUMNERS POND, CHAPEL ROAD, BARNS GREEN, HORSHAM

Drawing Title
DRAINAGE LAYOUT SHEET 1

Client
SIGMA HOMES

Scale	Date	Designed
1:250 @ A1	SEP 23	AK
Drawn	Checked	Approved
AK	SW	SW
Job No	Drawing No	Rev
23-020	23-020-201	C

P:\23-020 - Sumners Pond, Barns Green, Horsham\Tech\Acad\Drawings\23-020-201 Drainage Layout.dwg

LEGEND:

- SITE BOUNDARY
- FWMH - PUBLIC FOUL WATER MANHOLE UNDER SECTION 106/104
- FWMH - FOUL WATER MANHOLE (PCC RINGS) - MIN 1.2m DIA
- FW-IC3 - FOUL WATER INSPECTION CHAMBER - MIN 0.45m DIA
- FW-IC4 - FOUL WATER INSPECTION CHAMBER - MIN 0.25m DIA
- SWMH - SURFACE WATER MANHOLE (PCC RINGS) - MIN 1.2m DIA
- SW-IC3 - SURFACE WATER INSPECTION CHAMBER - MIN 0.45m DIA
- SW-IC4 - SURFACE WATER INSPECTION CHAMBER - MIN 0.25m DIA
- RODDING EYE
- B BACKDROP
- EXISTING PUBLIC FOUL WATER SEWER
- 100Ø 1/12 FOUL WATER DRAINAGE
- 225Ø 1/199 SURFACE WATER DRAINAGE
- SURFACE WATER DRAINAGE CHANNEL I.E ACO M100D 0.0 (OR SIMILAR APPROVED) OR AS PER NOTE IF DIFFERENT
- SURFACE WATER FILTER DRAIN TYPE 1 - PERFORATED PIPE LAID FLAT
- SURFACE WATER FILTER DRAIN TYPE 2 - PERFORATED PIPE LAID FLAT
- S38 SURFACE WATER MANHOLE
- S38 SURFACE WATER DRAIN
- S38 ATTENUATION PIPE
- S38 ROAD GULLY
- S38 HEADWALL
- ROAD GULLY
- ST SW CHAMBER WITH MINIMUM 300mm DEEP SILT TRAP
- FC FLOW CONTROL CHAMBER
- ATTENUATION TANK
- INDICATIVE RAINWATER HARVESTING TANK (RWH) - 3000 LITRES
- INDICATIVE RAINWATER HARVESTING TANK (RWH) - 10000 LITRES
- CHAMBER WITH FILTER AND SILT TRAP, I.E. SEL ENVIRONMENTAL WASP04320 (OR SIMILAR)
- BACKFALL RWH HARVESTING TANK OVERFLOW TO BE CONNECTED WITH BACKFALL TO ACHIEVE CONNECTION LEVEL
- T PROPRIETARY TREATMENT DEVICE (I.E. AQUA SWIRL FROM SDS OR SIMILAR)

KEY TO HEALTH AND SAFETY SYMBOLS

ABNORMAL OR UNUSUAL RESIDUAL RISKS ASSOCIATED WITH THE DESIGN OUTCOMES SHOWN ON THIS DRAWING MAYBE INDICATED BY MEANS OF THE FOLLOWING SYMBOLS.

- INDICATES A RESIDUAL RISK REQUIRING A COMPULSORY ACTION.
- INDICATES A RESIDUAL RISK FOR INFORMATION.
- INDICATES A RESIDUAL RISK REQUIRING A PROHIBITIVE ACTION.
- INDICATES A RESIDUAL RISK AS A WARNING.



NOTES

1. CDM REGULATIONS 2015
(i) IN COMPLIANCE WITH CDM 2015 ODYSSEY HAS FOLLOWED IT'S DESIGN RISK MANAGEMENT PROCESS FOR HAZARD ELIMINATION AND RISK REDUCTION IN DEVELOPING THE ODYSSEY DESIGNS SHOWN ON THIS DRAWING.
(ii) THERE ARE EXISTING SERVICES AT OR CLOSE TO THE PROPOSED WORKS AND THESE ARE INDICATED ON DRAWING. ANY OTHER RESIDUAL RISKS ARE THOSE THAT WOULD NORMALLY BE EXPECTED BY COMPETENT PERSONS OR CONTRACTORS WITH NECESSARY SKILLS KNOWLEDGE AND EXPERIENCE TO BE ENGAGED ON WORK OF THIS NATURE OR TYPE.
2. THIS DRAWING IS TO BE READ IN CONJUNCTION WITH ALL OTHER RELATED DRAWINGS ISSUED BY THE ARCHITECT AND ENGINEER.
3. DO NOT SCALE FROM THIS DRAWING. WORK FROM FIGURED DIMENSIONS ONLY.
4. ALL DIMENSIONS SHOWN IN METRES UNLESS NOTED OTHERWISE.
5. IF THERE IS ANY AMBIGUITY BETWEEN THE SPECIFICATION AND THE DRAWINGS OR ANY OTHER DISCREPANCIES ARE FOUND THESE SHOULD BE REPORTED TO THE ENGINEER AND/OR CLIENT IMMEDIATELY SO THAT CLARIFICATION CAN BE SOUGHT PRIOR TO THE COMMENCEMENT OF WORK.
6. ALL DRAINAGE WORKS SUBJECT TO S104 AGREEMENT TO BE CARRIED OUT IN ACCORDANCE WITH THE SEWERAGE SECTOR GUIDANCE, DESIGN AND CONSTRUCTION GUIDANCE (CURRENT VERSION).
7. PRIVATE FOUL WATER AND SURFACE WATER DRAINAGE IS TO BE CONSTRUCTED IN ACCORDANCE WITH THE BUILDING REGULATIONS AND BS EN 752.
8. EXISTING LAND, DRAINAGE FEATURES AND GROUND LEVELS (SHOWN TO AN ORDNANCE DATUM) ARE BASED ON THE CLIENT's SUPPLIED TOPOGRAPHICAL SURVEY BY 'InCo Surveys' DATED DECEMBER 2020 (PROJECT No. S20264). ODYSSEY ASSUMES NO RESPONSIBILITY ON THE LEVEL OF ACCURACY OF SURVEY INFORMATION PROVIDED. THE CONTRACTOR IS TO CONFIRM THE EXISTING CONDITIONS MATCH THOSE SHOWN ON THE SURVEY AND INFORM ODYSSEY OF ANY DISCREPANCIES SHOULD THEY ARISE.
9. ALL CHAMBERS/MANHOLES IMMEDIATELY UPSTREAM OF ATTENUATION TANKS TO INCORPORATE SILT TRAP.
10. UNLESS SPECIFIED OTHERWISE ALL FOUL AND SURFACE WATER DRAINAGE PIPES TO BE 100mm DIA WITH MINIMUM GRADIENTS OF 1/80 (FOR FOUL) AND 1/100 (FOR SURFACE WATER) RESPECTIVELY.
11. FOR PIPES WHERE MINIMUM COVER IN ACCORDANCE WITH BUILDING REGULATIONS PART H TABLES 8 TO 10 IS NOT MET CONCRETE SLAB / CONCRETE SURROUND PROTECTION MUST BE ADDED OR DUCTILE IRON PIPES USED INSTEAD.
12. ALL RWP'S TO HAVE RODDING ACCESS.
13. FOR SVP's IT IS ASSUMED THAT THE INVERT OF THE TAIL OF THE BEND AT THE FOOT OF THE STACK WILL BE 0.45m BELOW FFL FOR ALL SINGLE DWELLINGS. FOR BLOCK OF FLATS THIS IS ASSUMED TO BE 0.75m BELOW FFL.
14. IT IS ASSUMED THAT ANY BRANCH DISCHARGE PIPE FOR SINGLE DWELLINGS WILL NOT DISCHARGE INTO A STACK LOWER THAN 450mm ABOVE THE INVERT OF THE TAIL OF THE BEND AT THE FOOT OF THE STACK. FOR BLOCK OF FLATS THIS IS ASSUMED TO BE 750mm.
15. PRIVATE INSPECTION CHAMBER SIZES ARE TO BE IN ACCORDANCE WITH THE NHBC STANDARDS SECTION 5.3, TABLES 3 AND 4 OR WHERE APPLICABLE BUILDING REGULATIONS PART H; TABLE 11 AND TABLE 12.
16. INSPECTION CHAMBERS LOCATED WITHIN AREAS OF BLOCK PAVING TO HAVE INSET/INFILL TYPE OF COVER.
17. ALL DRAINAGE TESTING REQUIRED IS TO BE CARRIED OUT AT THE CONTRACTORS EXPENSE.
18. DRAINS IN AREAS OF MADE GROUND TO BE CONSTRUCTED BY FIRST MAKING UP THE AREA TO APPROXIMATELY FINISHED LEVEL AND THEN EXCAVATE THROUGH THE FILL MATERIAL INTO UNDISTURBED GROUND. THE DRAIN TRENCH IS THEN TO BE BACKFILLED TO FORMATION LEVEL USING SUITABLE GRANULAR FILL MATERIAL WELL COMPACTED IN LAYERS NOT EXCEEDING 225 THICK.
19. CONTRACTOR TO SURVEY FOR AND LOCATE THE POSITION AND DEPTH OF ALL SERVICES ACROSS THE SITE BEFORE COMMENCING ANY WORKS.
20. STATUTORY SERVICE DIVERSION WORKS - IF DEEMED NECESSARY - TO BE AGREED WITH THE APPROPRIATE STATUTORY UNDERTAKER.
21. TREE PROTECTION PLAN MUST BE CONSULTED PRIOR TO DRAINAGE WORKS AND ANY POTENTIAL CLASHES REPORTED TO THE CLIENT / ENGINEER AND ARBORICULTURIST IMMEDIATELY.
22. FOR MANHOLE SCHEDULES REFER TO DRAWING 23-020-203.

FOR INFORMATION ONLY - NOT FOR CONSTRUCTION

Rev	Amendments	Drn	Chk	App	Date
A	UPDATES TO SOUTHERN PARCEL ATTENUATION SYSTEM	AK	SW	SW	29.01.24

ODYSSEY
Unit 1 Pucknall Farm
Dores Lane
Braishfield
Romsey SO51 0QJ
Telephone: 01794 537980
Fax: 01256 331134
E: info@odysseyconsult.co.uk
W: www.odysseyconsult.co.uk

Job Title
SUMNERS POND, CHAPEL ROAD, BARNS GREEN, HORSHAM

Drawing Title
DRAINAGE LAYOUT SHEET 2

Client
SIGMA HOMES

Scale	Date	Designed
1:250 @ A1	OCT 23	AK
Drawn	Checked	Approved
AK	SW	SW
Job No	Drawing No	Rev
23-020	23-020-202	A

P:\23-020 - Sumners Pond, Barns Green, Horsham\Tech\Acad\Drawings\23-020-201 Drainage Layout.dwg