Lower Broadbridge Farm
Broadbridge Heath

Arboricultural Method Assessment

November 2026
12790_AMS.001 Rev D

Project Details	
Client:	Taylor Wimpey South Thames
Project:	Lower Broadbridge Farm, Broadbridge Heath
Report Title:	Arboricultural Method Statement
Project Number:	12790
File Reference:	12790_AMS.001 Rev D
Date:	03/11/2026

Copyright

The copyright of this document remains with Aspect Arboriculture Ltd. All rights reserved. The contents of this document therefore must not be copied or reproduced in whole or in part for any purpose without the written consent of Aspect Arboriculture Ltd.

Limitations

This assessment has been prepared in respect of the proposed development and should not be interpreted as a report on tree health and safety. Reasonable effort has been made to identify visible defects whilst undertaking the tree survey; trees are however, prone to natural failure without warning therefore no guarantee can be made as to the absolute safety of any of the trees surveyed. Aspect's opinion of tree condition and structural potential is therefore valid for a limited period of 12 months from the date of inspection. Validity is assumed in the absence of inclement weather and no change to the trees' existing context. Reliance should not be given to comments made in respect of other disciplines i.e. landscape, ecology or civil engineering without first consulting an appropriate expert.

Liability

This report has been prepared for the exclusive use of the commissioning client and unless otherwise agreed in writing by Aspect Arboriculture Ltd. no other party may use, or rely on the contents of the report. No liability is accepted by Aspect Arboriculture Ltd. for any use of this report, other than for the purposes for which it was originally prepared and provided. No warranty, express or implied, is made as to the advice in this report. The content of this report is partly based on information provided by third parties. Unless otherwise stated, information obtained from any third party has not been independently verified by Aspect Arboriculture Ltd.

Contact Details

Aspect Arboriculture Ltd.
Hardwick Business Park I Noral Way I Banbury I Oxfordshire I OX16 2AF
t 01295 276066 f 01295 265072 e info@aspect-arbor.com
w www.aspect-arbor.com

Contents

Text:

1 Introduction 3

1.1 Background 3
1.2 Statutory Designations 3
1.3 Scope 4
1.4 Limitations 4
1.5 Detailed Design 4

2 Essential Works 5

2.1 Tree Protection Plan 5
2.2 Tree Removals 6
2.3 Pruning Works 6
2.4 Protective Barriers 7
2.5 Supervised Excavation 7
2.6 CellWeb Surfaces 8
2.7 Contingency Procedures 9
2.8 Proposed Order of Works 9
2.9 Site Managers Point of Contact for Arboricultural Input 10

3 Conclusions 11

Figures:

Figure 1. Plots 12 to 21 in relation to boundary trees T215 – T236.

Tables:

Table 1. Tree Removals by BS5837:2012 Category

Appendices:

Appendix A: Tree Protection Plan (12790 TPP 01 Rev D)
Appendix B: Works Auditing Schedule (12790 WAS 01)
Appendix C: Tree Survey Schedule (12790 TS 01)
Appendix D: Barrier Specifications

1 Introduction

1.1 Background

1.1.1 Aspect Arboriculture are commissioned by Taylor Wimpey South Thames to prepare an Arboricultural Method Statement and Tree Protection Plan (hereafter the AMS and TPP) to inform the development of Lower Broadbridge Farm, Broadbridge Heath.

1.1.2 The purpose of the document is to clearly identify the extent of tree removal and retention put forward and to demonstrate how retained trees will be protected during construction, pursuant to condition 10 of appeal decision APP/Z3825/W/23/3321658, and condition 11 of the S73 application (ref. DC/25/1886).

1.1.3 Condition 11 reads:

'No development shall commence, including ground clearance, or bringing equipment, machinery or materials onto the site, until an Arboricultural Method Statement detailing all trees/hedgerows on site and adjacent to the site to be retained during construction works, and measures to provide for their protection throughout all construction works, has been submitted to and approved in writing by the Local Planning Authority. The details to be submitted shall have regard to the recommendations of the Arboricultural Impact Assessment, Aspect Arboriculture Ltd, 10251_AIA.001 Rev A, dated 26.04.2022 (approved under planning decision notice DC/22/1052).

The development shall, thereafter, be implemented and thereafter carried out at all times strictly in accordance with the agreed details.

Any trees or hedges on the site, identified for retention, which die or become damaged during the construction process, shall be replaced with trees or hedging plants of a type, size and in positions agreed by the Local Planning Authority.'

1.1.4 The AMS will be submitted to, and approved by, Horsham District Council, prior to the commencement of any construction works occurring on site. Once approved, the safeguarding measures and works should be implemented as specified and maintained to the Council's satisfaction until completion of development works.

1.1.5 The confident protection of retained trees will be achieved through the use of the appended Tree Protection Plan (appendix A) and Works Auditing Schedule (appendix B), alongside other supporting documents included within appendices C and D.

1.2 Statutory Designations

1.2.1 Background checks have confirmed that the application area does not occur within a Conservation Area and that there are no protected trees within influence of the site (Horsham District Council, February 2026).

1.3 Scope

1.3.1 This work relates to arboriculture therefore reliance should not be given to comments made in respect of other disciplines i.e. civil engineering or construction phasing, without first referencing an appropriate expert.

1.4 Limitations

1.4.1 The document has been prepared to inform safeguarding measures during development and should not be interpreted as a report on tree health and safety. Reasonable effort has been made to identify visible defects whilst carrying out the tree survey, however trees are prone to natural failure without warning; no guarantee can be made as to the absolute safety of any of the trees surveyed.

1.4.2 Aspect's opinion of tree condition and structural potential is valid for limited period from the date of survey. Validity is assumed in the absence of inclement weather and no change to the tree's existing context. A copy of the site's tree survey information is provided within appendix C.

1.5 Detailed Design

1.5.1 As per the approved Arboricutural Impact Assessment (10251_AIA.001 Rev A) and expectation of condition 11, detailed design has progressed to enable comparable relationships with retained trees to those shown at outline stage. The detailed layout has also been prepared to ensure that there will be no additional tree removal required to accommodate the scheme, aside from trees which qualify as BS5837 category U and should be removed on account of their poor physiological or structural condition.

1.5.2 With regards to pre-application advice received from the Council (ref. PE/25/0222), regarding the proposed detailed layout within the south-western corner, alterations have been made to provide an improved interface with the southern boundary fronting Five Oaks Road. This has in turn, resulted in the reorientation of plots (12 to 15) in the southwestern corner of the site to flank the western boundary, although in response to pre-application advice, units have been pulled away from retained trees to ensure there is suitable separation.

1.5.3 Plots to the north (16 to 21) are also offset further from the boundary than proposed at outline stage and gardens have been configured to ensure there will be a degree of choice between receiving sunlight or oversailing canopy and tree shade. The provision of choice is therefore proof of a reasonable relationship; wherein future occupants will be unlikely to pursue unsympathetic or unreasonable tree works. The trees and hedgerow are also shown outside of private ownership. Figure 1 overleaf illustrates BS5837:2012 tree shade arcs from retained trees in relation to plots 12 to 21.

1.5.4 Figure 1. Plots 12 to 21 in relation to boundary trees T215 – T236.



2 Essential Works

2.1 Tree Protection Plan

2.1.1 The Tree Protection Plan (TPP) provided in appendix A will be relied upon during construction of the development. It must be read in conjunction with the entirety of this document.

2.1.2 To prevent avoidable damage occurring to retained trees or erroneous tree loss, a scaled A1 copy of the TPP, accompanied by a copy of this document will be provided to the Site Manager. This will ensure they are able to:

- Clearly identify all retained trees;
- Identify the correct locations for tree protection barriers;
- Identify features of the site that must be prepared/installed under an arboricultural watching brief;
- Request attendance of the Project Arboriculturist on site for site monitoring and to provide advice in case of any emerging issues;

- Demonstrate compliance with the Council's consent for the development by safeguarding trees which are to be retained and enable the Project Arboriculturist to evidence this by completing the Works Auditing Schedule (appendix B).

2.2 Tree Removals

2.2.1 To implement the development proposals, it will be necessary to remove the trees detailed within Table 1 below. This includes category U trees which are recommended for removal on account of their diminished condition and outlook. It is accepted that that there may be ecological value associated with the condition of category U trees which may be desirable to retain, however it is advised that this is achieved in such a way so at to not rely on their retention as standing structures.

2.2.2 Table 1. Tree Removals by BS5837:2012 Category.

Category A	Category B	Category C	Category U
None	None	T237 Field Maple	T185
		T240 Ash	T186
		T272 English Oak	T204
		G16+Δ	T209
		G20+Δ	T238
		G26+	
		H2+Δ	

+ Denotes an assemblage of two or more species (refer to appendix C)
Δ Denotes partial removal of scrub or tree group

2.2.3 Trees to be removed will be spray marked with a red flash by the project arboriculturist. The presence of the appointed arboricultural contractor and Arboricultural Officer are also recommended during this process to safeguard against erroneous felling.

2.2.4 Felling works should be timed to avoid the main nesting season for birds between 1st March and 31st August. If scheduled within this period an ecologist must be present to advise on any necessary protective measures, and to confirm that tree works are not likely to cause disturbance to nesting birds.

2.3 Pruning Works

2.3.1 It will not be necessary to prune any retained trees to accommodate the development proposal. However, should it become necessary to undertake tree works because of unforeseen circumstances during construction, the project arboriculturist will review the requirement and provide a suitable specification of works for agreement with the Council's Arboricultural Officer.

2.4 Protective Barriers

2.4.1 Tree protection barriers are required to safeguard trees from damage during construction works. The specification for protective barriers which are to be installed is illustrated within the TPP at appendix A and as a technical sheet provided within appendix D. The location for protective barriers has been informed by retained trees' canopy extents, root protection areas (RPAs) and the presence of existing site features, with locations illustrated with a dark blue line within the TPP.

2.4.2 There are a number of instances where protective barriers will need to be relocated to secondary positions to facilitate works within the periphery of retained trees RPAs. Where this is necessary, secondary barrier positions are illustrated within the Tree Protection Plan with a dotted pink line.

2.4.3 The Site Manager will be responsible for arranging attendance of the Project Arboriculturist, for the purpose of setting out barriers and for their monitoring during the development; issues will be resolved on site and reported to the Council's Arboricultural Officer by the Project Arboriculturist. Protective barriers must be inspected on a monthly basis, unless otherwise agreed with the Council's Arboricultural Officer.

2.5 Supervised Excavation

2.5.1 To implement the proposals, it will be necessary to undertake excavation works on the periphery of T193, T195, T200, T202, T206, T207, T224, T233, T234, T259, T260, T262, T269 and T271's RPAs, to accommodate small areas of hard surfacing and drainage infrastructure (illustrated within the TPP at appendix A with an orange wash). In addition, where acoustic barriers are to be installed adjacent to Five Oaks Road and the A281, it will be necessary to excavate post holes within some retained trees RPAs.

2.5.2 Where excavation work occurs within RPAs, works must be undertaken sensitively and under arboricultural supervision, adopting the principles within section 7.2 of BS5837:2012. Accordingly, during supervised excavation works within the RPAs of retained trees, the following procedure will be adopted:

I. The breaking up and clearance of the existing soils must be undertaken under arboricultural supervision, using a low impact method of excavation, utilising hand tools, an air-spade, or a vacuum excavator.

II. If necessary, roots that are less than 25mm diameter will be pruned back, preferably to a side branch, using sharp cutting tools in accordance with best practice i.e. using secateurs or pruning saw.

III. During the works the protective bark of larger roots is not to be damaged, until the project arboriculturist has judged whether they can be retained or not.

IV. No roots over 25mm will be pruned without approval of the appointed Project Arboriculturist as they may be integral to tree health and stability. If it becomes necessary to prune roots over 25mm diameter to accommodate site features, the

Project Arboriculturist will provide the Developer and the Council's Arboricultural Officer with appropriate recommendations for remedial action/ management.

V. Any exposed roots which can be retained will be covered in hessian or clean topsoil to protect from dehydration and temperature flux. Hessian is to be removed prior to backfilling.

VI. Areas adjacent to roots that are to be filled with concrete will be lined with an impermeable membrane to prevent concrete leachate coming into contact with tree roots.

VII. Any use of an excavator to complete excavations will occur from outside the trees' RPA (which will be spray-marked on the ground in advance of the works taking place). A toothless bucket will be utilised at all times.

VIII. A record of exposed roots will be made and accompanied by a photographic log.

IX. Should any issues be raised during the works then the Project Arboriculturist will inform the Developer and the Council's Arboricultural Officer, indicating the nature of the problem and recommendations for remedial action (if required).

X. Upon request, written confirmation of the works being undertaken to a satisfactory standard can be provided to the Developer and the Council's Arboricultural Officer by the Project Arboriculturist.

2.6 CellWeb Surfaces

2.6.1 As part of the development, it will also be necessary to new pedestrian surfaces within the RPAs of T207, T208 and T211. Where within RPAs, new surfacing will be formed through reliance on a Cellweb sub-base to prevent compaction, excavation and root severance. Areas where a CellWeb sub-base must be utilised illustrated within the TPP (appendix A) with a purple wash.

2.6.2 CellWeb must be installed manually under arboricultural supervision and adopt the following procedure:

a) The Project Arboriculturist will brief the installation team on the importance of preventing soil compaction, oxygen/moisture restriction and the need for any excavation work within RPAs which may incur unnecessary root severance.

b) Tree protection fencing, trunk hoarding and ground boarding must be installed prior to commencement.

c) Once installed, plant will only be permitted to enter the area once Cells have been laid and filled with angular stone.

d) To prevent migration of the infill material and future loss of structural integrity, the area receiving CellWeb must be covered with a porous geotextile underlay. This is to occur before installation of the cellular confinement system.

e) The cellular confinement system will be staked and expanded across the installation footprint area then cut to size. Up to 50mm of no fines bedding sand can be laid to create a level surface.

f) 4/20mm angular stone will be introduced by a lightweight dumper (1 tonne) tracking only over areas already filled with stone.

g) Edges are to be retained with galvanised steel metal edges, set within a concrete footing poured into the last cell row of CellWeb. The concrete must be prevented from leaching by an impermeable membrane placed beneath the edge row of CellWeb.

2.7 Contingency Procedures

2.7.1 Should there be a breach of the approved tree protection strategy, or a need to deviate from the approved AMS and TPP, it will be critical that the Site Manager seeks the advice of the Project Arboriculturist immediately. In the event of a breach or accidental harm occurring to retained trees, works in the vicinity must be temporarily paused whilst advice is sought from the Project Arboriculturist.

2.7.2 This will require the Project Arboriculturist to visit site to document the breach and/or damage and to provide recommendations for remedial action or management. The incident and remedial action/ management must be reported to and agreed with the Council's Arboricultural Officer before development works recommence in the vicinity of the breach.

2.7.3 Whilst remedial actions/ management are being agreed, tree protection measures must be reinstated as per the approved TPP, with additional temporary protection measures applied as per the advice of the Project Arboriculturist. This may include hessian wrapping, additional protective barriers or additional ground protection, i.e. 100mm bark mulch covering with ground boards or 100mm screened topsoil covering.

2.7.4 Evidence of remedial action/ management being undertaken must also be provided to the Council's Arboricultural Officer.

2.8 Proposed Order of Works

2.8.1 The following order of works must be followed:

i. Pre-commencement site meeting between the Project Arboriculturist, Site Manager and the Council's Arboricultural Officer. Stages of arboricultural auditing/monitoring requirements will be identified/agreed.

ii. Necessary tree removals and pruning to be carried out prior to installation of tree protection barriers and commencement of works in the vicinity.

iii. Tree protection barriers and site hoarding to be installed following removals and prior to works commencing in the vicinity. Upon request, barrier positions can be set-out by the Project Arboriculturist, as detailed within this document.

iv. The Council's Arboricultural Officer shall be informed of the proposed commencement date as soon as possible, to allow the inspection of protection measures.

v. The Site Manager will assume responsibility for arranging the attendance of the Project Arboriculturist to oversee the supervision of construction works within retained trees' RPAs, as detailed at within the Works Auditing Schedule (appendix B).

vi. The Site Manager will also assume responsibility for arranging attendance of the Project Arboriculturist for the monitoring of barriers at monthly intervals for the duration of the development works. Erection of barriers and monitoring is included within the Works Auditing Schedule (appendix B).

2.9 Site Manager's Point of Contact for Arboricultural Input:

2.9.1 Patrick Haythornthwaite (Aspect Arboriculture)

Principal Arboricultural Consultant

Telephone: 01295 276066

Email: patrick.haythornthwaite@aspect-arbor.com

2.9.2 Justin Hodges (Aspect Arboriculture)

Arboricultural Consultant

Telephone: 01295 276066

Email: Justin.Hodges@aspect-arbor.com

3 Conclusions

3.1.1 This document has been prepared in response to condition 10 of appeal decision APP/Z3825/W/23/3321658, and condition 11 of the S73 application (ref. DC/25/1886), concerning the development of land at Lower Broadbridge Farm, Broadbridge Heath. The document has been informed by guidance provided in BS5837:2012 including details of the site's existing trees (updated in February 2026).

3.1.2 Pursuant to the instruction, this document and its supporting work (Appendices A - D) identifies all aspects of the scheme that must be managed to facilitate the confident protection of retained trees during construction.

3.1.3 To ensure confident tree retention, siting of tree protection barriers and the specified construction works must be audited by the Project Arboriculturist; the outcome of these works will be reported to the Council's Arboricultural Officer on completion. These elements are specified within the Works Auditing Schedule (appendix B).

3.1.4 It is Aspect's opinion that, subject to strict adherence to this document, the development can be implemented without incurring harm to retained trees.

APPENDICES

APPENDIX A

TREE PROTECTION PLAN (12790 TPP 01 Rev D)



1:2000 @ A3

0m 20m 40m 80m

KEY:

- Site Boundary
- 15 Tree Numbers
- Tree Canopies
- [8] Category 'U' Trees
- Category 'A' RPA
- Category 'B' RPA
- Category 'C' RPA
- 8 Trees to be Removed
- Tree Protection Barrier
- Tree Protection Barrier (Secondary Specification)
- Tree Protection Barrier (2nd Position)
- Supervised Excavation
- New Hard Surfacing

Note: Trees 160, 164, 167, 168, 177, 179, 181-183, 187, 190, 199-201, 205, 209, 210, 212, 213, 217, 231, 237, 239, 240, 241, 243, 245, 249, 251, 254, 264, 268, 270, 272, 280 have been plotted using measurements onsite in conjunction with aerial imagery. Their locations were not recorded on the topographical survey of the site (drawing ref: 1905017 - Lower Broadbridge Farm Broadbridge Heath Final.dwg).

Note: The RPA footprint for Trees 164-177, 233, 245 & 250 have been displaced to allow for the effect of the adopted highway and existing watercourse. The surface area of the RPA has not been reduced.

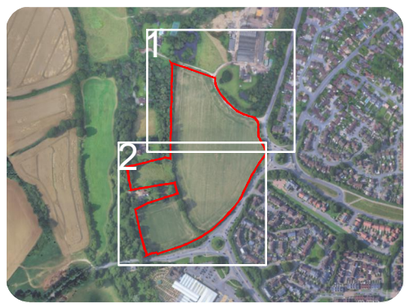

REV	DATE	NOTE	Drawn

REVISIONS

aspect arboriculture

TITLE

Lower Broadbridge Farm, Broadbridge Heath

Tree Protection Plan

CLIENT

TWST

SCALE	DATE	DRAWN
1:2000 @ A3	NOV 2026	GW

DRAWING NUMBER	REVISION
12790 TPP 01 Rev D (Overview)	D

Based on: 7564 - site 261029.dwg
W24149-PER-XX-XX-DR-C-02021 P09.dwg

Default Barrier Specification, cited BS 5837:2012

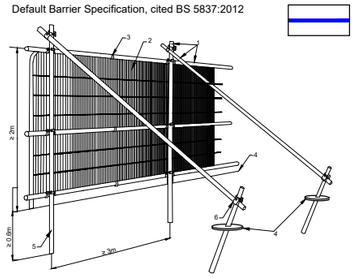

Key
1 Standard scaffold poles
2 Heavy gauge 2m tall galvanized tube and welded mesh infill panels
3 Panels secured to uprights and cross-members with wire ties
4 Ground level
5 Uprights driven into the ground until secure (minimum depth 0.6m)
6 Standard scaffold clamps

Tree Protection Barrier Specification

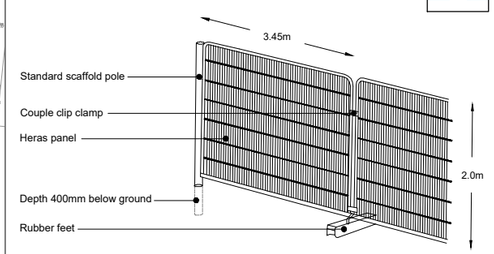

Heras panels supported with pinned rubber feet and driven scaffold pole on every second panel.

1:1000 @ A3

0m 10m 20m 40m

KEY:

- Site Boundary
- 15 Tree Numbers
- Tree Canopies
- [8] Category 'U' Trees
- Category 'A' RPA
- Category 'B' RPA
- Category 'C' RPA
- 8 Trees to be Removed
- Tree Protection Barrier
- Tree Protection Barrier (Secondary Specification)
- Tree Protection Barrier (2nd Position)
- Supervised Excavation
- New Hard Surfacing

Note: Trees 160, 164, 167, 168, 177, 179, 181-183, 187, 190, 199-201, 205, 209, 210, 212, 213, 217, 231, 237, 239, 240, 241, 243, 245, 249, 251, 254, 264, 268, 270, 272, 280 have been plotted using measurements onsite in conjunction with aerial imagery. Their locations were not recorded on the topographical survey of the site (drawing ref: 1905017 - Lower Broadridge Farm Broadridge Heath Final.dwg).

Note: The RPA footprint for Trees 164-177, 233, 245 & 250 have been displaced to allow for the effect of the adopted highway and existing watercourse. The surface area of the RPA has not been reduced.



a. T193, T195, T200 & T202: Footprint of proposed footpath within RPA to be excavated under arboricultural supervision.

a. T269 & T271: Footprint of proposed acoustic fence, road and parking bay within RPA to be excavated under arboricultural supervision.

a. T262: Footprint of proposed acoustic fence and road within RPA to be excavated under arboricultural supervision.

REV	DATE	NOTE	Drawn

REVISIONS

aspect arboriculture

TITLE
Lower Broadbridge Farm, Broadbridge Heath
Tree Protection Plan

CLIENT
TWST

SCALE	DATE	DRAWN
1:1000 @ A3	NOV 2026	GW

DRAWING NUMBER	REVISION
12790 TPP 01 Rev D (1/2)	D

Based on: 7564 - site 261029.dwg
W24149-PER-XX-XX-DR-C-02021 P09.dwg

1:1000 @ A3

0m 10m 20m 40m

KEY:

- Site Boundary
- 15 Tree Numbers
- Tree Canopies
- [8] Category 'U' Trees
- Category 'A' RPA
- Category 'B' RPA
- Category 'C' RPA
- 8 Trees to be Removed
- Tree Protection Barrier
- Tree Protection Barrier (Secondary Specification)
- Tree Protection Barrier (2nd Position)
- Supervised Excavation
- New Hard Surfacing

Note: Trees 160, 164, 167, 168, 177, 179, 181-183, 187, 190, 199-201, 205, 209, 210, 212, 213, 217, 231, 237, 239, 240, 241, 243, 245, 249, 251, 254, 264, 268, 270, 272, 280 have been plotted using measurements onsite in conjunction with aerial imagery. Their locations were not recorded on the topographical survey of the site (drawing ref. 1905017 - Lower Broadbridge Farm Broadbridge Heath Final.dwg).

Note: The RPA footprint for Trees 164-177, 233, 245 & 250 have been displaced to allow for the effect of the adopted highway and existing watercourse. The surface area of the RPA has not been reduced.



a T193, T195, T200 & T202: Footprint of proposed footpath within RPA to be excavated under arboricultural supervision.

a T206-T208 & T211: Introduction of new hard surface within RPA.

a T224: Footprint of proposed retaining wall within RPA to be excavated under arboricultural supervision.

a T233 & T234: Footprint of proposed shared surface within RPA to be excavated under arboricultural supervision.

a T206 & T207: Proposed drainage outfall and culvert within RPA to be excavated under arboricultural supervision.

a T259 & T260: Footprint of proposed footpath and foul water connection within RPA to be excavated under arboricultural supervision.

a T262: and ro arboric

Default Barrier Specification, cited BS 5837:2012

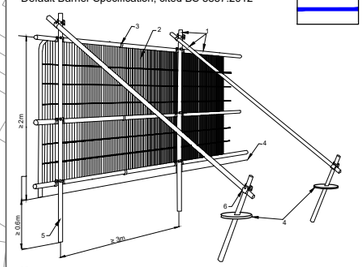

Key
1 Standard scaffold poles
2 Heavy gauge 2m tall galvanized tube and welded mesh infill panels
3 Panels secured to uprights and cross-members with wire ties
4 Ground level
5 Uprights driven into the ground until secure (minimum depth 0.6m)
6 Standard scaffold clamps

Tree Protection Barrier Specification

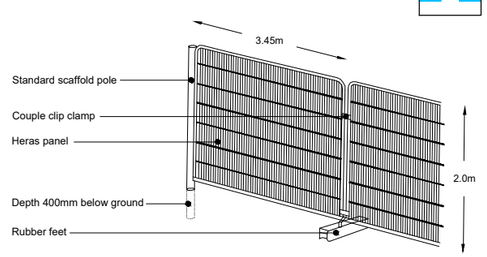

Heras panels supported with pinned rubber feet and driven scaffold pole on every second panel.

REV	DATE	NOTE	Drawn

REVISIONS

aspect arboriculture

TITLE

Lower Broadbridge Farm, Broadbridge Heath

Tree Protection Plan

CLIENT

TWST

SCALE	DATE	DRAWN
1:1000 @ A3	NOV 2026	GW

DRAWING NUMBER	REVISION
12790 TPP 01 Rev D (2/2)	D

Based on: 7564 - site 261029.dwg
W24149-PER-XX-XX-DR-C-02021 P09.dwg

APPENDIX B

WORKS AUDITING SCHEDULE (12790 WAS 01)

WORKS AUDITING SCHEDULE

Works Requiring Auditing	Tree No.	Date Undertaken	Date Reported to LPA
1. Pre-commencement meeting identifying tree removals, tree protection barrier locations and safeguarding measures, as specified within 12790_AMS.001 Rev D and illustrated on drawing no. 12790_TPP.01 Rev D Tree Protection plan.	As drawn		
2: Inspection of tree protection barriers prior to commencement of development works by Project Arboriculturist.	As drawn		
3: Tree Removal and Pruning Works	As drawn		
4: Supervised Excavation	T193 T195 T200 T202 T206 T207 T224 T233 T234 T259 T260 T262 T269 T271		
5: CellWeb Surfaces	T207 T208 T211		
6: Inspection of installed tree protection barriers as specified within 12790_AMS.001 Rev D and illustrated on drawing no. 12790_TPP.01 Rev D Tree Protection plan, on an appropriate basis.	As drawn		

APPENDIX C

TREE SURVEY SCHEDULE (12790 TS 01)

aspect
arboriculture

BS 5837:2012 Tree Schedule: Lower Broadbridge Farm, Broadbridge Heath

12790 TS 01

aspect arboriculture

BS5837:2012 Tree Survey: Explanation of Survey Criteria

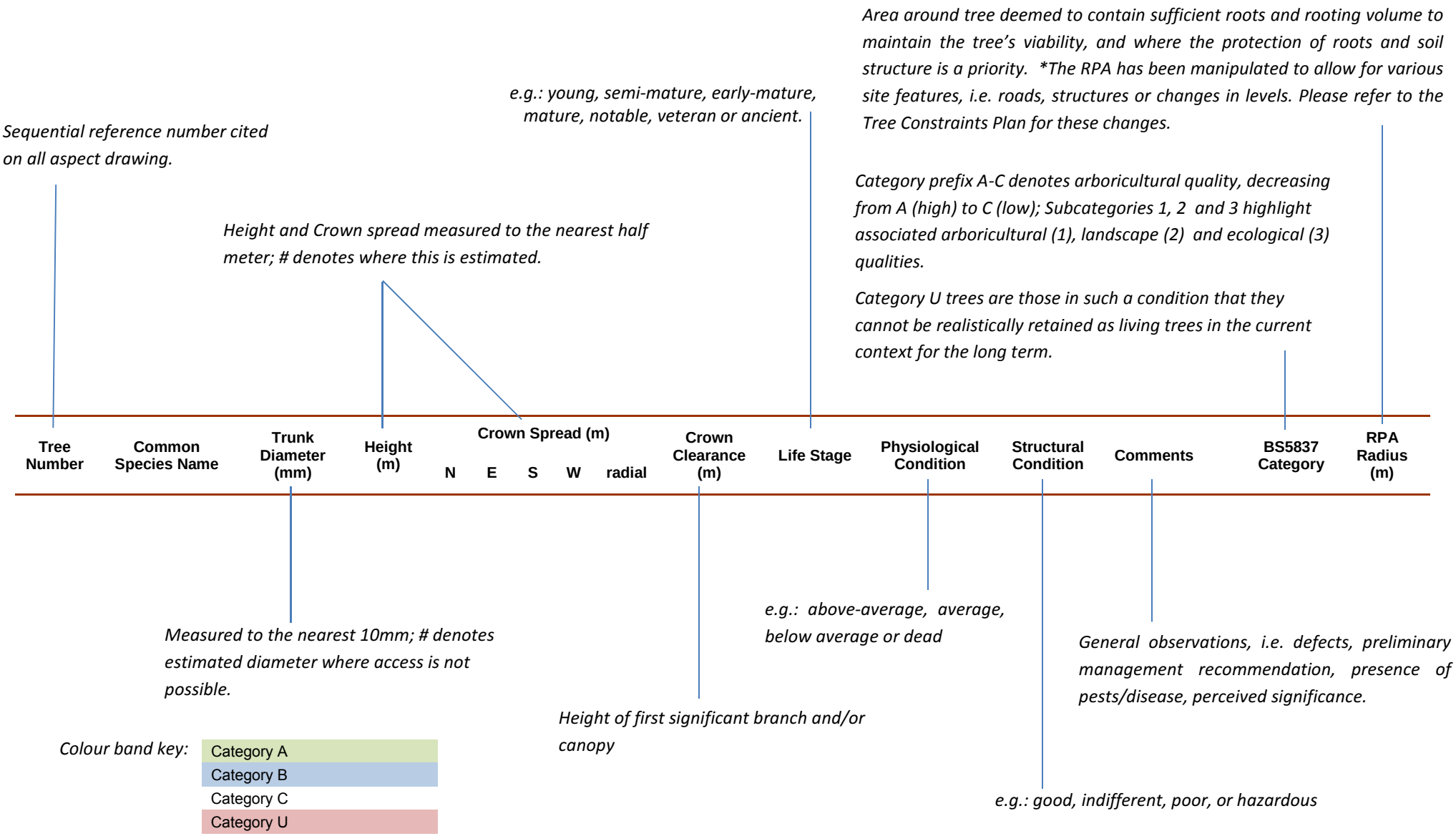

The following survey should not be interpreted as a report on tree health and safety. Aspect's opinion of tree condition and structural potential is valid for a limited period of 12 months from the date of inspection. Validity is assumed in the absence of inclement weather and no change to the trees existing setting. Veteran or ancient trees defined as per the NPPF definition.

Tree Number	Common Species Name	Trunk Diameter (mm)	Height (m)	Crown Spread (m)				Radial	First Significant Branch (m)	Crown Clearance (m)	Life Stage	Physiological Condition	Structural Condition	Comments	BS5837 Category	RPA Radius (m)
				N	E	S	W									
158	English Oak	1000 #	19	11 #	11 #	10 #	10 #		4.5 #	3.5	Mature	Average	Good	Inaccessible, offsite within neighbouring residential land Structure appears typical for species within current context Average internal deadwood Average epicormic growth Well balanced crown Visually prominent individual Good example of species	A12	12
159	English Oak	380	8 #					6 #	1.5 #	1.5 #	Early Mature	Average	Indifferent	Inaccessible, offsite within neighbouring residential land Heavily clad and obscured by Ivy, unable to thoroughly inspect Unsympathetic lower limb removals Squat canopy form Unremarkable example of species	C12	4.5
166	Alder	320 200 150	12	8 #	6.6	3	5 #		1.5	2	Early Mature	Average	Indifferent	Situated on embankment of pond feature Multi stemmed from ground level, unions appear sound Well suited to its riparian setting Unremarkable example of species	C1	4.8*
167	Alder	120 200 oi	11	6.5	5.25	2	2 #		3	2	Semi Mature	Average	Indifferent	Situated on embankment of pond feature Clad and obscured by Ivy, unable to thoroughly inspect Well suited to its riparian setting Unremarkable example of species	C1	2.7*
168	Alder	260 90 oi	11	2.5	5.75	3	2		2	1.5	Early Mature	Average	Indifferent	Situated on embankment of pond feature Well suited to its riparian setting Unremarkable example of species	C1	3.3*
169	Alder	340 150 2*110 100 #	12	4 #	6.5	5.25	6 #		3.25	2	Early Mature	Average	Indifferent	Situated on embankment of pond feature Multi stemmed from ground level, unions appear sound Well suited to its riparian setting Unremarkable example of species	C1	5.1*
170	Ash	250 oi	10	2 #	4.75	3.75	2		2	3	Semi Mature	Average	Indifferent	Situated on embankment of pond feature Clad and obscured by Ivy unable to thoroughly inspect Unbalanced scaffold structure, biased to east Unremarkable example of species	C1	3*
171	Alder	340 330 210 oi	13	4 #	5.75	4.5	5		0.5	0.5	Early Mature	Average	Indifferent	Situated on embankment of pond feature Clad and obscured by Ivy, unable to thoroughly inspect Well suited to its riparian setting Unremarkable example of species	C1	6.3*
172	Alder	190 200 210 oi	11	4 #	3.5	4.25	3		3	3.5	Early Mature	Dead	Hazardous	Situated on embankment of pond feature Clad and obscured by Ivy, unable to thoroughly inspect Standing deadwood	U	N/A
173	English Oak	240 oi	13.5	2 #	3.75	5	2		3.5	3.5	Semi Mature	Average	Indifferent	Situated on embankment of pond feature Structure typical for species within current context Unremarkable example of species	C1	3*

Tree Number	Common Species Name	Trunk Diameter (mm)	Height (m)	Crown Spread (m)				Radial	First Significant Branch (m)	Crown Clearance (m)	Life Stage	Physiological Condition	Structural Condition	Comments	BS5837 Category	RPA Radius (m)
				N	E	S	W									
174	Alder	700 500 220 oi	15.5	6 #	8.25	7.25	6.5		4	5	Mature	Below Average	Poor	Situated on embankment of pond feature Partially clad and obscured by dead Ivy, unable to thoroughly inspect Extensive dieback throughout entire crown Above average internal deadwood Above average epicormic growth Multiple *Ganoderma australe* fruiting bodies throughout bole Considered to be in a state of terminal decline	U	N/A
175	Alder	490 2*190	16	6 #	4.5	4	8		4	3	Mature	Average	Poor	Situated on embankment of pond feature Multi stemmed from ground level, unions appear weak Previous structural failure to co-dominant stem, resulting in open wound within bole with signs of active decay Unremarkable example of species	C1	6.6*
176	Alder	500	18	8 #	5.25	6	6		3.5	4.5	Mature	Average	Indifferent	Situated on embankment of pond feature Clad and obscured by dead Ivy, unable to thoroughly inspect Large scaffold tear out wound at c.4.25m Reduced future potential due to close proximity to overhead utility cables and continuous pressure for pruning works Unremarkable example of species	C1	6
177	Field Maple	360	5.5m	4 #	4.5	4	3.5		1	0.5	Mature	Below Average	Indifferent	Situated on embankment of pond feature Squat canopy form Above average internal deadwood Above average epicormic growth Considered to be of low arboricultural quality	C12	4.2*
178	English Oak											Previously removed				
179	Norway Spruce											Previously removed				
180	Norway Spruce	350 oi	11.5	3.5	4.5	4.5	4.5 #		2.75	0.5	Early Mature	Average	Indifferent	Frontage component of woodland belt Structure typical for species within current context Prominent within moderate distance views	B2	4.2
181	Norway Spruce	340 oi	18	2.5 #	4.5	3 #	3 #		5	0.5	Early Mature	Average	Indifferent	Frontage component of woodland belt Structure typical for species within current context Prominent within moderate distance views	B2	4.2
182	Norway Spruce	430	19	4.75	5.75	4.5 #	5 #		1.75	0.5	Early Mature	Average	Indifferent	Frontage component of woodland belt Structure typical for species within current context Prominent within moderate distance views	B2	5.1
183	Norway Spruce	280	19	5 #	5	3.5 #	5		5	1.5	Early Mature	Average	Indifferent	Frontage component of woodland belt Structure typical for species within current context Prominent within moderate distance views	B2	3.3
184	Norway Spruce	220 oi	11					4	6	4	Semi Mature	Average	Indifferent	Weaker component of collection Clad and obscured by Ivy, unable to thoroughly inspect Suppressed by companion shelter Reduced future potential	C1	2.7
185	Norway Spruce	340	12					5	5	4	Early Mature	Dead	Hazardous	Standing deadwood	U	N/A

Tree Number	Common Species Name	Trunk Diameter (mm)	Height (m)	Crown Spread (m)					First Significant Branch (m)	Crown Clearance (m)	Life Stage	Physiological Condition	Structural Condition	Comments	BS5837 Category	RPA Radius (m)
				N	E	S	W	Radial								
186	Norway Spruce	370 oi	12					4	4.5	4.5	Early Mature	Dead	Hazardous	Standing deadwood	U	N/A
187	Norway Spruce	590 oi	20	6	6.5	6.5 #	6.5 #		3.25	0.5	Mature	Average	Indifferent	Frontage component of woodland belt Structure typical for species within current context Prominent within moderate distance views	B2	7.2
188	Norway Spruce	610 oi	22	4.75	6.75	5	5 #		1.75	0.5	Mature	Average	Indifferent	Frontage component of woodland belt Structure typical for species within current context Prominent within moderate distance views	B2	7.2
189	Norway Spruce	430 oi	20	3.5	4.5	3.5	4 #		3	0.5	Early Mature	Average	Indifferent	Frontage component of woodland belt Structure typical for species within current context Prominent within moderate distance views	B2	5.1
190	Norway Spruce	490 oi	17	4.5	5.75	6.25	5 #		2	0.5	Early Mature	Average	Indifferent	Frontage component of woodland belt Structure typical for species within current context Prominent within moderate distance views	B2	6
191	Norway Spruce	340 oi	14	4.75	5.75	2.75	3		2	1	Early Mature	Average	Indifferent	Weaker component of collection Previously unsympathetically topped at c.5m Considered to be of low arboricultural quality	C1	4.2
192	Norway Spruce	310 oi	16.5	2.5	5	3.5	2.5		4.25	3	Early Mature	Average	Indifferent	Frontage component of woodland belt Structure typical for species within current context Prominent within moderate distance views	B2	3.6
193	Norway Spruce	520 oi	21	6	5 #	3	5.75		2	0.5	Early Mature	Average	Indifferent	Frontage component of woodland belt Structure typical for species within current context Prominent within moderate distance views	B2	6.3
194	Norway Spruce	560 oi	22	2.75	3 #	4	3.5		3.5	0.5	Early Mature	Average	Indifferent	Frontage component of woodland belt Structure typical for species within current context Prominent within moderate distance views	B2	6.6
195	Norway Spruce	590 oi	20.5	3	2.5 #	3	2.5		2.5	0.5	Early Mature	Average	Indifferent	Frontage component of woodland belt Structure typical for species within current context Prominent within moderate distance views	B2	7.2
196	Norway Spruce	360 oi	18	2	2 #	2.25	2.75		4	1	Early Mature	Average	Indifferent	Frontage component of woodland belt Structure typical for species within current context Prominent within moderate distance views	B2	4.2
197	Norway Spruce	460 oi	19	3.25	3 #	2.5	3		2.5	0.5	Early Mature	Average	Indifferent	Frontage component of woodland belt Structure typical for species within current context Prominent within moderate distance views	B2	5.4
198	Norway Spruce	440 oi	19	1.5	2.5 #	3	3.5		2	0.5	Early Mature	Average	Indifferent	Frontage component of woodland belt Structure typical for species within current context Prominent within moderate distance views	B2	5.4
199	Norway Spruce	310 oi	17	2.5	2 #	2	2		2.5	0.5	Early Mature	Average	Indifferent	Frontage component of woodland belt Structure typical for species within current context Prominent within moderate distance views	B2	3.6
200	Norway Spruce	340 oi	18.5	2.25	2.75 #	3.25	3.75		1.75	0.5	Early Mature	Average	Indifferent	Frontage component of woodland belt Structure typical for species within current context Prominent within moderate distance views	B2	4.2

Tree Number	Common Species Name	Trunk Diameter (mm)	Height (m)	Crown Spread (m)					First Significant Branch (m)	Crown Clearance (m)	Life Stage	Physiological Condition	Structural Condition	Comments	BS5837 Category	RPA Radius (m)
				N	E	S	W	Radial								
201	Ash	310	16.5	5	7.75	4.5	2.5		4.75	1	Early Mature	Average	Indifferent	Frontage component of woodland belt Average internal deadwood Leans to east Prominent within moderate distance views	B2	3.6
202	English Oak	820	21	10 #	9.25	3	4.5		2.5	3.25	Mature	Average	Indifferent	Frontage component of woodland belt Above average epicormic growth Crown biased to north and east Prominent within moderate distance views	B2	9.9
203	Ash	520 oi 610 oi	21	4	8.75	3.25	4.5		2.5	3	Mature	Average	Poor	Clad and obscured by Ivy, unable to thoroughly inspect Weaker component of collection Bifurcates from c.0.25m, union tight and included Significant cavity with signs of active decay from ground level to c.2m Woodpecker holes to north co-dominant stem at c.2m Average internal deadwood Above average epicormic growth Unbalanced scaffold structure, biased to east Unremarkable example of species	C1	9.6
204	English Oak	1000#	17	3	8.75	10	6.5		3	3	Mature	Dead	Hazardous	Standing deadwood Inaccessible due to dense Bramble understory Partially clad and obscured by Ivy, unable to thoroughly inspect	U	N/A
205	English Oak	330	11.5	5 #	5.75	7.25	5 #		3 #	3 #	Early Mature	Average	Poor	Dominant component of G18 Inaccessible due to dense understory Scaffold structure biased to south Above average internal deadwood Unremarkable example of species	C1	3.9
206	English Oak	840	21	9	5.5	3	8.25		4.25	6	Mature	Average	Indifferent	Established within internal field boundary Mutually suppressed and cohesive with T207 Unsympathetic pruning to lower canopy Average internal deadwood Minor epicormic growth Visually prominent individual	B2	10.2
207	English Oak	1260	24	10.5	11.75	10 #	11		3.25	2.5	Mature	Below Average	Indifferent	Dominant component of internal field boundary Mutually suppressed and cohesive with T206 Unsympathetic pruning to lower canopy Above average epicormic growth Above average internal deadwood Visually prominent individual	A2	15

Tree Number	Common Species Name	Trunk Diameter (mm)	Height (m)	Crown Spread (m)					First Significant Branch (m)	Crown Clearance (m)	Life Stage	Physiological Condition	Structural Condition	Comments	BS5837 Category	RPA Radius (m)
				N	E	S	W	Radial								
208	English Oak	1540 @ 1m	23	4	5.75	14.75	15		1.5	2.5	Notable	Average	Poor	Principal component of field boundary collection Contributes to screen of neighbouring residential land Minor cavities between buttress flares, some decay Large build up of soil on northern aspect of stem Stem with significant lean south east from ground level Unsympathetic pruning to lower canopy Crown and scaffold structure biased south west Average internal deadwood Average epicormic growth Considered to be of Notable status due to very large girth for the species	A2	15
209	Field Maple	420 290 oi	13	5 #	6	4.5	5 #		0.5	1	Mature	Below Average	Hazardous	Large longitudinal cavity within co-dominant stem to south, resulting in excessive stem movement Above average internal deadwood Above average epicormic growth Anticipate imminent structural failure, unsuitable for retention	U	N/A
210	Ash	340	16	7 #	3.25	6.5	7		2.25	1	Early Mature	Below Average	Poor	Bifurcates from c.1m, union appears included Previous unsympathetic removal of north co-dominant stem Unbalanced scaffold structure Above average epicormic growth Unremarkable example of species	C1	4.2
211	English Oak	1010	16 #	10 #	10 #	10.25	10 #		4	2.5	Mature	Average	Indifferent	Inaccessible, offsite within neighbouring residential land Dominant component of field boundary Unsympathetic pruning to lower crown Average internal deadwood Above average minor epicormic growth Establishing epicormic growth forming lower secondary canopy Visually prominent individual	A2	12
212	Field Maple	2*220 450 #	10	5 #	6 #	5.5	4 #		4 #	1	Mature	Average	Poor	Inaccessible, offsite within neighbouring residential land Multi stemmed from c.1.5m, unions appear tight Failed co-dominant stem to east, still partially attached Considered to be of low arboricultural quality	C1	6.6
213	Holly	290#	10					5.5	1 #	4 #	Mature	Average	Indifferent	Inaccessible, offsite within neighbouring residential land Established ornamental planting Considered to be of low arboricultural quality	C1	3.6
214	Field Maple	3*260#	12	4 #	5	5	5.75		2	1.5	Mature	Average	Indifferent	Inaccessible, offsite within neighbouring residential land Multi stemmed from ground level, unions tight and included Average internal deadwood Unremarkable example of species	C1	5.4
215	English Oak	1200#	24	11 #	11	15	11 #		6 #	4.5 #	Mature	Average	Indifferent	Inaccessible, offsite within neighbouring residential land Slightly sparse canopy at time of survey Minor dieback to tips Storm damage throughout upper canopy Average internal deadwood Structure appears typical for species within current context Visually prominent individual	A2	14.4

Tree Number	Common Species Name	Trunk Diameter (mm)	Height (m)	Crown Spread (m)					First Significant Branch (m)	Crown Clearance (m)	Life Stage	Physiological Condition	Structural Condition	Comments	BS5837 Category	RPA Radius (m)
				N	E	S	W	Radial								
216	Ash	310 350	15	5.75	7	6 #	7.25		4	0.5	Early Mature	Average	Poor	Situated within field boundary Contributes to screen of adjacent access track Clad and obscured by Ivy, unable to thoroughly inspect Bifurcates from ground level, union is over included and fused to c.1.25m Unremarkable example of species	C1	5.7
217	Hawthorn	480 at 1m oi	5	3 #	5.25	3 #	2		2.75	0.5	Mature	Average	Indifferent	Unmanaged hedgerow component Considered to be of low arboricultural quality	C1	5.7
218	Ash	830 oi	20	6.75	`10.5	5.75	9.25		7.5	2	Mature	Below Average	Indifferent	Situated within field boundary Contributes to screen of adjacent access track Clad and obscured by Ivy, unable to thoroughly inspect Young *Ganoderma australe* fruiting body at base of stem Previous unsympathetic crown reduction Above average internal deadwood Visually prominent individual	B2	9.9
219	Hawthorn	220 #	10					4	1.75	1.75	Early Mature	Below Average	Indifferent	Situated within field boundary Contributes to screen of adjacent access track Inaccessible due to dense understory Heavily clad and obscured by Ivy, unable to thoroughly inspect Considered to be of low arboricultural quality	C1	2.7
220	Ash	620 660 oi	18.5	9	5	3.75	8.5		8.25	9	Mature	Below Average	Poor	Situated within field boundary Contributes to screen of adjacent access track Clad and obscured by Ivy, unable to thoroughly inspect Bifurcates from c.1m, previous failure to south co-dominant at c.9.5m Sparse canopy at time of survey Above average epicormic growth Considered to be of low arboricultural quality	C1	10.8
221	English Oak											Previously fallen				
222	Hawthorn	170 130 oi	5.5	4	5	2.5	2.5		0.5	1	Early Mature	Average	Indifferent	Situated within field boundary Unmanaged hedgerow component Considered to be of low arboricultural quality	C12	2.7
223	English Oak											Previously removed				
224	English Oak	1110 oi	15.5	3.5	9	11	1		6.25	5.25	Mature	Below Average	Poor	Situated within field boundary Contributes to screen of adjacent access track Previous failure to west co-dominant stem at c.6m Clad and obscured by Ivy, unable to thoroughly inspect Significant storm damage throughout entire crown, canopy formed by established secondary epicormic growth Extremely sparse canopy at time of survey Unbalanced scaffold structure, biased to east and south Reduced future potential	C1	13.2

Tree Number	Common Species Name	Trunk Diameter (mm)	Height (m)	Crown Spread (m)					First Significant Branch (m)	Crown Clearance (m)	Life Stage	Physiological Condition	Structural Condition	Comments	BS5837 Category	RPA Radius (m)
				N	E	S	W	Radial								
225	Field Maple	750 oi	18	5	7	8.5	5		7	11	Mature	Below Average	Indifferent	Situated within field boundary Contributes to screen of adjacent access track Clad and obscured by dense Ivy, unable to thoroughly inspect Unsympathetic pruning to lower canopy Above average minor internal deadwood Above average minor epicormic growth Individually of limited merit, moderate value as component of wider collective	B2	9
226	Hawthorn	270 oi	7	3.25	3.5	3 #	3.5		2.25	1.5	Mature	Average	Indifferent	Unmanaged hedgerow component Considered to be of low arboricultural quality	C12	3.3
227	Field Maple	440 oi	11.5	7	8.5	2.5	4.5		4.75	3	Mature	Below Average	Poor	Situated within field boundary Contributes to screen of adjacent access track Heavily clad and obscured by Ivy, unable to thoroughly inspect Significant cavity at c.0.5m with signs of active decay Sparse canopy at time of survey Above average internal deadwood Heavily suppressed by T228 Reduced future potential	C12	5.4
228	Field Maple	370 500	18	6	8	4.5	6		4.5	1.75	Mature	Average	Indifferent	Situated within field boundary Contributes to screen of adjacent access track Bifurcates from c.1m, union appears sound Unsympathetic pruning to lower canopy Moderate example of species	B12	7.5
229	Field Maple	460 270 oi	17.5	1	8	7	5		1.5	1	Mature	Below Average	Poor	Situated within field boundary Contributes to screen of adjacent access track Bifurcates from c.0.25m, cavity within union, appears to be occluding well Establishing epicormic growth forming lower secondary canopy Minor dieback to tips Individually of limited merit, moderate value as component of wider collective	B2	6.3
230	English Oak	1230 oi	26	12.25	12.5	9	8		4	6	Mature	Below Average	Poor	Dominant component of field boundary collection Clad and obscured by Ivy, unable to thoroughly inspect Storm damage throughout upper crown Establishing epicormic growth forming lower secondary canopy Senescent *Ganoderma sp.* on western aspect of base Above average internal deadwood Above average epicormic growth Visually prominent individual	A2	14.7
231	Hawthorn	210 oi	6	4.5	2.75	2.5	3.5		2.25	3	Mature	Average	Indifferent	Unmanaged hedgerow component Considered to be of low arboricultural quality	C12	2.4

Tree Number	Common Species Name	Trunk Diameter (mm)	Height (m)	Crown Spread (m)					First Significant Branch (m)	Crown Clearance (m)	Life Stage	Physiological Condition	Structural Condition	Comments	BS5837 Category	RPA Radius (m)
				N	E	S	W	Radial								
232	Field Maple	360 350 oi	11	5	4	4.5	5.5		1.75	1.75	Mature	Below Average	Indifferent	Situated within field boundary Clad and obscured by Ivy, unable to thoroughly inspect Sparse canopy at time of survey Heavily suppressed by T233 Reduced future potential	C12	6
233	English Oak	970	25.5	9.5	6.5	7.25	6		7	5.5	Mature	Average	Indifferent	Dominant component of field boundary collection, Barb wire enveloped by lower stem at c.1m Slightly sparse canopy at time of survey Establishing epicormic growth forming lower secondary canopy Average internal deadwood Visually prominent individual	A2	11.7
234	Field Maple	420 490 oi	14.5	8.5	8.25	4 #	4.75		2.75	1.75	Mature	Average	Poor	Established within field boundary Clad and obscured by Ivy, unable to thoroughly inspect Bifurcates from ground level, union appears sound 1no. co-dominant stem reduced to c. 1.5m Average internal deadwood Minor epicormic growth Unbalanced scaffold structure and canopy, biased to north and east Considered to be of low arboricultural quality	C1	7.8
235	Ash	200 oi	12.5	1	2.25	3	1.75		6	5.5	Semi Mature	Below Average	Indifferent	Situated within field boundary Self-set specimen Unremarkable example of species	C12	2.4
236	Ash	240	15	2.25	3.5	5	2		3.25	2	Semi Mature	Average	Indifferent	Situated within field boundary Self-set specimen Unremarkable example of species	C12	3
237	Field Maple	120 150 90 3*50 #	8.5					5	1.5 #	4.25	Early Mature	Average	Indifferent	Unmanaged hedgerow component Inaccessible due to dense understory Unremarkable example of species	C12	2.4
238	English Oak	850#	13.5	4.75	6	6.75	7.5		2.5	4.5	Mature	Dead	Hazardous	Standing deadwood Inaccessible due to dense understory	U	N/A
239	Field Maple	210 #	10	2.5 #	2	3.5	2.75		4 #	4	Early Mature	Average	Indifferent	Unmanaged hedgerow component Inaccessible due to dense understory Unremarkable example of species	C12	2.4
240	Ash	180	7.5	2.25	2.5	2	2.25		1.75	1.75	Semi Mature	Average	Indifferent	Establishing boundary planting Readily replaceable at current size Considered to be of low arboricultural value	C12	2.1
241	Sycamore	120	4					1.25	1	1.5	Young	Average	Indifferent	Self-set specimen Readily replaceable at current size Considered to be of low arboricultural value	C12	1.5

Tree Number	Common Species Name	Trunk Diameter (mm)	Height (m)	Crown Spread (m)					First Significant Branch (m)	Crown Clearance (m)	Life Stage	Physiological Condition	Structural Condition	Comments	BS5837 Category	RPA Radius (m)
				N	E	S	W	Radial								
242	Sycamore	260	9	2.5	2.5	3.75	3.75		2.25	1.5	Semi Mature	Average	Indifferent	Situated within roadside grass verge Multiple unsympathetic limb removals to east canopy Unsympathetic flail management to lower west canopy Above average epicormic growth Unremarkable example of species	C12	3
243	Sycamore	120	3.5	1	0.5	1.75	3.5		1.5	1.5	Semi Mature	Average	Indifferent	Situated within roadside grass verge Multiple unsympathetic limb removals to east canopy Unsympathetic flail management to lower west canopy Above average epicormic growth Readily replaceable at current size Unremarkable example of species	C12	1.5
244	Sycamore	210	10	2.5	1.25	3	4.5		3	1.75	Semi Mature	Average	Indifferent	Situated within roadside grass verge Multiple unsympathetic limb removals to east canopy Unsympathetic flail management to lower west canopy Above average epicormic growth Unremarkable example of species	C12	2.4
245	Sycamore	150 240	8.5	5.25	2.75	2.75	4.75		2	1.75	Early Mature	Average	Poor	Situated within roadside grass verge Multiple unsympathetic limb removals to east canopy Unsympathetic flail management to lower west canopy Above average epicormic growth Bifurcates from ground level, union included Unremarkable example of species	C12	3.3*
246	Sycamore	170 120 80	7.5	2.25	2.75	3.5	3		1.5	1.5	Semi Mature	Average	Indifferent	Situated within roadside grass verge Multiple unsympathetic limb removals to east canopy Unsympathetic flail management to lower west canopy Above average epicormic growth Multi stemmed from ground level, unions included Unremarkable example of species	C12	2.7
247	Sycamore	175	9	2	1.75	2.25	3		1	2	Semi Mature	Average	Indifferent	Situated within roadside grass verge Multiple unsympathetic limb removals to east canopy Unsympathetic flail management to lower west canopy Above average epicormic growth Impact wound at c.0.5m Unremarkable example of species	C12	2.1
248	Sycamore	2*160	12	2.25	2.25	2	3.5		1.5	1.5	Semi Mature	Average	Poor	Situated within roadside grass verge Multiple unsympathetic limb removals to east canopy Unsympathetic flail management to lower west canopy Above average epicormic growth Bifurcates from c.0.5m, union included Unremarkable example of species	C12	2.7
249	Sycamore	130	10	1	2.75	2	3		0.5	0.5	Semi Mature	Average	Indifferent	Situated within roadside grass verge Multiple unsympathetic limb removals to east canopy Unsympathetic flail management to lower west canopy Above average epicormic growth Readily replaceable at current size Unremarkable example of species	C12	1.5

Tree Number	Common Species Name	Trunk Diameter (mm)	Height (m)	Crown Spread (m)					First Significant Branch (m)	Crown Clearance (m)	Life Stage	Physiological Condition	Structural Condition	Comments	BS5837 Category	RPA Radius (m)
				N	E	S	W	Radial								
250	Sycamore	220 230	13	2.5	2.25	3.25	5		1.75	1.75	Early Mature	Below Average	Indifferent	Situated within roadside grass verge Multiple unsympathetic limb removals to east canopy Unsympathetic flail management to lower west canopy Above average epicormic growth Sparse canopy at time of survey Above average internal deadwood Unremarkable example of species	C12	3.9*
251	Sycamore	300	12	4	2.75	1	4.25		1.5	1.5	Early Mature	Average	Indifferent	Situated within roadside grass verge Multiple unsympathetic limb removals to east canopy Unsympathetic flail management to lower west canopy Above average epicormic growth Unremarkable example of species	C12	3.6
252	Sycamore	230 170 220	14	4	3.75	3.25	4.5		2	2	Early Mature	Average	Poor	Situated within roadside grass verge Multiple unsympathetic limb removals to east canopy Unsympathetic flail management to lower west canopy Above average epicormic growth Multi stemmed from c.0.5m, union included Unremarkable example of species	C12	4.2
253	Sycamore	230	9.5	2.5	2.75	3	3.5		2	1.5	Semi Mature	Average	Indifferent	Situated within roadside grass verge Multiple unsympathetic limb removals to east canopy Unsympathetic flail management to lower west canopy Above average epicormic growth Unremarkable example of species	C12	2.7
254	Sycamore	140 130	8	1.75	2.75	2	4.25		1.75	1.75	Semi Mature	Average	Indifferent	Situated within roadside grass verge Multiple unsympathetic limb removals to east canopy Unsympathetic flail management to lower west canopy Above average epicormic growth Bifurcates from ground level, union included Unremarkable example of species	C12	2.4
255	Sycamore	180 200 120	9	4	3.25	2.25	5.25		2	2.25	Semi Mature	Average	Indifferent	Situated within roadside grass verge Multiple unsympathetic limb removals to east canopy Unsympathetic flail management to lower west canopy Above average epicormic growth Multi stemmed from c.0.5m, union appears sound Unremarkable example of species	C12	3.6
256	Sycamore	260	8	4	3.5	4.5	4		1	1	Semi Mature	Average	Indifferent	Situated within roadside grass verge Multiple unsympathetic limb removals to east canopy Unsympathetic flail management to lower west canopy Above average epicormic growth Unremarkable example of species	C12	3
257	Sycamore	290	7.5	3.5	2.75	3	3.75		0.5	1.5	Semi Mature	Average	Indifferent	Situated within roadside grass verge Multiple unsympathetic limb removals to east canopy Unsympathetic flail management to lower west canopy Above average epicormic growth Unremarkable example of species	C12	3.6

Tree Number	Common Species Name	Trunk Diameter (mm)	Height (m)	Crown Spread (m)					First Significant Branch (m)	Crown Clearance (m)	Life Stage	Physiological Condition	Structural Condition	Comments	BS5837 Category	RPA Radius (m)
				N	E	S	W	Radial								
258	Sycamore	240	6.5	3	3	3.25	2.75		0.5	1.5	Semi Mature	Average	Indifferent	Situated within roadside grass verge Multiple unsympathetic limb removals to east canopy Unsympathetic flail management to lower west canopy Above average epicormic growth Unremarkable example of species	C12	3
259	Sycamore	290	8.5	3.5	3.75	2.75	4.25		1	1.5	Semi Mature	Average	Indifferent	Situated within roadside grass verge Multiple unsympathetic limb removals to east canopy Unsympathetic flail management to lower west canopy Above average epicormic growth Unremarkable example of species	C12	3.6
260	Sycamore	270 150 145 120	10	3.25	4	3.25	5.5		1	1.75	Early Mature	Average	Poor	Situated within roadside grass verge Multiple unsympathetic limb removals to east canopy Unsympathetic flail management to lower west canopy Above average epicormic growth Multi stemmed from ground level, unions included Unremarkable example of species	C12	4.2
261	Sycamore	320	9.5	5	3	2	4.75		0.5	0.5	Early Mature	Average	Indifferent	Situated within roadside grass verge Multiple unsympathetic limb removals to east canopy Unsympathetic flail management to lower west canopy Above average epicormic growth Unremarkable example of species	C12	3.9
262	Cherry Plum	470 at 0.5m	9.5	5	5.25	4.75	4		1.25	0.5	Mature	Average	Poor	Established within field boundary Multi stemmed from c.1m, unions included Average internal deadwood Minor epicormic growth Unremarkable example of species	C12	5.7
263	Ash	200	7	1.75	2.75	3	1.75		1.5	1.5	Semi Mature	Below Average	Poor	Situated within roadside grass verge Stem tight and fused with T264 Readily replaceable at current size Considered to be of low arboricultural value	C12	2.4
264	Rowan	170	5	2.25	2.5	2.5	2		1.5	1.75	Semi Mature	Dead	Hazardous	Standing deadwood	U	N/A
265	Norway Maple	340	11.5	3	5.25	4	5		2.25	1.75	Early Mature	Average	Indifferent	Situated within grass verge to entrance of sites main access track Structure typical for species within current context Average internal deadwood Unremarkable example of species	C1	4.2
266	Sycamore	270 230	12.5	3.25	5.25	4	4.25		1.5	1	Early Mature	Average	Indifferent	Situated within grass verge to entrance of sites main access track Structure typical for species within current context Bifurcates from c.1m, union appears included Unremarkable example of species	C1	4.2
267	Norway Maple	370	11	3.25	5.5	3.25	4.5		2	1	Early Mature	Average	Indifferent	Situated within grass verge to entrance of sites main access track Structure typical for species within current context Minor basal epicormic growth Unremarkable example of species	C1	4.2

Tree Number	Common Species Name	Trunk Diameter (mm)	Height (m)	Crown Spread (m)					First Significant Branch (m)	Crown Clearance (m)	Life Stage	Physiological Condition	Structural Condition	Comments	BS5837 Category	RPA Radius (m)
				N	E	S	W	Radial								
268	Alder	120 60	5.5					2	0.5	1	Semi Mature	Below Average	Poor	Bifurcates from ground level, unions tight and included Dieback throughout crown Considered to be in a state of terminal decline	U	N/A
269	Alder	550 oi	8.5	3.25	3.5	3.25	3.25		1.75	0.5	Early Mature	Below Average	Indifferent	Clad and obscured by Ivy, unable to thoroughly inspect Above average epicormic growth Sparse canopy at time of survey Squat canopy form Unremarkable example of species	C12	6.6
270	Holly	3*120#	5.5					2.5	0.5	0.5	Semi Mature	Average	Indifferent	Multi stemmed from ground level, unions included Stems inaccessible due to dense lower crown Unremarkable example of species	C12	2.4
271	Ash	340 530	15.5	5.75	5.25	6	5 #		1.5	1	Early Mature	Below Average	Poor	Co-dominant stems from c. 0.5m, union to south is fused to c. 2.5m with significant lobed reaction growth Above average epicormic growth Considered to be of low arboricultural quality	C12	7.5
272	English Oak	115	5.5					2.25	0.5	1	Semi Mature	Average	Indifferent	Self-set specimen Readily replaceable at current size Considered to be of low arboricultural value	C12	1.5
277	Atlas Cedar	430#	14					6.75	0.5 #	1 to south	Early Mature	Average	Indifferent	Inaccessible, offsite within neighbouring residential land Cohesive with Cypress belt Structure appears typical for species within current context Moderate example of species	B1	5.1
278	Goat Willow	2*400 280 #	6	5 #	9	6.25	11		0.5	0.5	Mature	Below Average	Hazardous	Inaccessible, offsite within neighbouring residential land Partially collapsed co-dominant stem to south Heavily reduced near access road Hazardous structural condition	U	N/A
279	Horse Chestnut	340#	11.5					5.25	1.75	0.5	Early Mature	Average	Indifferent	Inaccessible, offsite within neighbouring residential land Component of linear planted belt Overhangs primary access road Unsympathetic flail management to lower canopy over access road Unremarkable example of species	C12	4.2
280	Horse Chestnut											Previously removed				
281	Horse Chestnut	280#	8					4	1.75	0.5	Early Mature	Below Average	Poor	In a state of terminal decline, unlikely to offer a long-term future contribution	U	N/A
282	Horse Chestnut	250#	7					2.5	2.5	1	Semi Mature	Average	Indifferent	Inaccessible, offsite within neighbouring residential land Component of linear planted belt Overhangs primary access road Clad and obscured by Ivy, unable to thoroughly inspect Unsympathetic flail management to lower canopy over access road Unremarkable example of species	C12	3

Tree Number	Common Species Name	Trunk Diameter (mm)	Height (m)	Crown Spread (m)					First Significant Branch (m)	Crown Clearance (m)	Life Stage	Physiological Condition	Structural Condition	Comments	BS5837 Category	RPA Radius (m)
				N	E	S	W	Radial								
283	Horse Chestnut	275#	7					2.5	2	1.5	Early Mature	Below Average	Poor	Dieback to leader Bark delamination and extensive bacterial staining Above average internal deadwood Considered to be in a state of terminal decline	U	N/A
284	Horse Chestnut	400#	9					4	2	1	Early Mature	Average	Indifferent	Inaccessible, offsite within neighbouring residential land Component of linear planted belt Overhangs primary access road Clad and obscured by Ivy, unable to thoroughly inspect Unsympathetic flail management to lower canopy over access road Unremarkable example of species	C12	4.8
285	Horse Chestnut	240#	5.5					2.75	1.75	1	Semi Mature	Average	Indifferent	Inaccessible, offsite within neighbouring residential land Component of linear planted belt Overhangs primary access road Clad and obscured by Ivy, unable to thoroughly inspect Unsympathetic flail management to lower canopy over access road Unremarkable example of species	C12	3
286	Horse Chestnut	300#	7.5					2.75	1.75	1.5	Early Mature	Below Average	Poor	In a state of terminal decline, unlikely to offer a long-term future contribution	U	N/A
287	Horse Chestnut	300#	8.5					2.5	1.75	2	Early Mature	Average	Indifferent	Inaccessible, offsite within neighbouring residential land Component of linear planted belt Overhangs primary access road Clad and obscured by Ivy, unable to thoroughly inspect Unsympathetic flail management to lower canopy over access road Unremarkable example of species	C12	3.6
288	Horse Chestnut	425#	12					5	1.75	0.5	Early Mature	Average	Indifferent	Inaccessible, offsite within neighbouring residential land Component of linear planted belt Overhangs primary access road Partially clad in Ivy Unsympathetic flail management to lower canopy over access road Unremarkable example of species	C12	5.1
289	Horse Chestnut	280#	8					3.75	1.5	0.5	Early Mature	Average	Indifferent	Inaccessible, offsite within neighbouring residential land Component of linear planted belt Overhangs primary access road Partially clad in Ivy Unsympathetic flail management to lower canopy over access road Unremarkable example of species	C12	3.3
290	Horse Chestnut	350#	9					4	1.5	1	Early Mature	Average	Indifferent	Inaccessible, offsite within neighbouring residential land Component of linear planted belt Overhangs primary access road Partially clad in Ivy Unsympathetic flail management to lower canopy over access road Unremarkable example of species	C12	4.2

Tree Number	Common Species Name	Trunk Diameter (mm)	Height (m)	Crown Spread (m) N	E	S	W	Radial	First Significant Branch (m)	Crown Clearance (m)	Life Stage	Physiological Condition	Structural Condition	Comments	BS5837 Category	RPA Radius (m)
G15	Crack Willow Alder English Oak Ash Beech Blackthorn Cherry Plum Field Maple Elm Hazel	200 max 90 av	12 max 6 av					5 max	0.5 av	0.5 av	Young to Semi Mature	Average	Indifferent	Understory scrub group, situated on embankment of pond feature Predominantly readily replaceable at current size Considered to be of low arboricultural value	C12	2.4 max 1.2 av
G16	Hawthorn Elm Elder Field Maple Alder Hazel English Oak Goat Willow Weeping Willow Norway Spruce	220 2*170 max	14 max 8 av					4 av	0.5 to 2	0.5 to 4	Young to Early Mature	Below Average to Average	Poor to Indifferent	Understory group for T178 - T204 Provides partial screen of dwellings to west Unremarkable collection	C12	3.9
G17	Blackthorn Field Maple Hawthorn	220 3*90 max	8 max 4 av					3.5 av	0.5 av	0.5 av	Young to Early Mature	Below Average to Average	Poor to Indifferent	Boundary group, comprised of unmanaged hedgerow components and colonising scrub Water course to west of collection Considered to be of low arboricultural quality	C12	3.3
G18	Blackthorn Hawthorn Hazel English Oak	5*70 av	4 av					3 av	0.5 av	0.5 av	Semi Mature	Average	Indifferent	Intermittent boundary collection of unmanaged scrub and self-set specimens Partially clad and obscured by Bramble Readily replaceable at current size Considered to be of low arboricultural value	C12	1.8
G19	Elm Hazel Elder Hawthorn Holly Field Maple Ash	260 130 max 100 av	10 max 5 av					3 av	0.5 av	0.5 av	Young to Semi Mature	Below Average to Average	Poor to Indifferent	Unmanaged intermittent understory boundary collection Partially clad and obscured by Bramble Unremarkable collection	C12	3.6 max 1.2 av
G20	Hawthorn Blackthorn Field Maple Plum Hazel	150 110 2*100 max	6 av					4 av	0.5 av	0.5 av	Young to Semi Mature	Average	Indifferent	Unmanaged internal field boundary scrub group Predominantly clad and obscured by Bramble Unremarkable collection	C12	2.7
G22	Blackthorn	2*100# max 50# av	6 max						0.5 av	0.5 av	Semi Mature to Early Mature	Average	Indifferent	Partially managed scrub group Maintained on sides along access track only Considered to be of low arboricultural quality	C12	1.8 max 0.9 av
G23	Ash Aspen Cherry	150# av	13 max					5 max	0.5 to 2	0.5 to 2	Semi Mature to Early Mature	Average	Indifferent	Offsite collection majoring on scrub and self-set specimens Clad and obscured by Bramble Readily replaceable at current size Considered to be of low arboricultural value	C12	1.8

Tree Number	Common Species Name	Trunk Diameter (mm)	Height (m)	Crown Spread (m)					First Significant Branch (m)	Crown Clearance (m)	Life Stage	Physiological Condition	Structural Condition	Comments	BS5837 Category	RPA Radius (m)
				N	E	S	W	Radial								
G24	Lawson Cypress Leyland Cypress	300# max	14 av					4 # av	0.5 av	0.5 av	Early Mature	Average	Indifferent	Offsite linear planted group along boundary of neighbouring residential land Structures appear typical for species within current context Provides screen of adjacent road Unremarkable collection	C12	3.6
G25	Cherry Holly Ash English Oak Cherry Plum Blackthorn	300# max	9 max					4 # max	0.5 to 2 #	0.5 to 2 #	Young to Early Mature	Average	Indifferent	Offsite collection defines boundary with neighbouring residential land Screens dwelling within views from south Unremarkable collection	C12	3.6
G26	Cherry English Oak Hazel Hawthorn Blackthorn Alder Holly	80# max	5 max					1.5 max	0.5 av	0.5 av	Young	Average	Indifferent	Establishing highways buffer plantings Readily replaceable at current size Considered to be of low arboricultural value	C12	0.9
H2	Hawthorn Ash Blackthorn English Oak	100 av	4 to 7					3.5 av	0.5 av	0.5 av	Semi Mature to Early Mature	Average	Indifferent	Previously maintained field boundary hedgerow Provides screen of adjacent road	C12	1.2

APPENDIX D

BARRIER SPECIFICATIONS

Recommended Tree Protection Fencing Specification for this Development

(Source: BS 5837: 2012)

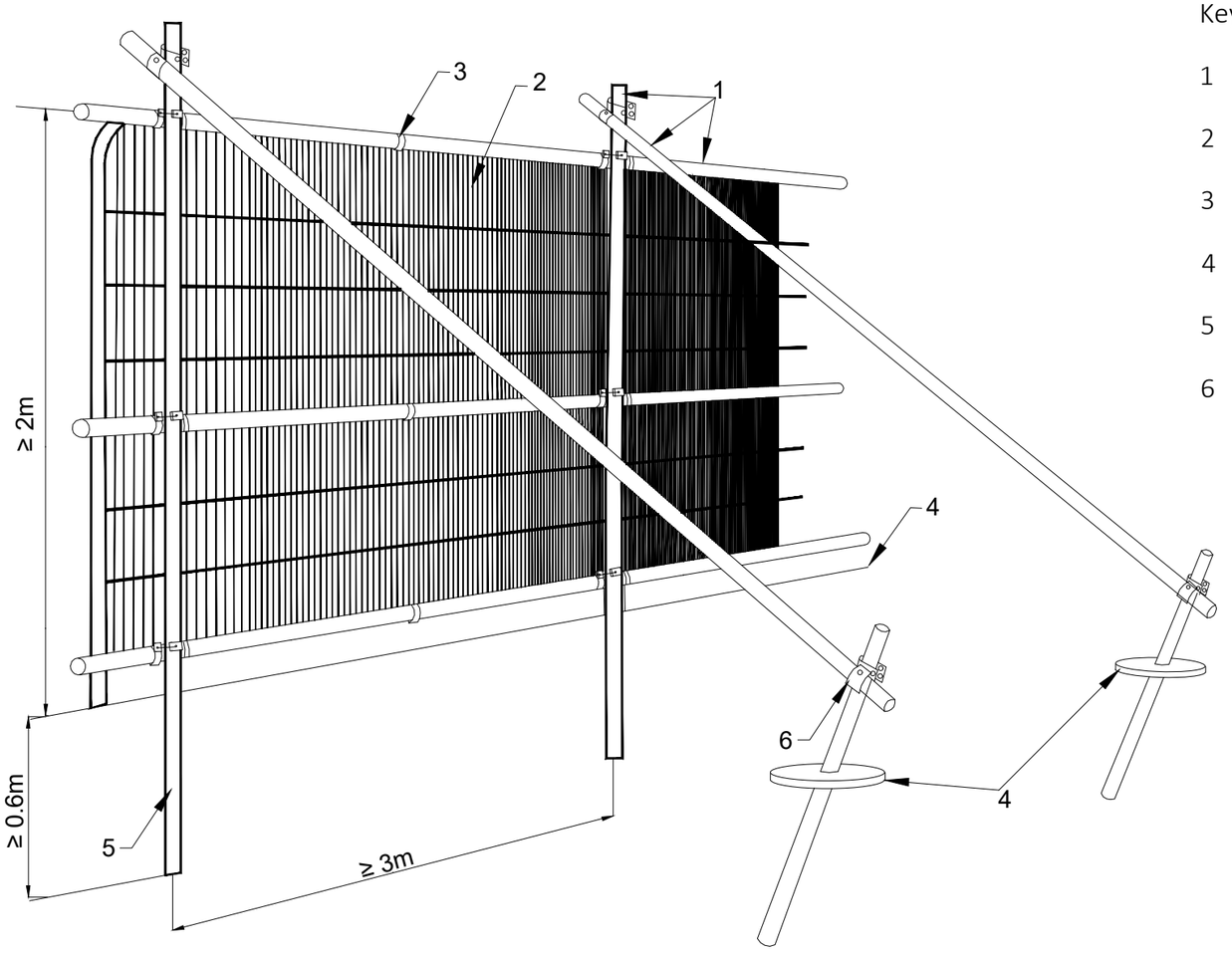

Key

1	Standard scaffold poles
2	Heavy gauge 2m tall galvanized tube and welded mesh infill panels
3	Panels secured to uprights and cross-members with wire ties
4	Ground level
5	Uprights driven into the ground until secure (minimum depth 0.6m)
6	Standard scaffold clamps

Notes:

- Supports are to be sited tree side of the panel front face.
- All weather notices should be attached to every fourth panel highlighting the importance of the barrier in its correct position. An example is provided overleaf which may be duplicated for use on this development.

aspect arboriculture

Tree Protection Barrier Specification

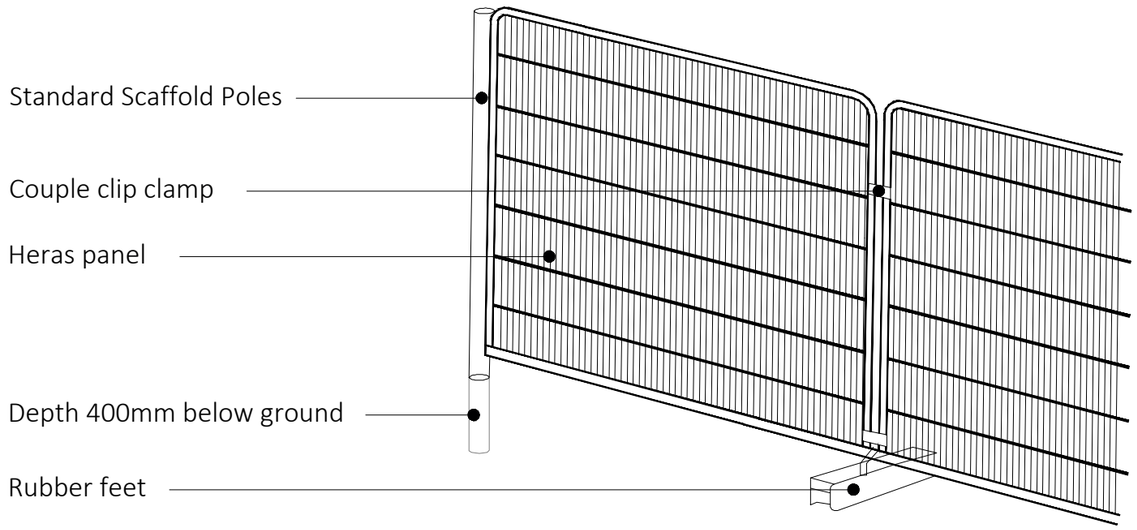

Heras panels supported with pinned rubber feet and driven scaffold pole on every second panel.

aspect arboriculture

aspect arboriculture

The Stables
Hardwick Business Park
Noral Way
Banbury
Oxfordshire OX16 2AF

T: 01295 585 600
E: info@aspect-arbor.com
W: www.aspect-arbor.com