Technical Note 1: Water Neutrality Statement

Site:	Dendrons, Kithurst Lane, Storrington
Prepared by:	Laura Jagiela
Approved by:	Neil Jaques
Date:	22 November 2024

motion
232 High Street
Guildford
Surrey
GU1 3JF

Tel: 01483 531000
http://www.motion-uk.co.uk

1.0 Introduction

1.1 Water Neutrality Statement (WNS) has been prepared on behalf of Mr. Christoper Hayhoe to demonstrate how the proposed development will achieve water neutrality.

1.2 Following the issue of Natural England's (NE's) Position Statement on Water Neutrality within the Sussex North Water Supply Zone (SNWSZ) it is understood that Horsham District Council (HDC) require all new and reserved matters planning applications to demonstrate that the development is water neutral. NE's Position Statement can be found in full within **Appendix A.**

1.3 The SNWSZ covers part of the Horsham District, as well as parts of the neighbouring Chichester, Arun and Crawley District. A plan showing the supply area can be found in **Appendix B**.

1.4 This statement sets out the following:

- Baseline calculations for the existing development;
- Additional demand as a result of the proposed development;
- Water reduction measures, such as water efficient fixtures and fittings and rainwater harvesting; and
- Measures to offset any remaining deficit following above.

2.0 Background

2.1 The proposed development is located at the end of Kithurst Lane in Storrington.

2.2 The existing site consists of vegetation and grass.

2.3 The proposal is for construction of a two-bedroom dwelling. A copy of the proposed plans can be found in **Appendix C**.

3.0 Baseline Calculations

3.1 The existing site does not have any existing water use. Therefore, no baseline data will be taken in the water neutrality calculations.

4.0 Additional Demand

4.1 The proposal is for the construction of a two-bedroom dwelling.

4.2 Census data has been used to estimate the average number of people in the home, which is 1.88 for a two-bedroom home.

4.3 A water calculation in accordance with Building Regulations Part G has been carried out and confirms that the proposed two-bedroom development will achieve a water consumption of 84.45 litres per person per day, which includes an allowance of 5 litres per person per day for external water usage. A copy of the Part G calculation can be found in **Appendix D** and is summarised in Table 4.1, below:

	Total Water Usage (l/p/day)	Mains Water Usage (l/p/day)	RWH System Usage (l/p/day)
WC (full flush)	5.84		5.84
WC (part flush)	5.92		5.92
Taps (Excluding Kitchen)	5.85	5.85	
Shower	26.22	26.22	
Bath	14.30	14.30	
Kitchen Taps	12.12	12.12	
Washing Machine	13.50		13.50
Dishwasher	3.56	3.56	
Total	87.31	62.05	25.26
Normalisation Factor	0.91	0.91	0.91
Total	79.45	56.46	22.99
External Water Use	5		5
Total	84.45	56.46	27.99

Table 4.1 – Water Usage

4.4 A copy of the proposed fixtures and fittings to achieve the above water consumption can be found in **Appendix E**.

4.5 Using the Part G water consumption figure of 84.45 litres per person per day and a population size of 1.88 it is estimated that the water usage per day for the proposed development is 158.77 litres per day.

4.6 Therefore, following the construction of the proposed development there will be an increase in water demand of 158.77 litres per day, which is greater than the baseline water usage of zero. At this stage, the proposed development cannot be considered to be water neutral.

4.7 Therefore, to achieve water neutrality, it is necessary to reduce mains water consumption further through rainwater harvesting and recycling, which is discussed further in section 5 below.

5.0 Water Reduction Measures

5.1 To help mitigate the increase in water demand it is proposed to incorporate rainwater harvesting to the proposed development.

5.2 The water collected by the rainwater harvesting system will be utilised for flushing toilets, in the washing machine, and all other uses will be mains water fed.

5.3 Noting these water uses, Table 4.1 above confirms that 27.99 litres per person per day can be supplied by the rainwater harvesting system, which equates to 52.62 litres per day, based on a population of 1.88 people.

5.4 The size of the rainwater harvesting tanks for the proposed dwelling has been calculated as per the guidance set out in BS EN 16941-1:2018 and will be large enough to store 9.6% of the Annual Water Demand. This will ensure that the tank will provide at least 35 days of storage for periods of drought, as required by HDC.

5.5 It is undetermined what the material of the roof of the proposed building will be and therefore a conservative yield coefficient of 0.8 has been used in the calculations.

5.6 The calculations confirm that the yield is sufficient enough to meet demand. Calculations used the annual rainfall data from the nearest MET Office climate station to the proposed site, which is North Heath. The calculations are summarised in Table 5.1 below and can be found in full in **Appendix F**.

Unit	Number of Persons	Roof Area	9.6% Annual Rainwater Yield (litres)	9.6% Annual Water Demand (litres)	Tank Size (litres)
2-bed proposed	1.88	83.3	4,944	1,844	2,600

Table 5.1 – Rainwater Harvesting Sizing Calculation

5.7 A typical layout and specification for a rainwater harvesting system is shown in **Appendix G**. The illustration shows how the rainwater will be collected, filtered and then returned to the property for re-use.

5.8 The dimensions of the proposed tanks can be found in **Appendix H**.

5.9 A Management and Maintenance Plan has been prepared for the rainwater harvesting system and can be found in **Appendix I**.

5.10 Once rainwater harvesting has been incorporated into the proposed dwelling the mains water usage will be reduced to 56.46 litres per person per day, which equates to 106.15 litres per day, based on an occupancy of 1.88 people. A mains water demand of 106.15 litres per day is more than the baseline water usage and therefore further offsetting is required.

6.0 Offsetting Measures

6.1 To ensure the development can demonstrate water neutrality in accordance with the NE Position Statement 106.15 litres per day will need to be offset.

Offsetting Scheme at The South Lodge Hotel

6.2 The client is proposing to offset the development against an offsetting scheme at The South Lodge Hotel, Brighton Road, Lower Beeding, Horsham, RH13 6PS. The full details of the mains water offsetting scheme at The South Lodge Hotel as it currently stands can be seen in **Appendix J** of this report, but is summarised below.

6.3 The site is a luxury hotel and spa with water currently supplied from three mains supplies, the Main Hotel Area (Meter Number: 11M50090), The Spa Area (Meter Number: 17MS000318) and the Gatehouse Area (Meter Number: 11AC001166).

Start Date	22/08/2022
End Date	16/08/2023
Start Sub-Meter Read	163,810
End Sub-Meter Read	179,340
Total Days	359
Total Water Consumption (m3)	15,530
Total Water Consumption (litres)	15,530,000
Water Consumption (litres per day)	43,259

Table 6.1: Existing Water Use at The South Lodge Hotel from Southern Water Meter 11M50090

Start Date	22/08/2022
End Date	16/08/2023
Start Sub-Meter Read	5,920
End Sub-Meter Read	8,572
Total Days	359
Total Water Consumption (m3)	2,652
Total Water Consumption (litres)	2,652,000
Water Consumption (litres per day)	7,387

Table 6.2: Existing Water Use at The South Lodge Hotel from Southern Water Meter 17MS000318

Start Date	13/06/2022
End Date	16/08/2023
Start Sub-Meter Read	9,184
End Sub-Meter Read	10,054
Total Days	429
Total Water Consumption (m3)	870
Total Water Consumption (litres)	870,000
Water Consumption (litres per day)	2,028

Table 6.3: Existing Water Use at The South Lodge Hotel from Southern Water Meter 11AC001166

6.4 Overall, The South Lodge Hotel has an existing water usage of 43,259 litres per day at the Main Hotel Area, 7,387 litres per day at The Spa Area and 2,028 litres per day at the Gatehouse Area. This gives a total water consumption across the site of 52,674 litres per day, equivalent to 52,674 water credits.

6.5 The metered water supply at the Main Hotel Area provides water for the following:

- Staff and guest toilet and washing facilities
- Cleaning and laundry
- Kitchens and bars
- Garden irrigation

6.6 The metered water supply at The Spa Area provides water for the following:

- Staff and guest toilet and washing facilities
- Cleaning
- Pools and spas
- Kitchen
- Garden irrigation

6.7 The metered water supply at The Gatehouse Area provides water for the following:

- Staff toilet and washing facilities
- Cleaning and laundry
- Kitchens

- Garden irrigation

6.8 Two boreholes were drilled on site between the 11th and 22nd April 2024. They were both drilled to a depth of 62m and into the Upper Tunbridge Wells Sand Formation. They have been labelled BH1 and BH2 for all reports.

6.9 BH1 has been tested and can achieve an average rate of 20.8m^3/day, 20,800 litres per day. A EA licence has been applied for but at this stage BH1 has only been tested for the purpose of an unlicenced supply (<20m^3). It is proposed to abstract 19.999m^3/day, 19,999 litres per day.

6.10 At this stage BH2 has not been yield tested as it is not required for Stage 1. Testing of BH2 will take place during the EA abstraction licence application process. It is not needed to provide the 19.999 m^3/day for the Stage 1 of the offsetting scheme.

6.11 Stage 1 of the offsetting scheme will provide 19.999m^3/day for potable use within the Main Hotel Area. This will reduce the demand with the SNWSZ. A batch meter will ensure the BH1 will not abstract more than the limit of an unlicensed supply.

6.12 BH1 is not currently up to potable water standard and therefore, the offsetting scheme will install a new treatment plant so that it can provide a potable supply. This will include:

- Removing the existing storage tank and redundant structures;
- Installation of appropriate potable water aeration & storage tanks, pumps, filtration, and treatment systems in a self-contained ISO container;
- Water treatment design and quality testing to WHO standards and/or the standards set by the local authority's Environmental Health Officer (EHO);
- Water quality testing and Environmental Health Officer (EHO) approval;
- Connection of the treated water supply from the new storage tank to the Main Hotel Area supply using the existing distribution pipe, and;
- Installation of a new telematics system to remotely monitor the borehole and record the amount of water supplied 24/7.

6.13 The main water supply will continue to provide water to the Main Hotel Area for the demand above the 19.999m^3/day. This will be done via an air separated feed (to comply with water regulations and ensure no water is fed back into the mains supply network) into the new storage tank. The main water supply will only kick in when the water levels in the storage tank drop below a certain point and the 19.999m^3/day has be abstracted from BH1.

Offsetting of the Proposed Development

6.14 The borehole abstraction at The South Lodge Hotel, during stage 1, is making 19,999 litres per day available or offsetting mains water demand, which equates to 19,999 credits.

6.15 As stated in Section 5 of this WNS, the proposed development will have a total mains water demand of 106.15 litres per day and therefore require a minimum of 107 credits for the development to be water neutral.

7.0 Summary and Conclusions

7.1 This Technical Note provides a water neutrality calculation for Dendrons, Kithurst Lane, demonstrating proposed water demand produced by the additional fixtures and a mitigation strategy which neutralises any increase in water use.

7.2 The proposed development at Dendrons will purchase and be allocated 107 credits as part of the significant mains water offsetting scheme at The South Lodge Hotel. Therefore, the residual mains water requirement of

the development of 106.15 litres per day has been fully offset and there is no additional; mains water requirements within the SNWSZ as a result of the development.

7.3 In conclusion, the development at Dendrons, Kithurst Lane will be water neutral within the SNWSZ and Water Neutrality cannot be an impediment to the progress of this application, as it is using an offsetting scheme approved by and with a precedent set by Natural England.

Appendix A

Natural England's Position Statement

Natural England's Position Statement for Applications within the Sussex North Water Supply Zone

September 2021 – Interim Approach

Please take the following as Natural England's substantive advice for all applications which fall within Sussex North's Water Supply Zone.

Sussex North Water Supply Zone

Arun Valley SPA, SAC and Ramsar Site- Sussex North Water Supply Zone

The Sussex North Water Supply Zone includes supplies from a groundwater abstraction which cannot, with certainty, conclude no adverse effect on the integrity of;

- Arun Valley Special Area Conservation (SAC)
- Arun Valley Special Protection Area (SPA)
- Arun Valley Ramsar Site.

As it cannot be concluded that the existing abstraction within Sussex North Water Supply Zone is not having an impact on the Arun Valley site, we advise that developments within this zone must not add to this impact. This is required by recent caselaw, Case C-323/17 People over wind and Sweetman. Ruling of CJEU (often referred to as sweetman II) and Coöperatie Mobilisation for the Environment and Vereniging Leefmilieu Case C-293/17 (often referred to as the Dutch Nitrogen cases).

Between them these cases require Plans and Projects affecting sites where an existing adverse effect is known (i.e. the site is failing its conservation objectives), to demonstrate certainty that they will not contribute further to the existing adverse effect or go through to the latter stages of the Regulations (no alternatives IROPI etc).

Developments within Sussex North must therefore must not add to this impact and one way of achieving this is to demonstrate water neutrality.

In addition, the Gatwick Sub regional Water Cycle Study concluded that water neutrality is required for Sussex North to enable sufficient water to be available to the region.

The definition of water neutrality is the use of water in the supply area before the development is the same or lower after the development is in place.

Strategic approach

Natural England has advised that this matter should be resolved in partnership through Local Plans across the affected authorities, where policy and assessment can be agreed and secured to ensure water use is offset for all new developments within Sussex North. To achieve this Natural England is working in partnership with all the relevant authorities to secure water neutrality collectively through a water neutrality strategy.

Whilst the strategy is evolving, Natural England advises that decisions on planning applications should await its completion. However, if there are applications which a planning authority deems critical to proceed in the absence of the strategy, then Natural England advises that any application needs to demonstrate water neutrality. We have provided the following agreed interim approach for demonstrating water neutrality;

Minimising water use of new builds.

- Complete a water budget (based on occupancy)
- All new builds to demonstrate that they can achieve strict water targets (e.g., 85L/pp/day*)

  This can be achieved by measures such as:

- Grey water recycling (advantage of being reliable in hot dry weather);
- Rainwater harvesting;
- Water efficient fixings (such as shower aerators) to demonstrably reduce demand-this would need to be suitably certain.

In addition, water offsetting is required

- One way to achieve this is retrofitting of council owned properties/commercial buildings-located within Sussex North. Examples include:

- Grey water recycling- (for example there are clear opportunities for commercial properties).
- Rainwater harvesting of commercial settings;
- Installation of water reduction fittings in Council-owned buildings.

These measures need to be implemented until such time as a more sustainable water supply has been secured.

It will also need to be ensured that measures are not already proposed (for example in Southern Water's Management Plan) to avoid double-counting.

Any mitigation must be suitably certain in order to comply with the Habitats Regulations and Caselaw.

If the application cannot demonstrate, through an appropriate assessment, the required water neutrality, we advise that it is either revised to achieve this in line with the above or awaits completion of the strategic approach.

The securing of water neutrality is a matter which needs to be resolved at a strategic level and Natural England is working with the relevant authorities and the water company to achieve this. In light of this, Natural England will not be engaging with individual planning applications whilst the strategy is evolving.

***This this is the reasonably achievable figure with the above measures based on the early data from the strategic solution and may be subject to change as the strategic solution evolves.**

Appendix B

Sussex North Water Supply Zone

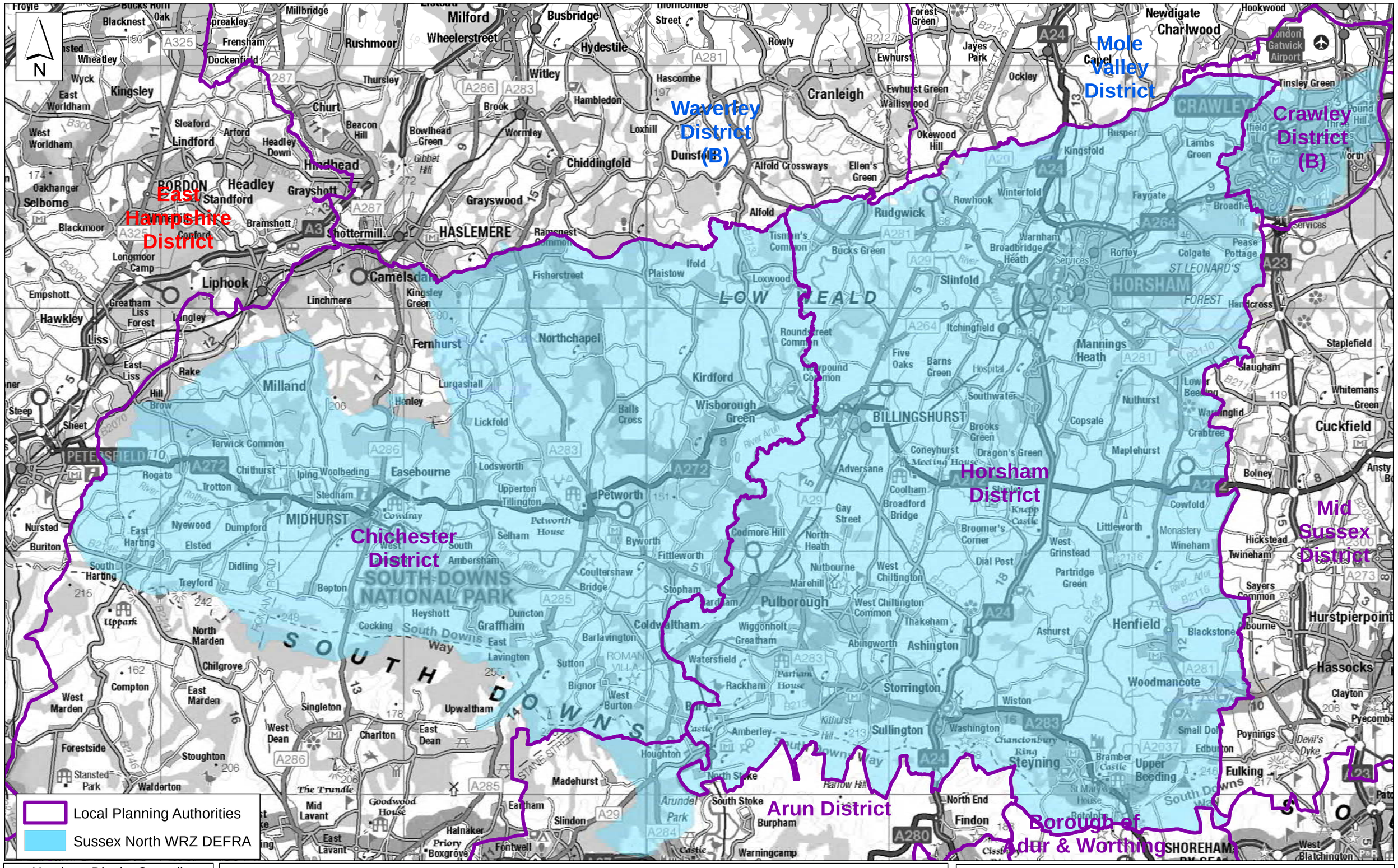

Horsham District Council

Parkside, Chart Way, Horsham
West Sussex RH12 1RL.
Barbara Childs : Director of Place

Reproduced by permission of Ordnance Survey map on behalf of HMSO. © Crown copyright and database rights (2021). Ordnance Survey Licence.100023865

Sussex North Water Resource Zone

Chichester Horsham Crawley

Reference No :		Date : 23 November 2021	Scale : 1:3,000 at A2
Drawing No:	Drawn :	Checked :	Revisions :

Appendix C

Proposed Site Plans



Proposed Site Plan - 1:500

metres 10 20 30 40 50

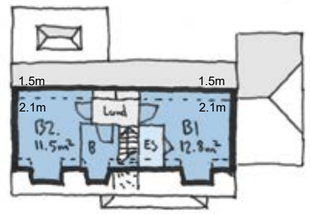

First Floor Plan
1:200

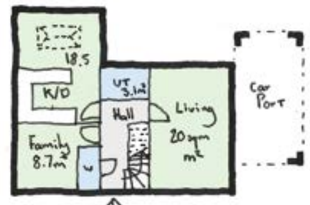

2 Bedroom 4 Person Chalet House
c.99sqm

Ground Floor Plan
1:200

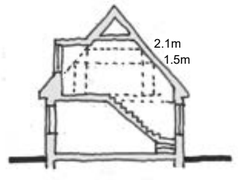

Typical Section
1:200

metres 4 8 12

REV	DATE	DETAILS	DR	CH
A	09.01.24	Site boundary adjusted		

GreenJay Architecture

CLIENT'S NAME
Mr. Heyhoe

JOB TITLE
Dendrons, Kithurst Lane, Storrington

DRAWING TITLE
Proposed Site & Floor Plans

SCALE
SCALE VARIES

DATE
MAY 22

JOB NO	DRAWING NO	REV
DREN	01	A

STATUS
APPROVAL

CAD Plot date: 9/01/2024 - 13:15:51 dren - site layout.dwg

Appendix D

Proposed Part G Calculation

Proposed Part G - Water Usage

Fixture	Capacity/Flow Rate	Use Factor	Fixed Use	litres/person/ day
WC (Single Flush)		4.42		0.00
WC (Dual Flush)	4	1.46		5.84
WC (Dual Flush) Part	2	2.96		5.92
Taps (excluding kitchen)	2.7	1.58	1.58	5.85
Bath (where shower present)	130	0.11		14.30
Shower (where bath present)	6	4.37		26.22
Bath Only		0.5		0.00
Shower Only		5.6		0.00
Kitchen Sink	4	0.44	10.36	12.12
Washing Machine	6.43	2.1		13.50
Dishwasher	0.99	3.6		3.56
	Total calculated use (litres/person/day)			87.31
Normalisation Factor				0.91
Total Water Consumption (CSH) (litres/person/day)				79.45
External Water Use				5.00
Total Water Consumption (Part G) (litres/person/day)				84.45

Rainwater Harvesting	27.99	litres/person/day
Mains Water	56.46	litres/person/day
Total	84.45	litres/person/day

	Population	Mains Water Usage	Rainwater Usage	Total Water Usage
Proposed 2-bedroom	1.88	106.15	52.62	158.77
Totals	1.88	**106.15**	**52.62**	158.77

Appendix E

Fixtures and Fittings Specifications

Fixtures and Fittings - Part G Specifications

Item	Capacity/Flow rate	Overview
Toilet (Dual Flush)	4/2 litres	The Gap 
Basin Tap	2.7 litres/minute	Joseph Miles 
Bath	130 litres	Ideal Standard 
Shower	6 litres/minute	Triton 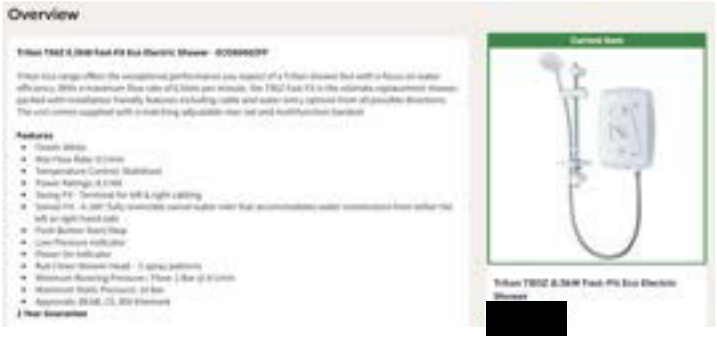

Kitchen Sink	4 litres/minute	Tap with flow regulator - Affinity by Moores  Flow Regulator: 

Appendix F

Rainwater Harvesting Calculations

Rainwater Harvesting System (BS EN 16941-1:2018 - Intermediate Approach)

AAR	858.7	Average Annual Rainfall
e	0.8	Yield Coefficient
h	0.9	Hydraulic Filter Efficiency
P_d	27.99	Daily Requirement per Person

Unit	Type	No. Beds	No. Units	Census	Population	Roof Area	9.6% Annual Rainwater Yield (litres)	9.6% Annual Water Demand (litres)	Tank Size (litres)
2-bedroom	House	2	1	1.88	1.88	83.3	4,944	1,844	2,600
		Totals	1		1.88		4,944.13	1,843.85	

Appendix G

Rainwater Harvesting System Specifications


HARVESTING RAINWATER
DIRECT-PRESSURE OPERATING PRINCIPLES
1 LEAF GUARDS
2 WATER FILTER
IN TELESCOPIC NECK
3 CALMED INLET
ON ENTERING TANK
4 RWH TANK
5 OVERFLOW
TO WASTE WHEN FULL
6 POWER SUPPLY
FOR ELECTRIC PUMP
7 ELECTRIC PUMP
SUPPLIES WATER TO SERVICES
8 MAINS WATER
9 TELESCOPIC NECK/LID
ACCESS WHEN NEEDED
10 MAINS WATER BACK-UP
FOR PROLONGED DRY SPELLS
11 FLOAT VALVE
ACTIVATES BACK-UP
12 STOPCOCK & PRESSURE GAUGE
BEFORE CONTINUING TO THE VARIOUS SERVICES

SDS

Water Infrastructure Systems

DIRECT PRESSURE SYSTEM HOME & GARDEN





Inside the Household

Top Up Controller

Automatic mains water top-up Controller kit for rainwater tanks with pump isolation and alarm. The system detects when the tank contents level is running low and initiates a mains top up procedure to ensure the tank never runs out of water supply.

SDS Ltd, Clearwater House, Castlemills, Bridgwater, Somerset, BS26 2RE
+44 (0)1934 751303
info@sdslimited.com

SDS
Water Infrastructure Systems

SYSTEM:

A Direct Pressure System is the most popular, cost effective and risk-free option for rainwater harvesting. It can be used for both garden and household applications, for example, it can be used in buildings with a small block of toilets, and for garden irrigation and machine washdowns. The system sends pressurised water straight from the external tank directly to the application. If the water level in the tank gets too low, the top up controller will activate a mains top up so the tank doesn't empty.

COMPONENTS

P Series pumps are stainless steel pumps with plastic coverings and are suitable for domestic water systems, rainwater harvesting, tanks, surface irrigation and tank transfer.

The rodent guard protects the internal water from rodents and large debris which could contaminate the water entering via the overflow.

The PF filter is designed with a level drop, this along with its very smooth surface structure allows excess dirt to be rinsed straight through to the overflow. The filter cartridge mesh is stainless steel within plastic housing and is self-cleaning, though regular inspection is recommended.

The calmed inlet removes the kinetic energy from the water as it enters the tank. This means that as the water enters it doesn't stir up the contents of the tank.

The turret set provides the connection between the pump and the pipework leading to the various external applications. They are made from a flexible plastic so can easily deal with the pressurised water coming from the pump.

The pump lifting chain aids in servicing the pump as it allows the pump to be easily pulled up towards the top of the tank.

A floating intake ensures that no water from either the bottom or the surface of the tank is taken in. Meaning only clean water passes through the system and is pumped into the household.

ADDITIONAL SPECIFICATIONS

- Service duct
- Delivery hose (Options available)
- Top up controller
- Tanks sold separately
- Extra overflow on tanks 5600 – 10000

POPULAR USE:

- Garden irrigation
- Cleaning the car
- Washing windows
- Power washing drive/patio
- Outside tap and hosepipe
- Flushing toilets
- Drinking water (if tank is potable)
- Washing machine





Appendix H

Rainwater Harvesting Tank Dimensions

SDS 2,600 Litre Rainwater Harvesting Tank



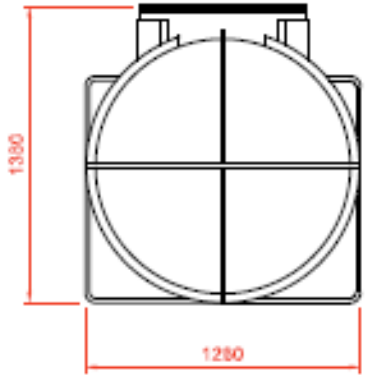

END ELEVATION

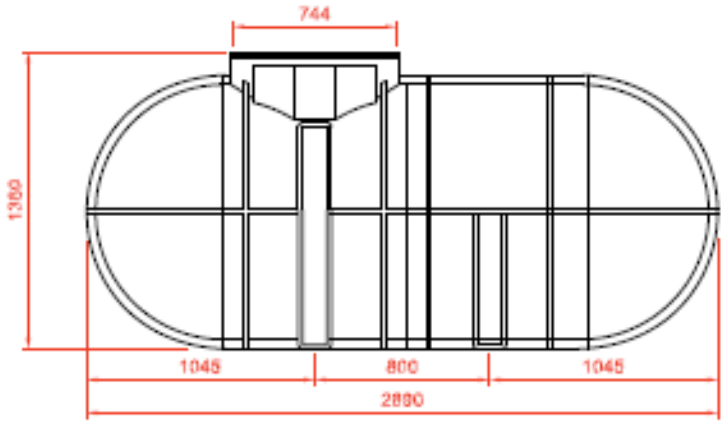

SIDE ELEVATION

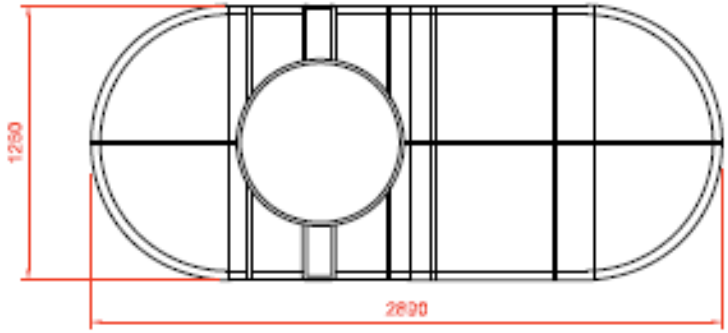

PLAN

Client	SDS	Details
Project Name	2,600 Litre Tank	
Type	Standard Detail	
Date	-	
Drawing no.	-	
Revision	A	

Notes:

This Drawing is to be read in conjunction with all relevant Architect, Engineers and Specialists drawings and specifications.

Do not scale from the drawing in either paper or digital form. Use written dimensions only.

SDS Water Infrastructure Systems

Appendix I

Rainwater Harvesting Management and Maintenance Plan

Dendrons, Kithurst Lane
Storrington, Pulborough

Rainwater Harvesting Management and Maintenance Plan

For

Mr. Christoper Hayhoe

motion

Document Control Sheet

Dendrons, Kithurst Lane

Storrington, Pulborough

Mr. Christoper Hayhoe

This document has been issued and amended as follows:

Date	Issue	Prepared by	Approved by
6th March 2024	FINAL	Laura Jagiela	Neil Jaques

Motion
84 North Street
Guildford
GU1 4AU
T 01483 531300
F 01483 531333
E info@motion.co.uk
W www.motion.co.uk

Contents

1.0 Introduction 1
2.0 Treatment 2
3.0 Continuity of Supply 3
4.0 Maintenance Categories 4
5.0 The Rainwater Harvesting System 5
6.0 General Maintenance Principles 6
7.0 Inspection and Maintenance Frequency of Components 7

1.0 Introduction

1.1 The report sets out the principles for the long-term management and maintenance of the rainwater harvesting systems at the proposed development.

1.2 The purpose of this report is to ensure that the client has a robust inspection and maintenance plan for the lifetime of the development. This will ensure the optimum operation of the rainwater harvesting systems and that they will be continually maintained. This will ensure that the proposed development will remain water neutral.

1.3 All those responsible for maintenance should follow relevant health and safety legislation for all activities listed within this report (including lone working, if relevant). Method statements and risk assessments should always be undertaken and made available, if requested.

1.4 This report has been produced by Motion to describe the typical management and maintenance tasks that are known at the design stage (such as maintenance frequencies and typical tasks). These have been drawn from industry guidance such as BS EN 16941-1:2018, The SuDS Manual (CIRIA 753) and the manufacturer's own guidance.

1.5 Maintenance is considered as a construction activity under the CDM Regulations 2015. Under the CDM Regulations, it is a requirement that a competent person be appointed to carry out a required role. CDM defines a competent person as an individual with sufficient knowledge of the specific tasks to be undertaken, as well as sufficient experience and ability to carry out their duties in relation to the task in a way that secures health and safety on site.

1.6 In recognition of the requirements of the CDM Regulations 2015, this rainwater harvesting management and maintenance plan expects that the maintenance work will be carried out by a competent person who must have prior knowledge of the rainwater harvesting systems onsite.

2.0 Treatment

2.1 The rainwater harvesting system shall incorporate suitable treatment in accordance with BS EN 16941-1:2018, to ensure that the water quality is suitable for its intended end use.

2.2 The treatment will cover the following:

- Removal of coarse particles, upstream of the storage;
- Retention of fine particles by sedimentation and flotation in the storage tank; and
- Filtration following the storage device, depending on the intended use.

2.3 Preliminary treatment will be provided in the form of filters and separators prior to to the storage tank. This will include leaf guards on gutters and a water filter. A first flush diverter will be included to divert particles contained in rainwater away from the tank and to a suitable drain. These measures will prevent coarse solids and organic matter from entering the storage tank.

2.4 Any fine particles will then be separated either by sedimentation by settling out to the bottom of the tank, or flotation to the water surface.

2.5 A calmed inlet will be incorporated in the tank to prevent turbation of the sediment at the bottom of the tank by the inflow of water. Removal of the sediment will be carried out in accordance with Table 5.1 below.

2.6 Removal of floating particles will occur when the tank overflows, or when it is cleaned out in accordance with Table 5.1 below.

2.7 Water will be extracted from the tank via a floating pump, which will extract water from level that is above any sediment collected at the bottom of the tank and below any floating particles. This will help maintain the quality of harvested rainwater that is to be used in the property.

2.8 Where the water is being used for laundry, it is understood that the Council require an additional level of treatment. Therefore, it is proposed that a UV filter will be incorporated in advance of the washing machine and this will kill any microorganisms, prior to it being used in the washing machine.

2.9 A schematic showing the layout of the equipment used in a rainwater harvesting system is shown in Figure B.2 of BS EN 16941-1:2018.

3.0 Continuity of Supply

3.1 To ensure that sufficient water is available for re-use, the storage tank will be sized so that it can provide 35 days of storage, which will provide sufficient supply during periods of drought.

3.2 Where drought periods extend beyond 35 days, the rainwater harvesting system will include an automatic mains backup. This will ensure that water is available at all times, even during extended periods of drought.

4.0 Maintenance Categories

4.1 There are three categories of maintenance activities referred to in this report. These are:

Inspection and Monitoring

- Inspection and monitoring tasks should be carried out frequently, nominally once a month, and should include a visual inspection of all components including all inlets and outlets.

Regular Maintenance (Monthly)

- Regular maintenance consists of basic tasks done on a frequent and predictable schedule.

Seasonal Maintenance (Quarterly)

- Seasonal maintenance comprises tasks that are likely to be required periodically, but on a much less frequent and predictable basis than the routine tasks.

Remedial Maintenance

- Remedial maintenance comprises of intermittent tasks that may be required to rectify faults associated with the system that have been identified through visual inspections. The likelihood of faults can be minimised by correct installation, regular inspection and timely maintenance.

5.0 The Rainwater Harvesting System

5.1 The proposed rainwater harvesting system will receive rainwater passing through and over several structures and will store rainwater within several items of infrastructure. These include:

- Roofs
- Gutters
- Filters;
- Pumps;
- Overflows; and
- Storage tanks.

5.2 All components should be installed in accordance with the manufacturer's instructions and to the levels/arrangements as defined on the designer's drawings.

5.3 This report should be read in conjunction with the design drawings of the drainage design system, so that the location and type of each feature can be recognised and understood.

5.4 Manufacturer's instructions are to be added to this document once specific products have been selected and installed as part of the detailed design. This document will subsequently form the basis for a maintenance regime for the rainwater harvesting systems.

6.0 General Maintenance Principles

6.1 All rainwater harvesting systems require regular maintenance to keep them working at optimum efficiency and capacity. The maintenance of the rainwater harvesting systems should be carried out alongside other regular maintenance tasks within the property.

6.2 Timely and adequate maintenance will increase the lifespan of the rainwater harvesting system. Inadequate maintenance will do the reverse.

6.3 The property owners are responsible for the monitoring and maintenance of the rainwater harvesting systems for the lifetime of the development.

7.0 Inspection and Maintenance Frequency of Components

7.1 Table 5.1 below lists each of the components used within the development's rainwater harvesting systems. It suggests an indicative maintenance frequency for each component and ascribes typical maintenance tasks to them.

7.2 It is understood that the system will be considered as a private water supply and, therefore, will be governed by the Private Water Supply Regulations 2016. These are regulated by the local council's Environmental Health Officer or Pollution Control Officer. However, the regulations in England and Wales do not require monitoring to be undertaken where the water supply is to a single domestic dwelling, unless the local authority is requested to do so by the owner or occupier of the dwelling, or if they are concerned that the supply presents a potential danger to human health.

7.3 In accordance with the Drinking Water Inspectorate's Private Water Supply regulations, it is the responsibility of the homeowner to ensure that all necessary maintenance activities are carried out in a timely manner and that the design performance of each drainage component is preserved. The homeowner may appoint a competent contractor to assist with the maintenance of their rainwater harvesting system. Additionally, the Council has a role to ensure the regulations are upheld by the homeowner.

7.4 If there is any uncertainty regarding the correct and safe methods of cleaning, or what equipment should be used, the manufacturer should be consulted.

Maintenance Schedule	Required Action	Frequency
Regular Maintenance	Inspection of the tank for debris and sediment build-up	Annually
	Inspection of inlets/outlets and withdrawal devices	Annually
	Inspection of filters	Annually
	Inspection of Pumps	Annually
	Inspection of overflow areas	Annually
	Inspection of gutters	Annually
	Cleaning of tank	Annually
	Cleaning of inlets and outlets and withdrawal devices	Annually
	Cleaning of gutters and roof drain filters	Annually
	Check pump operation	Annually
Occasional Maintenance	Cleaning and/or replacement of any filters	Quarterly
Remedial Actions	Repair of overflow erosion damage or damage to tank	As required
	Pump repairs	As required

Table 5.1 – Maintenance tasks and frequencies

7.5 Also, NA.1 in the BS EN 16941-1:2018 states that frequent testing should not normally be required for rainwater harvesting systems to ensure the water quality. It states that observations for water quality should be made during maintenance visits and testing should be carried out where the system is not operating satisfactorily. When sampling is required a sample should be taken and carried out in accordance with the guidance set out in NA.1 and Table NA.1 sets out the guideline values for bacteriological monitoring and Table NA.2 for non-bacteriological monitoring.

7.6 Upon completion of maintenance activities, a record should be kept of the work carried out. This should be retained and an annual maintenance report should be compiled, which should include the following:

- Observations resulting from inspections;
- Maintenance and operation activities undertaken during the year; and
- Recommendations for inspections and maintenance programmes for the following year.

7.7 On the next page is a table with suggested information that should be recorded and included with the maintenance plan. As mentioned in the introduction to this document, this should be a living document and regularly updated, as required and should be kept for the lifetime of the development.

Date	Component requiring maintenance	Issues prompting maintenance	Scheduled maintenance (Y/N)	Maintenance carried out	Additional works required (Y/N). If yes, please detail	Next scheduled date of inspection and maintenance

Appendix J

Summary of The South Lodge Hotel Scheme

WATER OFFSETTING SCHEME AT THE SOUTH LODGE HOTEL FOR DENDRONS, KITHURST LANE, STORRINGTON (MR CHRIS HAYHOE)

This statement has been prepared by Nicholls Countryside Construction Ltd who are providing a water offsetting scheme at The South Lodge Hotel, Brighton Road, Lower Beeding, Horsham RH13 6PS ("The Site"). The statement forms part of the Developer's Water Neutrality Statement and sets out the offsetting measures proposed in that statement. It provides the following details.

1. List of scheme participants at date of publication.
2. Description of the Site, actual meter readings and an assessment of existing consumption
3. Proposed offsetting scheme at the Site.
4. Hydrologist's assessment of the hydrogeology, impact on the protected areas, borehole design, yield, sustainability and water quality.
5. Implementation specifications, maintenance regime and water quality assurance.

This report replaces all previously issued reports.

DEVELOPER WATER CREDIT ALLOCATION

Mr Chris Hayhoe ("The Developer") is participating in the scheme alongside other developers and has been allocated 107 credits in the scheme based on their offsetting requirement for this application and or others. The water offsetting requirement for each application is set out in the relevant Water Neutrality Statement. One credit is equivalent to offsetting 1 litre of water per day. The table below lists the developers currently participating in this scheme and their allocation together with any planning reference to which the credits have been applied.

Developer	Planning Reference if Available	Credits
Croudace Homes Ltd	HDC - DC/21/0749	14,086
Garrison Properties (Southern) Ltd	HDC - DC/24/1413	216
Cygnature Homes Ltd	HDC - TBA	159
Michael Casey	HDC - DC/24/1409	315
David & Elizabeth King	HDC - TBA	254
Plaxtol Investments Ltd	HDC - DC/23/1685	328
Mr A & Mrs K Walls and Scorpio Property Ltd (Plot 1B)	HDC - DC/22/1594	246
Mr A & Mrs K Walls and Scorpio Property Ltd (Plot 5B)	HDC - DC/22/1711	228
Mr Chris Hayhoe	**HDC - DC/24/0104**	**107**
Cullum Capital Investments LLP	HDC - DC/24/0535	706
Philip and Eleanor Morris	HDC - DC/24/0489	186
William and Anita Eastwood	HDC - DC/23/1485	215
Adam Heslop and Susan Heslop	HDC - DC/24/0218	82
	TOTAL CREDITS IN SCHEME	19,999
	TOTAL CURRENTLY ALLOCATED	17,128
	REMAINING CREDITS (CURRENT SURPLUS)	2,871

OVERVIEW OF OFFSETTING PROPOSAL

The Site has an average daily water consumption in excess of 52m3/day and potentially over 70m3/day. The latter amount is still being assessed as discussed later in the document. Two boreholes have been drilled and yield tested and the supply aquifer is not connected to Hardham.

An EA licence is currently being applied for which, once approved, will allow the whole Site to be removed from the mains supply. The EA application process will take some time and in the meantime one of the boreholes will be used to supply an unlicenced supply (licence not required) of just under 20 m3/day to the Site and remove 19.999 m3/day from the mains supply making it available to offset demand for future housing development. This is Stage 1 of the offsetting scheme.

Stage 1 will provide all of the infrastructure for it and Stage 2 (the full offsetting scheme). Stage I will only turn on the supply to the Main Hotel Area, however all the necessary pipework will be laid to turn on the other Areas as soon as Stage 2 can be brought online.

This offsetting scheme described in this report has been **assessed by Natural England and approved under application DC/21/0749** (See Appendix J). Sufficient water credits have been sold to cover the cost of both stages.

OFFSETTING SITE DESCRIPTION

Existing Supply & Consumption

The Site is a luxury hotel and spa with water currently supplied from three existing mains supplies. There are two further metered supplies which are no longer in use. The hotel is located within the Sussex North Water Resource Zone (see location map in Appendix A) and all three supplies are metered mains supplies. Details of each supply points are provided in the table below.

Meter Number	Area Supplied		Usage litres/day
11M50090	Main Hotel Area		46.3
17MS000318	Spa Area		7.4
11AC001166	Gatehouse Area		2
		TOTAL	**52,674**

Actual meter readings were taken over a 12 month period within the last 3 years and these are detailed below with evidence of the meter readings provided in Appendix B.

Existing Water Consumption – Main Hotel Area		m3
Meter Number 11M50090		
	Actual Reading 22/08/2022	163,810
	Actual Reading 16/08/2023	179,340
	Number of days between readings	359
	Consumption in Period	15,530
	Average daily consumption	43.259

Existing Water Consumption – The Spa Area	m3
Meter Number 17MS000318	
Actual Reading 22/08/2022	5,920
Actual Reading 16/08/2023	8,572
Number of days between readings	359
Consumption in Period	2,652
Average daily consumption	7.387

Existing Water Consumption – Gatehouse Area	m3
Meter Number 11AC001166	
Actual Reading 13/06/2022	9,184
Actual Reading 16/08/2023	10,054
Number of days between readings	429
Consumption in Period	870
Average daily consumption	2.028
TOTAL Average Daily Consumption (all three supplies)	**52.674**

52.674 m3 per day equals 52,674 litres/day and converts to 52,674 water credits of which 19,999 are being made available through Stage 1.

The date range used above has been selected as prior to it the hotel was still recovering from Covid. Indeed water consumption for the Spa Area only appears to have begun to return to normal levels in the last two months of the period used. The table below shows readings for a more extended period from 13/092021 to 16/08/2023.

MAIN HOTTEL AREA				SPA AREA				GATEHOUSE AREA			
Date	Reading	Days	L/d	Date	Reading	Days	L/d	Date	Reading	Days	L/d
13/09/2021	149008	-	-	13/09/2021	5835	-	-	13/09/2021	8717	-	-
06/12/2021	153264	84	50.67	06/12/2021	5840	84	0.06	06/12/2021	8830	84	1.35
27/01/2022	155326	52	39.65	27/01/2022	5857	52	0.33	27/01/2022	8893	52	1.21
23/02/2022	156404	27	39.93	23/02/2022	5870	27	0.48	23/02/2022	8927	27	1.26
27/05/2022	160068	93	39.40	27/05/2022	5903	93	0.35	28/04/2022	9015	64	1.38
13/06/2022	160771	17	41.35	13/06/2022	5908	17	0.29	13/06/2022	9184	46	3.67
28/07/2022	162653	45	41.82	22/08/2022	5920	70	0.17	26/07/2022	9314	43	3.02
22/08/2022	163810	25	46.28	29/11/2022	5951	99	0.31	22/08/2022	9457	27	5.30
21/09/2022	165540	30	57.67	17/02/2023	5977	80	0.33	21/09/2022	9507	30	1.67
10/10/2022	166870	19	70.00	07/06/2023	6326	110	3.17	10/10/2022	9538	19	1.63
17/02/2023	171686	130	37.05	25/07/2023	7884	48	32.46	29/11/2022	9617	50	1.58
07/06/2023	176323	110	42.15	16/08/2023	8572	22	31.27	17/02/2023	9739	80	1.53
25/07/2023	178378	48	42.81					07/06/2023	9930	110	1.74
16/08/2023	179340	22	43.73					25/07/2023	10020	48	1.88
								16/08/2023	10054	22	1.55
Average daily in period for Area			43.21	Average daily in period for Area			3.90	Average daily in period for Area			1.90
										AVERAGE DAILY TOTAL IN PERIOD	49.01

The average daily total for this extended period is consistent with the 12 month period selected to provide the current estimate of 52.674m3. The uptick in the Spa's usage during July and August 2023 will be monitored until a full 12 months of normal post Covid usage has been observed. The latest 3 month bills available for February to April show an average daily consumption across all Areas of over 70 m3/day which indicates that the increase has continued.

At this stage the offsetting requirement is for 19.999 m3/day which is well within the extended and latest usage data. The figure of 52.674 m3/day would appear very conservative based on the latest usage data. Actual meter readings are provided in Appendix B for the period in which the 52.674

m3/day was measured as well as the actual readings from 13/09/2021 the beginning of the extended period. Further meter readings are available on request.

When Stage 2 is brought online and once the EA licence has been approved the, it's anticipated that 52.674 m3/day will be increased and appropriate supporting evidence provided at that time. This is not required for this application which is based on offsetting just 19.999 m3/day.

It is important that the maximum level of consumption is understood so that the maximum amount of water can be removed from the mains supply and therefore decrease demand at Hardham. Should water use drop at the Site in the future then this still represents the same reduction in the mains supply, it just means that the private water supply is providing less water to the Site at that time.

Breakdown of Water Use by Area

The Main Hotel Area supply provides water for the following main consumers:

- Staff and guest toilet and washing facilities
- Cleaning and laundry
- Kitchens and bars
- Garden irrigation

The Spa Area supply provides water for the following main consumers:

- Staff and guest toilet and washing facilities
- Cleaning
- Pools and spas
- Kitchen
- Garden irrigation

The Gatehouse Area supply provides water for the following main consumers:

- Staff toilet and washing facilities
- Cleaning and laundry
- Kitchens
- Garden irrigation

Description of Boreholes

Two boreholes (BH) were drilled at the Site between the 11th and 22nd April 2024, both to 62 m depth and into the Upper Tunbridge Wells Sand Formation. The BH's locations are shown in Figure 1 and their respective drill logs are provided in Appendix C. they are labelled BH1 and BH2 for the purposes of this report and to be consistent with the hydrologist's report in Appendix E.

An initial test pump of BH1 was undertaken on 18th April 2024 (see Appendix D) and a maximum flow rate of 71 l/minute was achieved with a starting depth of 22.09m and a finishing depth of 25.95m. The flow rate is equivalent to 102 m3/day.

Assessment of Impact on Protected Areas

A senior hydrologist (Stephen Buss) examined whether the BH's could have an adverse effect on the integrity of Arun Valley Special Protection Area (SPA), Special Area of Conservation (SAC) and Ramsar site is provided in Appendix E. The impact statement in his report clearly shows there would be no adverse impact, stating:

> *"The site is in the catchment of the Cowfold Stream, which flows southwards to join the River Adur (Figure 2). The site is therefore not in the catchment of the River Arun, which at its closest is about 1.7 km north of the boreholes. The net impact of the proposed abstraction on the*

water balance of the River Arun catchment is therefore zero, and the potential impact on the Arun Valley SAC, SPA and Ramsar site is also therefore zero.

Bedrock geology is the Upper Tunbridge Wells Sand, and so the abstraction does not have continuity with the Lower Greensand aquifer of the Arun Valley."

Water Quality

Water quality is deemed treatable for the purposes of potable water and is discussed in detail in the Water Quality later in this report.

Borehole Yield and Sustainability Assessment

To assess sustainable yield BH1 was tested between 7 May 2024 and 9 May 2024 at an average rate of 20.8 m3/day. An EA licence has been applied for but at this stage BH1 has only been tested for an unlicenced supply which is why it was tested at this rate which is slightly above the maximum abstraction rate for an unlicenced supply (<20m3). Details and analysis of this test are documented in the senior hydrologist's report which is provided in Appendix E. The report provides the following conclusion.

"This note reviews the results of a pumping test at the borehole BH1 at South Lodge Hotel. The borehole was pumped over two days. The aquifer response is that of a confined aquifer. Seasonal variation has been considered and the likely drawdown after 60 years of operation has been estimated.

Given conservative assumptions about aquifer properties, there is no indication that the borehole does not offer a sustainable and safe source of at least 20 m3/day groundwater in perpetuity."

At this stage BH2 has not been yield tested as it is not required for Stage 1. Testing of this BH will take place during the EA abstraction licence application process. It is not needed to provide the 19.999 m3/day for the Stage 1 of the offsetting scheme.

Existing Supply Network

Figure 1 below shows the existing supply network. The mains supplies are connected to the local supplier's distribution network in Brighton Road. A existing header tanks for the Main Hotel Area and Spa Area together with distribution pumps ensure a consistent supply to these areas. The Gatehouse is a direct feed from the mains network.

Proposed Offsetting Scheme

BH1 and BH2 are not currently connected to the distribution network within the Site and are not currently filtered or treated. BH1 has a proven supply on an unlicenced basis of 20 m3/day without any effect on the protected sites.

The existing mains supplies provide an average of at least 52.674 m3/day. Stage 1 of the offsetting scheme will provide 19.999 m3/day for potable use within the main Hotel Area. This will reduce demand in the SNWRZ by 19.999 m3/day and allow that amount to be used to offset the future demands of new development. This will be facilitated through the Nicholls water credit scheme.

An EA abstraction licence application is currently in process and at the point that that is awarded Stage 2 of the offsetting scheme will be realised and the remaining demand of at least 32.675 m3/day will be provided by BH1 and BH2 working alternatively. At this stage all three areas of the hotel removed from the mains supply for up to that amount of daily water use. The plant and filtration equipment required to implement the initial 19.999 m3/day scheme will be suitable to provide the full Stage 2 system.

Stage 1 of the offsetting scheme will connect BH1 to a new treatment plant designed to provide a potable supply. This will be connected to the main Hotel Area supply via a new potable water storage tank. Figure 2 shows how the scheme will be laid out. The work will include:

1. Removing the existing storage tank and redundant structures.
2. Installation of appropriate potable water aeration & storage tanks, pumps, filtration, and treatment systems in a self-contained ISO container (see specification at Appendix F)
3. Water treatment design and quality testing to WHO standards and/or the standards set by the local authority's Environmental Health Officer (EHO)
4. Environmental Health Officer (EHO) sign-off and approval
5. Connection of the treated water supply from the new storage tank to the main Hotel Area supply using the existing distribution pipe (see Figure 2)
6. A telematics system will be installed to remotely monitor the borehole and record the amount of water supplied 24/7.

A batch meter will ensure that BH1 is not abstracting more than the limit for an unlicenced supply (<20 m3/day). The mains supply will continue to provide water to the main Hotel area for demand above 19.999 m3/day. This will be facilitated via an air separated feed (to comply with water regulations and ensure no water is fed back into the mains supply network) into the new storage tank. The mains supply will only switch on when the tank level drops below a certain level which will occur when the daily 19.999 m3 BH1 supply has been provided and switched off by the batch meter.

Ongoing Maintenance

Once the works are completed an annual maintenance programme will be set in place to ensure the offsetting measures are kept fully operational and the quality of the potable water supply continues to meets WHO standards and/or the standards set by the local authority's Environmental Health Officer (EHO). This will include periodic testing as specified by the EHO. The maintenance programme is set out in in the section below and will be undertaken by Nicholls Boreholes Servicing Team under annual contract to the Site.



Figure 1 – Existing Supply Network (pipe runs are indicative)



Figure 2 – Proposed Supply Network (pipe runs are indicative)

Water Quality

Appendix I - Groundwater Investigation Report provides a detailed assessment of the groundwater quality and proposed treatment. I addition to that report the physical features to be installed to protect the borehole from contamination are set out below.

The borehole will include the following protection measures.

- 2 external locks – to prevent unauthorised access.
- Twin skin GRP enclosure – to prevent changes in temperature and seal the area directly around the borehole to prevent ingress from the surface.
- Raised Plinth – to prevent external contaminants or surface flows entering the borehole.
- Bolt Down Well Head – to prevent unauthorised access and secure the borehole from the ingress of external contaminates.
- Grouting – to prevent ingress of surface flows or contaminants from the surface and any made up ground.
- Linings – to prevent ingress from geologies not targeted by design.

Ongoing Maintenance

A telemetric system will be installed which will allow the system to be remotely monitored by the Nicholl's servicing team 24/7 using an active alert system. Ongoing maintenance and water quality assurance routines are set out in Appendices G and I. Water quality will be sampled at a minimum on a biannual basis and should the EHO require a more frequent testing regime this will be implemented.

Further details regarding the water quality assurance and testing regime are set out in Appendix I - Groundwater Investigation Report.

Implementation of Measures, Planning Consents & Section 106 Agreements

The measures will be implemented and maintained at the borehole location under The South Lodge Hotel title (WSX331265) and appropriate s106 obligations should be tied to this land. A red edge plan will be provided on request. Separate planning obligations agreements will be entered into with each developer. Suggested s106 obligations on the Site owner and developer are provided in Appendix H.

Sufficient credits have been sold at time of publication with signed contracts in place to provide for the cost of implementing the measures and securing the ongoing maintenance.

The plant treatment room will be housed in a purpose-built ISO container as set out above. This does not require planning permission as it is a temporary structure. Notwithstanding that, it is being installed on an existing concrete hardstanding replacing existing structures.

Summary

The proposed offsetting scheme is based at a site in the Sussex North Water Supply Zone with a proven average consumption of at least 52.674 m3/day per day derived from the mains supplies. Stage 1 of the offsetting scheme will remove 19.999 m3/day from the mains demand with the remainder being removed when Stage 2 is brought online.

The scheme utilises an existing borehole with a proven yield that is in excess of 20 m3 per day and this has been assessed as having no effect on the protected areas.

The proposed offsetting scheme has be approved by Natural England under HDC application number DC/21/0749 (see Appendix J).

APPENDIX A – SITE LOCATION AND LOCATION PLAN

SITE LOCATION

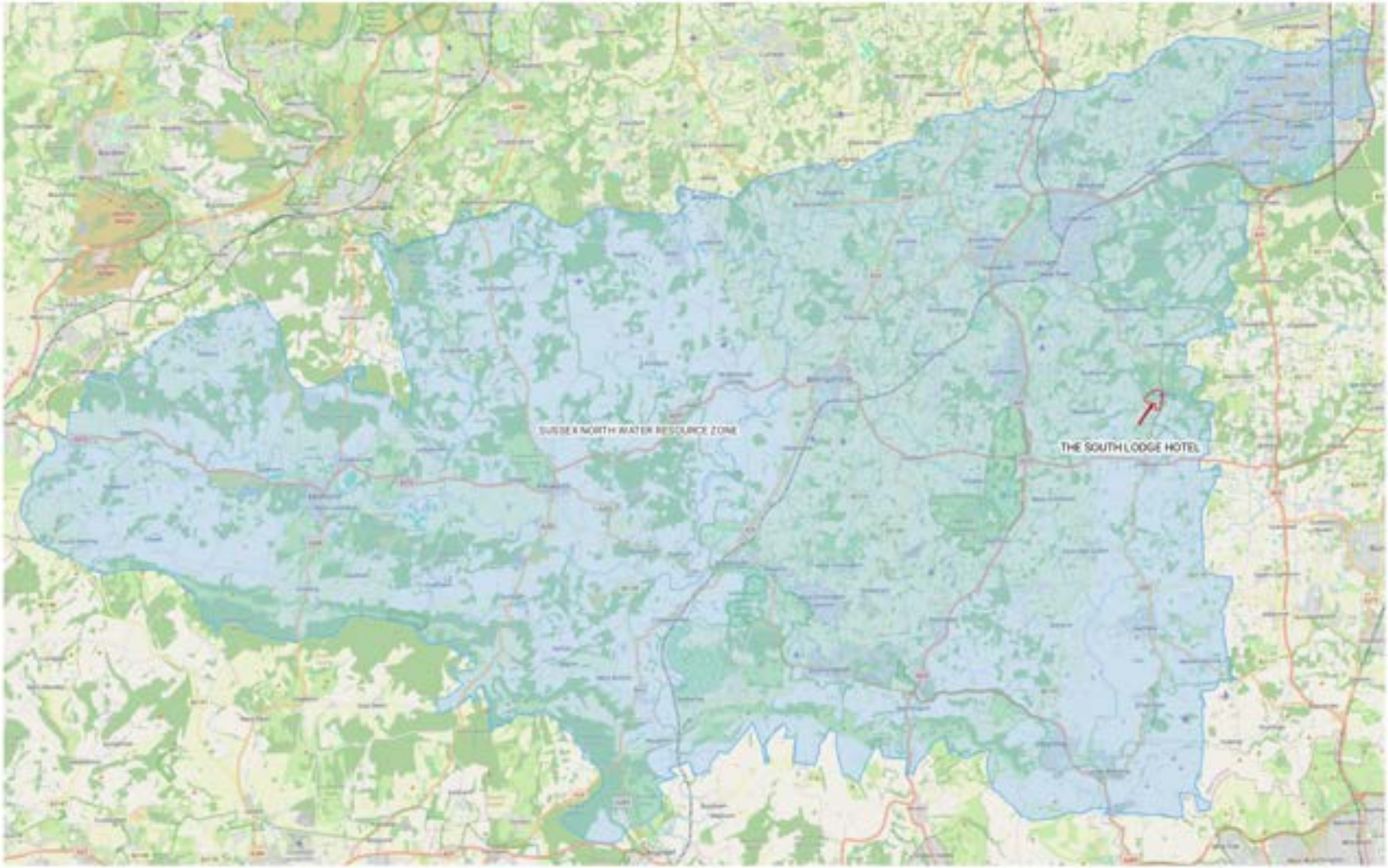

NICHOLLS WATER CREDITS

LOCATION PLAN

Land App



APPENDIX B – EVIDENCE OF EXISTING CONSUMPTION

WATER 2 BUSINESS BILL FOR METERS 11M50090 AND 17MS000318 SHOWING ACTUAL READINGS ON 22/08/2022

water business

[redacted]

Bill Number 900585032
Date (tax point) 31/08/2022

Details of Premises Supplied

	South Lodge				
Site Name		**South Lodge**	**South Lodge**	**South Lodge**	**South Lodge**
Site Reference	**South Lodge**	**South Lodge**	**South Lodge**	**South Lodge**	**South Lodge**
Water Supply Point ID (SPID)	3019500494W11	3019633230W16	3019633230W16	3019633230W16	3019457S3XW1X
Sewerage Supply Point (SPID)					
Meter Serial Number	3019500494	11M50090	17MS000318	9M085135	11AC001166
Last Actual Read Date		22/08/2022	22/08/2022	22/08/2022	22/08/2022
Last Actual Read		163810	5920	9177	9457
Meter Readings and Water Consumptions					
Bill Start Date	31/07/2022	31/07/2022	31/07/2022	31/07/2022	31/07/2022
Bill End Date	31/08/2022	31/08/2022	31/08/2022	31/08/2022	31/08/2022
Current Read Estimated	Estimated	Estimated	Estimated	Estimated	Estimated
Total Bill Days	31	31	31	31	31
Bill Start Reading	0	162869	5923	9315	9323
Bill End Reading	0	164198	5922	9177	9476
Gross Consumption (m3)	0	1329	-1	-138	153
Previous YTD Consumption	0	3171	39	138	359
Total YTD Consumption (m3)	0	4500	38	0	512
Charge Details - Water					
Tariff Code	NHH_UW_VAR	NHH_LB1	NHH_LB1	NHH_LB1	NHH_MWVQ1
1st Volumetric Rate	[redacted]				
Volumetric Charge					
2nd Volumetric Rate					
Volumetric Charge					
3rd Volumetric Rate					
Volumetric Charge					
Annual Standing Charge	31 days at £10	0.00	31 days at £580	0.00	31 days at £23
Standing Charge	[redacted]				
Total Water Charges	[redacted]				
Charge Details - Sewerage					
Tariff Code					
RTS %					
1st Volumetric Rate					
Volumetric Charge					
2nd Volumetric Rate					
Volumetric Charge					
3rd Volumetric Rate					
Volumetric Charge					
Highway & Surface Vol Rate					
Volumetric Charge					
Annual Standing Charge	0.00	0.00	0.00	0.00	0.00
Standing Charge	£0.00	£0.00	£0.00	£0.00	£0.00
Highway Drainage Charge					
Tariff Code					
Annual Standing Charge					
Standing Charge					
Surface Water Charge					
Tariff Code					
Annual Standing Charge					
Standing Charge					
Total Sewerage Charges					

NICHOLLS WATER CREDITS

WATER 2 BUSINESS BILL FOR METER 11AC001166 SHOWING ACTUAL READINGS ON 13/06/2022

water business

[redacted]

Bill Number 900576878
Date (tax point) 30/06/2022

Details of Premises Supplied

	South Lodge				
Site Name		**South Lodge**	**South Lodge**	**South Lodge**	**South Lodge**
Site Reference	**South Lodge**	**South Lodge**	**South Lodge**	**South Lodge**	**South Lodge**
Water Supply Point ID (SPID)	3019500494W11	3019633230W16	3019633230W16	3019633230W16	3019457S3XW1X
Sewerage Supply Point (SPID)					
Meter Serial Number	3019500494	11AC0030	17MS000318	SVC85125	11AC001166
Last Actual Read Date		13/06/2022	13/06/2022	13/06/2022	13/06/2022
Last Actual Read		160771	5908	9177	9184

Meter Readings and Water Consumptions

Bill Start Date	31/05/2022	31/05/2022	31/05/2022	31/05/2022	31/05/2022
Bill End Date	30/06/2022	30/06/2022	30/06/2022	30/06/2022	30/06/2022
Current Read Estimated	Y	Y	Y	Y	Y
Total Bill Days	30	30	30	30	30
Bill Start Reading	0	160399	5905	9177	9027
Bill End Reading	0	162156	5916	9177	9205
Gross Consumption (m3)	0	1757	11	0	178
Previous YTD Consumption	0	701	21	0	63
Total YTD Consumption (m3)	0	2458	32	0	241

Charge Details - Water

Tariff Code	NHH_UW_VAR	NHH_LB1	NHH_LB1	NHH_LB1	NHH_MWVOL
1st Volumetric Rate		[redacted]			
Volumetric Charge					
2nd Volumetric Rate					
Volumetric Charge					
3rd Volumetric Rate					
Volumetric Charge					
Annual Standing Charge	30 days at £10	0.00	30 days at £580	0.00	30 days at £23
Standing Charge		[redacted]			
Total Water Charges		[redacted]			

Charge Details - Sewerage

Tariff Code					
RTS %					
1st Volumetric Rate					
Volumetric Charge					
2nd Volumetric Rate					
Volumetric Charge					
3rd Volumetric Rate					
Volumetric Charge					
Highway & Surface Vol Rate					
Volumetric Charge					
Annual Standing Charge	0.00	0.00	0.00	0.00	0.00
Standing Charge	£0.00	£0.00	£0.00	£0.00	£0.00
Highway Drainage Charge					
Tariff Code					
Annual Standing Charge					
Standing Charge					
Surface Water Charge					
Tariff Code					
Annual Standing Charge					
Standing Charge					
Total Sewerage Charges					

WATER 2 BUSINESS BILL FOR METERS 11M50090, 17MS000318 AND 11AC001166 SHOWING ACTUAL READINGS ON 16/08/2023

water 2 business

[redacted]

Bill Number	900638247
Date (tax point)	31/08/2023

Premises Supplied					
Site Name	South Lodge	South Lodge	South Lodge	South Lodge	South Lodge
Site Reference	South Lodge	South Lodge	South Lodge	South Lodge	South Lodge
Water Supply Point ID (SPID)	3019500494W11	3019633230W16	3019633230W16	3019633230W16	3019457533W1X
Sewerage Supply Point (SPID)					
Meter Serial Number	Unmetered -	11M50090	17MS000318	9M085135	11AC001166
Last Actual Read Date		16/08/2023	16/08/2023	16/08/2023	16/08/2023
Last Actual Read		179340	8572	9177	10054
Meter Readings and Water Consumptions					
Bill Start Date	31/07/2023	31/07/2023	31/07/2023	31/07/2023	31/07/2023
Bill End Date	31/08/2023	31/08/2023	31/08/2023	31/08/2023	31/08/2023
Current Read Estimated	Estimated	Estimated	Estimated	Estimated	Estimated
Total Bill Days	31	31	31	31	31
Bill Start Reading	0	178650	7921	9177	10032
Bill End Reading	0	180021	8688	9177	10080
Gross Consumption (m3)	0	1371	767	0	48
Previous YTD Consumption	0	3871	364	0	145
Total YTD Consumption (m3)	0	5242	1131	0	193
Charge Details - Water					
Tariff Code	[redacted]				
1st Volumetric Rate					
Volumetric Charge					
2nd Volumetric Rate					
Volumetric Charge					
3rd Volumetric Rate					
Volumetric Charge					
Annual Standing Charge	31 days at [redacted]				
Standing Charge					
Total Water Charges					
Charge Details - Sewerage					
Tariff Code					
RTS %					
1st Volumetric Rate					
Volumetric Charge					
2nd Volumetric Rate					
Volumetric Charge					
3rd Volumetric Rate					
Volumetric Charge					
Highway & Surface Vol Rate					
Volumetric Charge					
Annual Standing Charge	0.00	0.00	0.00	0.00	0.00
Standing Charge	£0.00	£0.00	£0.00	£0.00	£0.00
Highway Drainage Charge					
Tariff Code					
Annual Standing Charge					
Standing Charge					
Surface Water Charge					
Tariff Code					
Annual Standing Charge					
Standing Charge					
Total Sewerage Charges					

NICHOLLS WATER CREDITS

WATER 2 BUSINESS BILL FOR METERS 11M50090, 17MS000318 AND 11AC001166 SHOWING ACTUAL READINGS ON 13/09/2021

water business

[redacted]

Bill Number 900544491
Date (tax point) 30/09/2021

Details of Premises Supplied

Site Name	**South Lodge**	**South Lodge**	**South Lodge**	**South Lodge**	**South Lodge**
Site Reference	**South Lodge**	**South Lodge**	**South Lodge**	**South Lodge**	**South Lodge**
Water Supply Point ID (SPID)	3019500494W11	3019633230W16	3019633230W16	3019633230W16	3019457530W1X
Sewerage Supply Point (SPID)					
Meter Serial Number	3019500494	9M085135	11M50090	17MS000318	11AC001166
Last Actual Read Date		13/09/2021	13/09/2021	13/09/2021	13/09/2021
Last Actual Read		9177	149006	5835	8717
Meter Readings and Water Consumptions					
Previous Reading Date	31/08/2021	31/08/2021	31/08/2021	31/08/2021	31/08/2021
Current Reading Date	30/09/2021	30/09/2021	30/09/2021	30/09/2021	30/09/2021
Current Read Estimated (Y/N)	Y	Y	y	Y	y
Total Days	30	30	30	30	30
Previous Reading	0	9178	152699	5851	8612
Current Reading	0	9178	150677	5845	8730
Gross Consumption (m3)	0	0	-2022	-6	118
Previous YTD Consumption		0	10665	52	96
Total YTD Consumption (m3)		0	8643	46	214
Charge Details - Water					
Tariff Code	NHH	[redacted]			
1st Volumetric Rate					
Volumetric Charge					
2nd Volumetric Rate					
Volumetric Charge					
3rd Volumetric Rate					
Volumetric Charge					
Annual Standing Charge	30 days at £10	0.00	0.00	30 days at £540	30 days at £23
Standing Charge		[redacted]			
Total Water Charges					
Charge Details - Sewerage					
Tariff Code					
RTS %					

APPENDIX C – BH1520 DRILL LOGS



BH1

Borehole record form

NICHOLLS BOREHOLES & GROUND SOURCE

British Geological Survey
NATURAL ENVIRONMENT RESEARCH COUNCIL

Environment Agency

Water Resources Act 1991 (as amended by the Water Act 2003)

A Site details

Borehole drilled for: South Lodge Hotel and Spa

Location: Brighton Road, Lower Beeding, Horsham, RH13 6PS

NGR (ten digits): TQ21748 25498 Please attach site plan

Ground level (if known): metres Above Ordnance Datum

Drilling company: Nicholls Boreholes

Date drilling commenced: 11/04/2024 (DD/MM/YYYY) Completed: 17/04/2024 (DD/MM/YYYY)

B Construction details

Borehole datum (if not ground level): metres (m). Please tick if this is above ☐ or below ☐ ground level.
(point from which all measurements of depth are taken, for example, flange, edge of chamber)

Borehole drilled diameter

300	mm from	0	to	36 m/depth
200	mm from	36	to	62 m/depth
	mm from		to	m/depth
	mm from		to	m/depth

Casing material: Steel	diameter	200	mm from	0	to	36	m/depth

and type (for example, if plain steel, plastic slotted). Please record permanent casing details, not temporary casing.

Casing material: Solid UPVC	diameter	125	mm from	0	to	35.35	m/depth
Casing material: Slotted UPVC	diameter	125	mm from	35.25	to	61	m/depth
Casing material:	diameter		mm from		to		m/depth

Grouting details: 68 bags of washed shingled, 20 bags of mikolit seal

Water struck at 1. m (depth below datum – mbd) 2. m (mbd)
3. m (mbd) 4. m (mbd)

C Test pumping summary (Please supply full details on form WR39)

Test pumping datum (if different from borehole datum): m. Please tick if this is above ☐ or below ☐ ground level.

Pump suction depth: mbd

Water level (start of test): mbd

Water level (end of test): mbd

Type of test (for example, bailer, step, constant rate):

Pumping rate: m^3/hour ☐ or litres/second ☐. Please tick as appropriate.

for days, hours, mins

Recovery to mbd in days, hours, mins
(from end of pumping)

Date(s) of measurements Pump started (DD/MM/YYYY)
Pump stopped (DD/MM/YYYY)

Please supply chemical analysis if available. If you have included this please tick this box ☐

NICHOLLS WATER CREDITS

Project				BOREHOLE No
South Lodge Hotel				1a
Job No	Date	Ground Level (m)	Co-Ordinates ()	
AL162 / BH1520	11-04-24 15-04-24			
Contractor				Sheet
Nicholls				1 of 1

SAMPLES & TESTS			Water	STRATA				Geology	Instrument/ Backfill
Depth	Type No	Test Result		Reduced Level	Legend	Depth (Thickness)	DESCRIPTION		
						0.50	TOP SOIL: Medium soft very moist light brown organic silty CLAY. Frequent roots and rootlets.		
						2.00	Medium firm brown very clayey silty MUDSTONE.		
						(5.00)	Medium firm dark yellow brown very clayey MUDSTONE.		
						7.00	Firm light blue silty CLAY and reddish brown MUDSTONE.		
						(11.00)			
						18.00	Firm dark brown red silty MUDSTONE.		
						(16.00)			
						34.00			
						36.00	Firm light blue silty CLAY with mudstone.		
						(25.00)	Firm light blue grey silty CLAY with mudstone.		
						61.00			
						62.00	Firm pale grey silty CLAY (Grinstead clay)		

Boring Progress and Water Observations						Chiselling			Water Added		GENERAL REMARKS
Date	Time	Depth	Casing Depth	Casing Dia. mm	Water Dpt	From	To	Hours	From	To	
											Service avoidence procedure followed. Rotary open hole No visual or olfactory sings of contamination.

All dimensions in metres Scale 1:393.75	Client South Lodge Hotel	Method/ Plant Used Massenza	Logged By SP

NICHOLLS WATER CREDITS

BH2

Borehole record form

NICHOLLS BOREHOLES & GROUND SOURCE

British Geological Survey NATURAL ENVIRONMENT RESEARCH COUNCIL

Environment Agency

Water Resources Act 1991 (as amended by the Water Act 2003)

A Site details

Borehole drilled for: South Lodge Hotel and Spa

Location: Brighton Road, Lower Beeding, Horsham, RH13 6PS

NGR (ten digits): TQ21665 25459 Please attach site plan

Ground level (if known): metres Above Ordnance Datum

Drilling company: Nicholls Boreholes

Date drilling commenced: 18/04/2024 (DD/MM/YYYY) Completed: 22/04/2024 (DD/MM/YYYY)

B Construction details

Borehole datum (if not ground level): metres (m). Please tick if this is above ☐ or below ☐ ground level.
(point from which all measurements of depth are taken, for example, flange, edge of chamber)

Borehole drilled diameter

300	mm from	0	to	30	m/depth
200	mm from	30	to	62	m/depth
	mm from		to		m/depth
	mm from		to		m/depth

Casing material: Steel	diameter	200	mm from	0	to	30	m/depth
Casing material: Solid UPVC	diameter	125	mm from	0	to	32.5	m/depth
Casing material: Slotted UPVC	diameter	125	mm from	32.5	to	61	m/depth
Casing material:	diameter		mm from		to		m/depth

and type (for example, if plain steel, plastic slotted). Please record permanent casing details, not temporary casing.

Grouting details: 54 bags of washed shingled, 17 bags of mikolit seal

Water struck at 1. m (depth below datum – mbd) 2. m (mbd)
3. m (mbd) 4. m (mbd)

C Test pumping summary (Please supply full details on form WR39)

Test pumping datum (if different from borehole datum): m. Please tick if this is above ☐ or below ☐ ground level.

Pump suction depth: mbd

Water level (start of test): mbd

Water level (end of test): mbd

Type of test (for example, bailer, step, constant rate):

Pumping rate: m^3/hour ☐ or litres/second ☐. Please tick as appropriate.

for: days, hours, mins

Recovery to mbd in: days, hours, mins
(from end of pumping)

Date(s) of measurements: Pump started (DD/MM/YYYY)
Pump stopped (DD/MM/YYYY)

Please supply chemical analysis if available. If you have included this please tick this box ☐

NICHOLLS WATER CREDITS

Project				BOREHOLE No
South Lodge Hotel				2
Job No	Date	Ground Level (m)	Co-Ordinates ()	
AL162 / BH1520	16-04-24 18-04-24	TQ 21666 25470		
Contractor				Sheet
Nicholls				1 of 2

SAMPLES & TESTS			Water	STRATA				Geology	Instrument/ Backfill
Depth	Type No	Test Result		Reduced Level	Legend	Depth (Thick-ness)	DESCRIPTION		
						0.50	TOP SOIL: Medium soft very moist light brown orange organic friable silty CLAY. Frequent roots and rootlets.		
						(6.00)	Medium firm dark yellow very clayey MUDSTONE.		
						6.50			
						(11.00)	Medium firm light blue grey silty CLAY and reddish brown MUDSTONE.		
						17.50			
						(12.50)	Firm dark brown reddish silty MUDSTONE with interstitial ferrous staining.		
						30.00			
						(20.00)	Medium firm grey silty MUDSTONE.		
						50.00			
						(12.00)	Firm light blue silty CLAY and MUDSTONE.		
						61.00			
						62.00	Firm pale grey silty CLAY (Grinstead clay)		

Boring Progress and Water Observations					
Date	Time	Depth	Casing Depth	Casing Dia. mm	Water Dpt

Chiselling			Water Added	
From	To	Hours	From	To

GENERAL REMARKS

Service avoidence procedure followed.
Rotary open hole
No visual or olfactory sings of contamination.

All dimensions in metres Scale 1:393.75	Client South Lodge Hotel	Method/ Plant Used Massenza	Logged By MC

APPENDIX D – BH1 INITIAL TEST PUMPING RECORD

NICHOLLS BOREHOLES & GROUND SOURCE

Test Pumping Record

Client Name	BAY WAIT		Operator Name		M.V. P.S		
Address	SOUTH LODGE HOTEL RH13 6PS						
Project Number	BH1520		Date		18.04.24		
Installation Method (please circle)	Terex One	Terex Two	Yellow Tow Behind Reeler	Narrow Black Reeler	Wide Black Reeler	By Hand	Versa.
Left on site? (please circle)	Yes			No			
Pump Used	VS 4/14						
Motor Used	1.1 kW 400 V						
Timer Fitted	Yes/No	Type	On for		Off for		
Well Depth (m) (from dip-meter reading)	61						
Pump Depth (m) (from Team Up and/or rig)	50						
Rest Water Level at Start (m) (from dip-meter reading)	21.90						
Start stop watch before turning pump on							
Draw Down (please circle)	Static level achieved for at least 1h			To pump			
	Time ran for (min)	30		Time taken (min)			
	Depth (m)	25.95		Depth (m)			
	Max flow rate (L/m)	71		Max flow rate (L/m)			
Pump Restricted	Yes/No	Pump restricted to (L/m)					
Draw Down Test Pumping Regime							
Time taken to draw down (min)	First run						
	10 min rest						
	10 min rest						
	20 min rest						
Recovery rate (m/min)							
Samples Taken (please circle)	Yes/NS	Lab sample		Office sample			
Rest water level at end (m)	22.09						

APPENDIX E –HYDROLOGIST'S ASSESSMENT OF IMPACT ON PROTECTED SITES, SUSTABLE YIELD, WATER QUALITY AND TEST PUMP LOGS

Stephen Buss Environmental Consulting Ltd

MEMORANDUM:
Review of Pumping Test Data, South Lodge Hotel

Document reference: 2024-095-025-001 Dated: 28/05/2024

Scope and Introduction

The site is South Lodge Hotel, Brighton Road, Lower Beeding, Horsham RH13 6PT (Figure 1). It has been proposed that abstraction at the site can provide a water offsetting solution to sites within the Sussex North water supply zone. To date all water supply has been obtained from mains water supply, sourced from the Sussex North WSZ. This is to be replaced by a borehole supply from local water resource. The reduction of up to 20 m^3/day from the Sussex North WSZ is to be credited against developments within the WSZ which are unable to otherwise demonstrate water neutrality.

Natural England (2022) believes that groundwater abstraction in the Sussex North water supply zone (WSZ) has a detrimental impact on the Arun Valley SAC, SPA and Ramsar site. To try to prevent further deterioration of the SAC, SPA and Ramsar site, Natural England insists that:

> "For every new development, total water use in the Sussex North Water Supply Zone after the development must be equal to or less than the total water-use in the region before the new development."

Hence each new development will need to demonstrate how that development will achieve no net increase in water consumption, by water efficiency measures, offsetting or not being reliant on groundwater resources that are used for public water supply in the WSZ.

By removing the reliance on mains water from the WSZ at these sites, and drawing water from a source that is not hydrologically connected to the WSZ, it is proposed that the amount of water saved can be used to offset at development sites within the WSZ that do not have the ability to use groundwater.

This report has been written by Dr Stephen Buss MA MSc CGeol, based on the field work and preparatory work of Nicholls Licensing and Consulting. Dr Buss is a UK-based independent hydrogeologist with more than 25 years' consulting experience. Dr Buss's CV and publications list is available at www.hydro-geology.co.uk.

Water Neutrality Impact Statement

The site is in the catchment of the Cowfold Stream, which flows southwards to join the River Adur (Figure 2). The site is therefore not in the catchment of the River Arun, which at its closest is about 1.7 km north of the boreholes. The net impact of the proposed abstraction on the water balance of the River Arun catchment is therefore zero, and the potential impact on the Arun Valley SAC, SPA and Ramsar site is also therefore zero.

Bedrock geology is the Upper Tunbridge Wells Sand, and so the abstraction does not have continuity with the Lower Greensand aquifer of the Arun Valley.

The Boreholes

The boreholes were drilled between the 11th and 22nd April 2024, both to 62 m into the Upper Tunbridge Wells Sand Formation. The drillers' logs record yellow sand/clay with sandstones to 6.5 m or 7.0 m depth then grey clays and mudstones, with interbedded sandstones and limestones to 61 m depth. The boreholes terminated in greenish grey clay of the Grinstead Clay Formation (Appendix A). Figure 1 shows a schematic diagram of the boreholes.

Pumping Test Analysis

Borehole 1 was tested between 7 May 2024 and 9 May 2024 at an average rate of 20.8 m^3/day, resulting in a drawdown of 0.47 m (Figure 1). There was no response to very heavy rainfall on the 6th May (34 mm fell in total).

Two methods of estimating flow were used: a totalising flow meter, which records the total amount of flow passing through for the duration of the test; and an instantaneous flow gauge, which records the flow at a given time. For estimating average rate the totalising flow meter is the most reliable source, hence the representative average rate in the following calculations is taken as 20.8 m^3/day.

Drawdown for each borehole is plotted on Figure 2. Drawdown, on a semi-log scale, is plotted for Cooper-Jacob analysis of the data in Figure 4, and recovery data, plotted for Theis analysis, is shown on Figure 5. Aquifer parameters are as follows:

	BH1 data	BH2 data
Cooper-Jacob: transmissivity (m^2/day)	31.1	30.5
Cooper-Jacob: storage coefficient (-)	-	$4x10^{-6}$
Theis recovery: transmissivity (m^2/day)	76.1	76.1

Interpretation

The Tunbridge Well Sand Formation is one of the key aquifers of the Wealden District, and supports many minor groundwater abstractions. The BGS memoir for sheet 302 (Horsham) indicates that:

> "Groundwater flow within the Tunbridge Wells Sand is both intergranular and through joints, and well yields tend to be variable… a shaft at Crawley yielded 650 m^3/day from the Upper Tunbridge Wells Sand. Because of variable yields and siltation with usage borehole supplies are… variable with yields varying from 20 to more than 2000 m^3/day. The mean yield for a 300 mm diameter borehole penetrating 30 metres of saturated Tunbridge Wells Sand in the Wealden district has been calculated to be 750 m^3/day for a 10 metre drawdown. The same analysis suggests that there would be a 20% probability that the yield would be less than 300 m^3/day for the same drawdown."

This memo only deals with the potential for the abstraction of 20 m^3/day which is much less that the pessimistic value of 300 m^3/day cited above.

The pumping test results plot close to a straight line on a log-time chart (Figure 5), which is expected for a confined aquifer. The water-bearing formation in these boreholes is the mudstone with interbedded sandstones and limestones: most flow probably comes via fractures in the sandstone and limestone units.

The borehole maintained a constant pumping rate of 20.8 m^3/day for two days, with very limited drawdown at the pumping borehole. Transmissivity values are similar from each borehole. Most of the recovery from the pumping tests was quick after each test. Water levels recovered to levels slightly higher than the starting level, but this was probably due to background groundwater level fluctuation.

The test was undertaken in spring, when groundwater levels were likely high, after a very wet winter. A groundwater level hydrograph from the Environment Agency's Kingstanding observation borehole, near Crowborough, shows that the typical seasonal range of groundwater levels is about 6 m in the Ashdown Sands Formation (which is a similar aquifer to the Tunbridge Wells Sand). Hence a typical summer water level in BH1 might be closer to 28 m depth.

Long-term estimates of drawdown can be made by assuming the range aquifer properties determined above. Using the Theis equation for confined aquifers, these suggest that the drawdown after 60 years would be as shown in Figure 6, for different abstraction rates up to 20 m^3/day. The maximum likely drawdown is 2.3 m. Allowing for a further 6.0 m seasonal drop in levels from the April 2024 peak of 22.1 m, the long-term lowest water level can be estimated at 30.4 m. Clearly, therefore, groundwater will be available from the borehole all year round, and as the open section of the borehole is below 30 m depth there should be no seasonal change in borehole performance.

Water Quality and Potential for Contamination

Water quality from the borehole was tested in May 2024 (Appendix B). The water is soft, with low mineralisation. It is anoxic (elevated ammonium, iron and manganese; low nitrate). There was slightly elevated turbidity and detectable concentrations of coliforms. All of these issues can be dealt with via water treatment.

Since it is anoxic the water is demonstrably old and the upper layers of the subsurface comprise layers of mudstones and clays. Heavy rainfall on 6 May 2024 did not reach the water table during the week following the rain. Water quality in the aquifer will be stable.

There are no potentially polluting land uses in the area around Crabtree. Given this, and since the intake to the borehole source is so deep, and there are many mudstone layers in the upper 30 m of the formation, there is no risk of gross contamination reaching the borehole.

Conclusions

This note reviews the results of a pumping test at the borehole BH1 at South Lodge Hotel. The borehole was pumped over two days. The aquifer response is that of a confined aquifer. Seasonal variation has been considered and the likely drawdown after 60 years of operation has been estimated.

Given conservative assumptions about aquifer properties, there is no indication that the borehole does not offer a sustainable and safe source of at least 20 m^3/day groundwater in perpetuity.

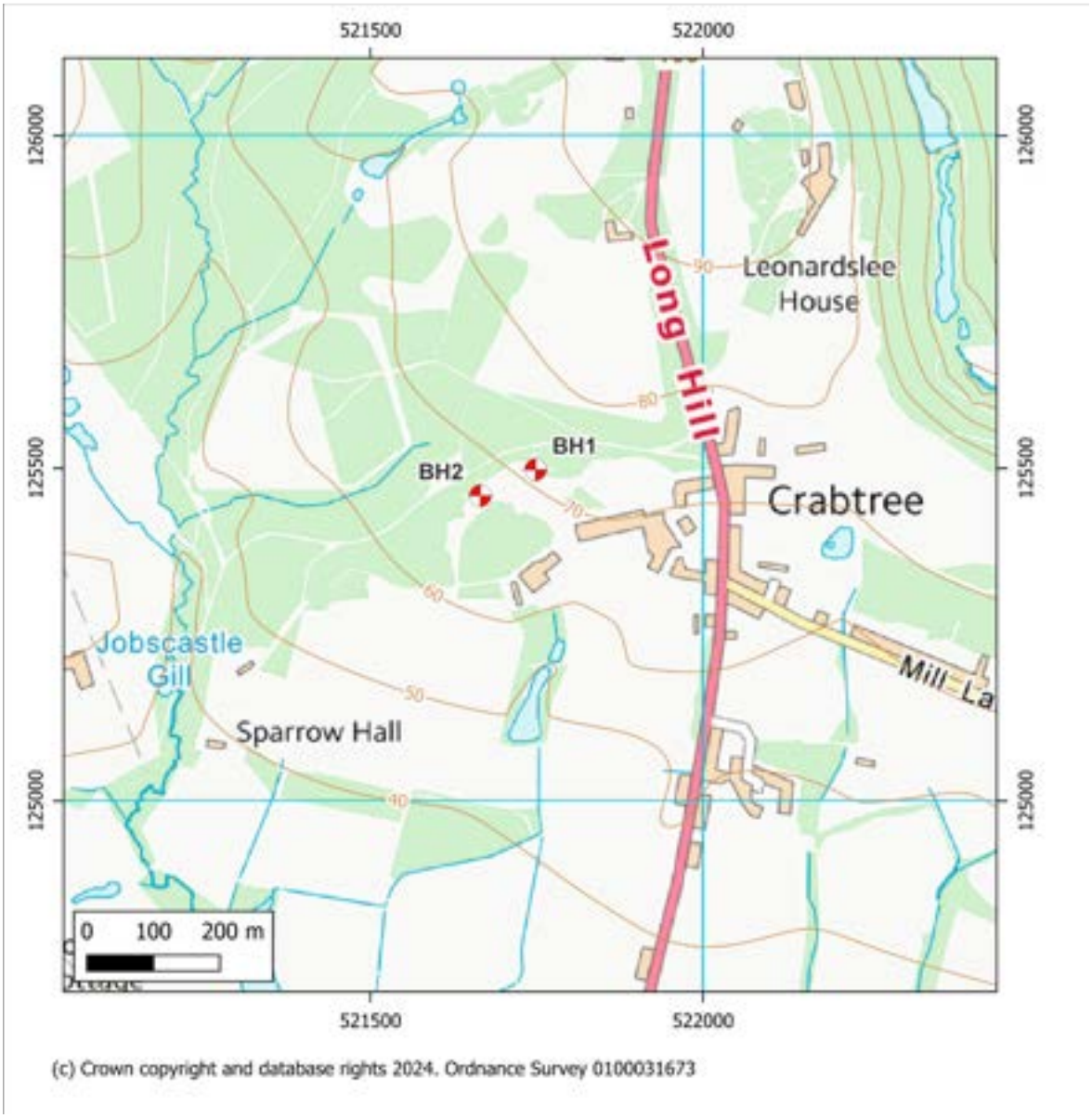

Figure 1: Borehole locations

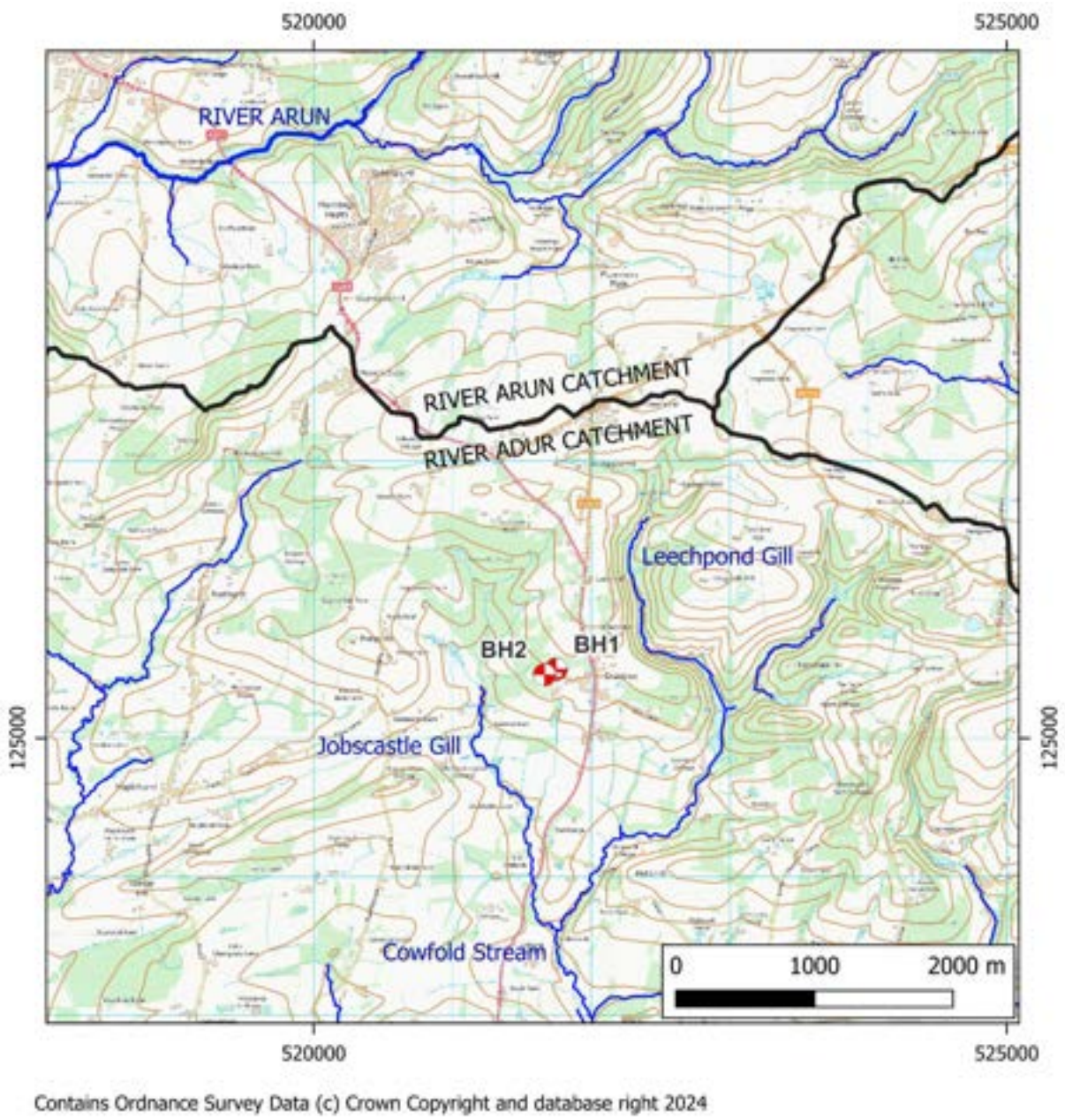

Figure 2: Watercourses and catchment boundaries

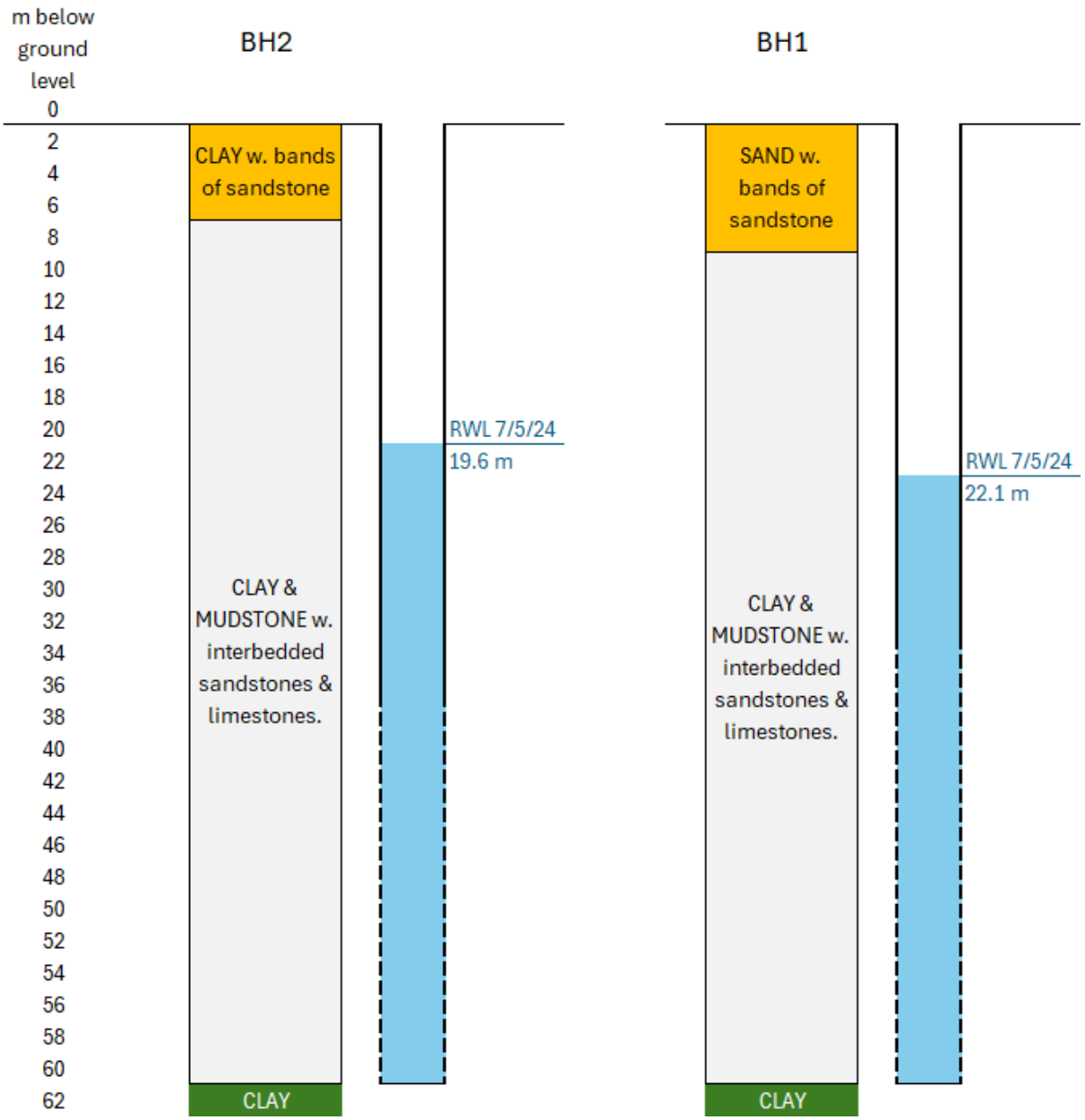

Figure 3: Schematic west-east section through boreholes

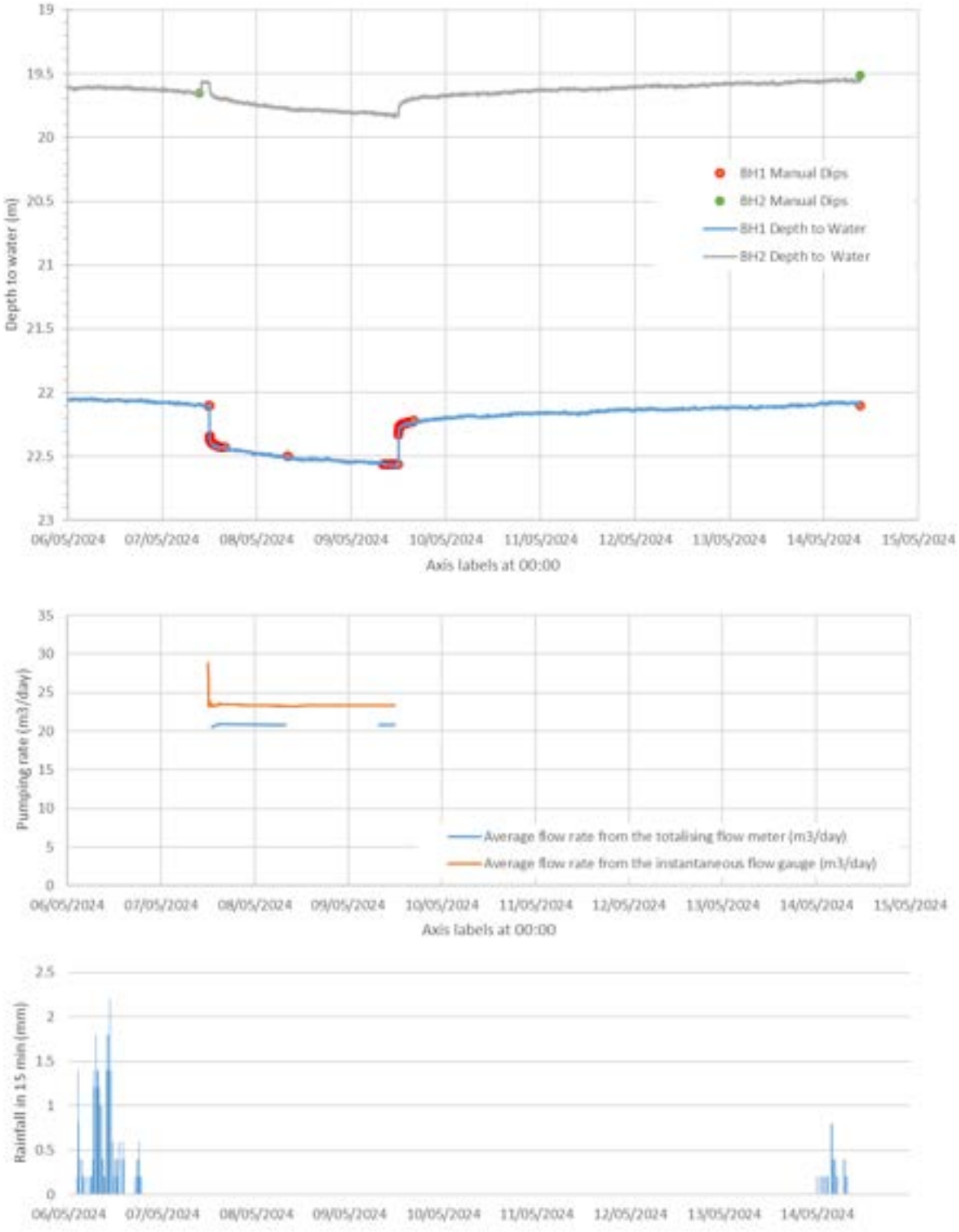

Figure 4: Groundwater levels, pumping rates and rainfall at EA Cowfold gauge

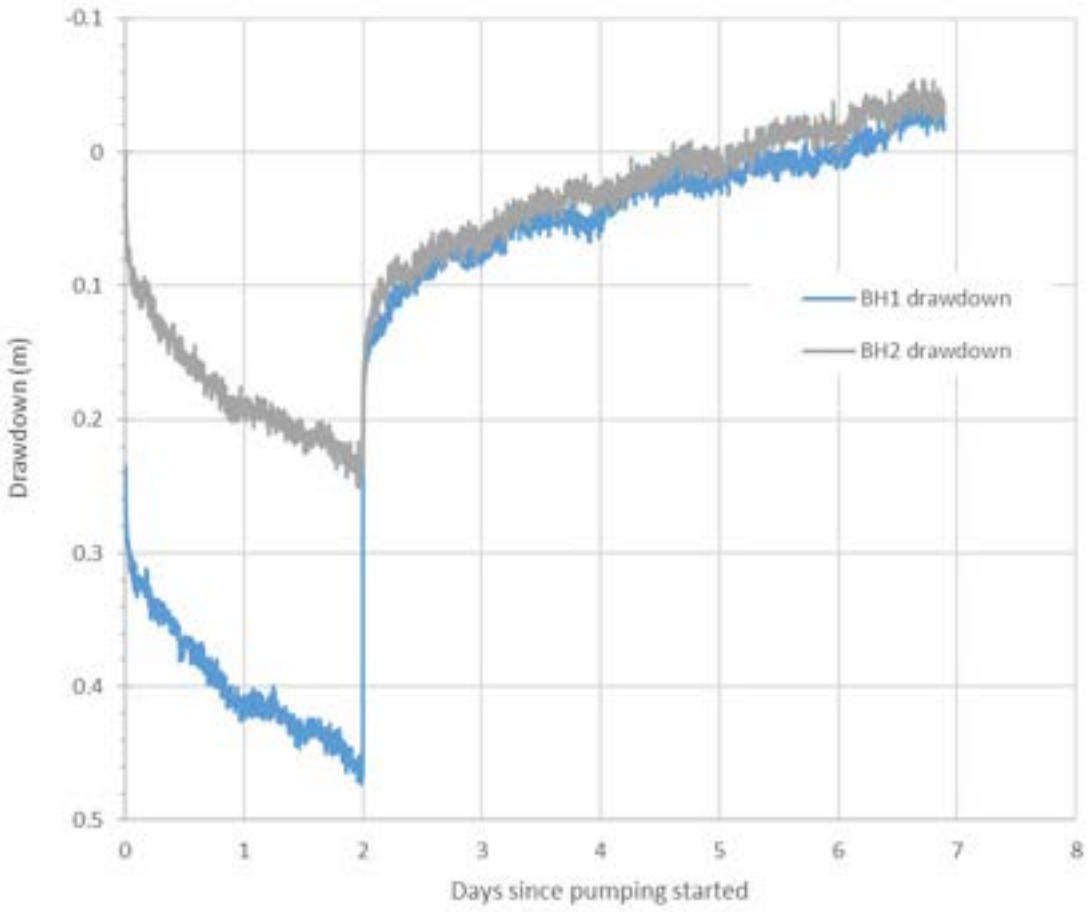

Figure 5: Drawdown

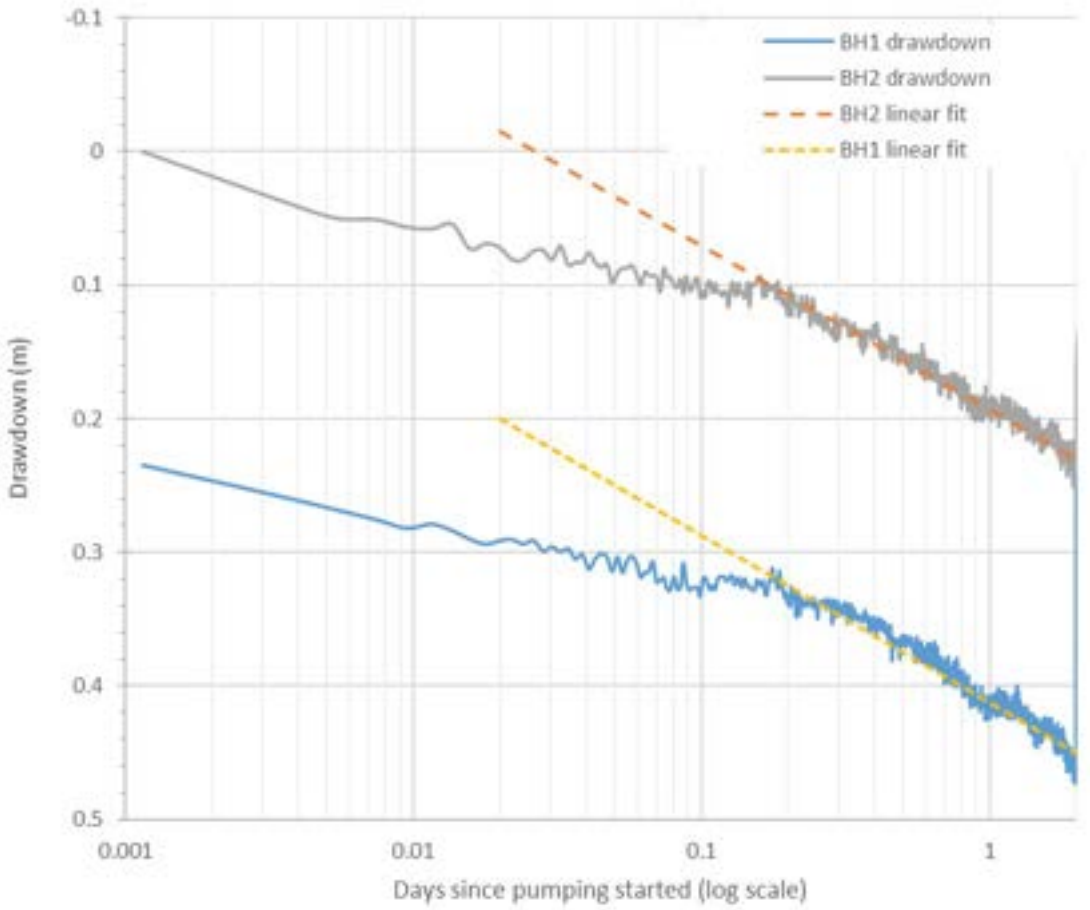

Figure 6: Drawdown on a log-time scale, and linear fit lines

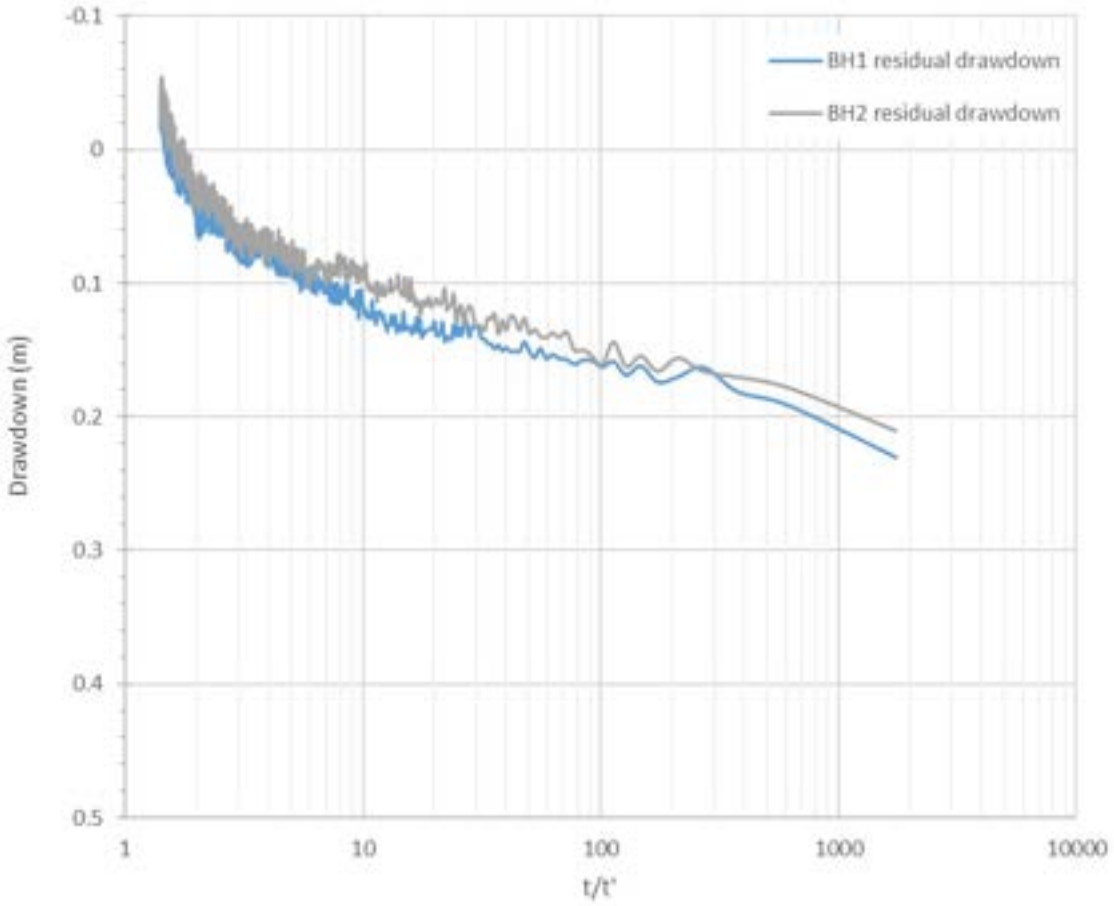

Figure 7: Residual drawdown during recovery on a log-t/t' scale

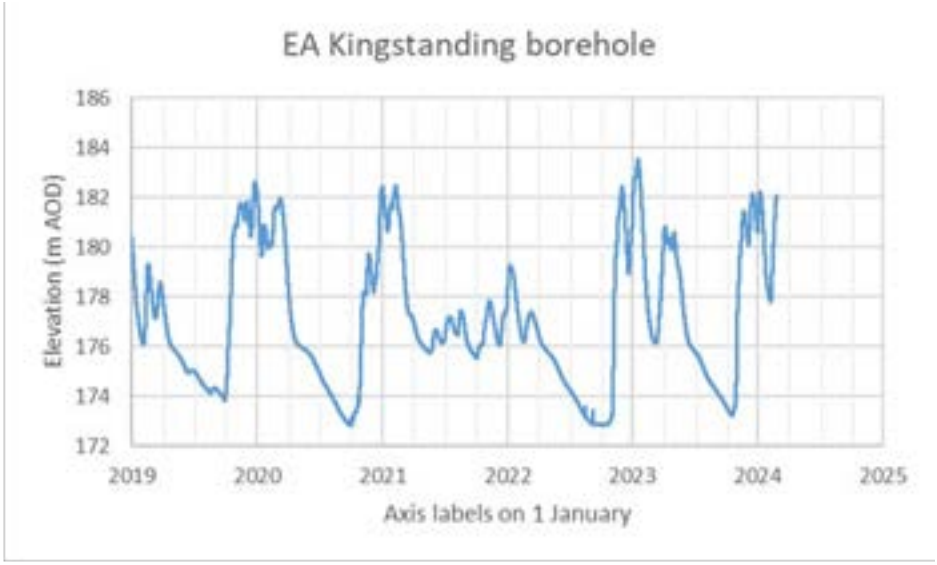

Figure 8: Groundwater levels in the Ashdown Sands Formation

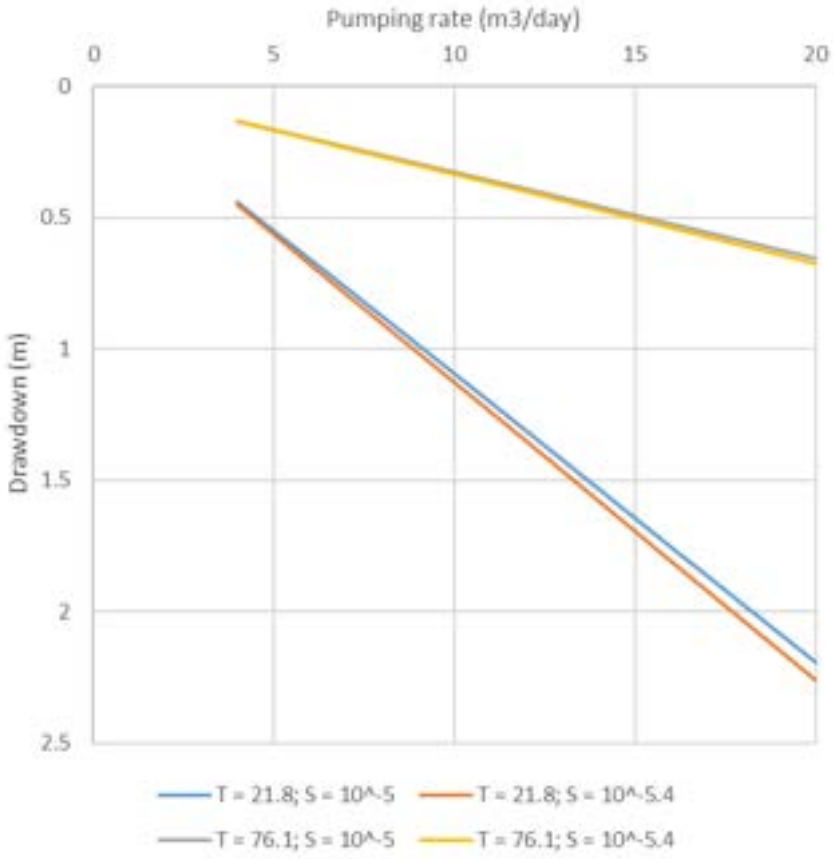

Figure 9: Potential drawdown at 60 years, given different pumping rates and aquifer properties

APPENDIX F – TREATMENT SYSTEM AND PLANT ROOM SPECIFICATION AND WATER QUALITY TEST CERTIFICATE

Purpose

To provide a filtration, storage & delivery system from the borehole at the offsetting site via an underground pipe network to multiple outlets.

High Level Description of the Treatment and Filtration System.

A borehole fed filtration system that comprises contact & resin-based filters with auto backwash, feeding a central reverse osmosis (RO) unit with multiple membranes & concentrate re-treatment for high efficiency.

Post RO water is re-mineralised before passing through a UV/sediment filter & chlorine dosing & monitoring unit into an insulated break tank.

A duty stand by booster pump set will draw from the tank and deliver water at a constant flow and pressure to all users; the control for which is demand based. The entire system is monitored by a multi-point telemetry system which picks up fault outputs from all key components, displays critical system performance indicators, delivers alarm alerts & records flow rates/volumes & overall performance back to a remote monitoring station/person.

Key spare parts will be stored within the plant room & central stores to facilitate swift system support & repair. WSP & service/maintenance manuals all to be available within the plant room.

The system will be designed in close collaboration with the incumbent local authority. Following completion of the works the system would be risk assessed & signed off by the local authority's Environmental Health Department.

A suitable bespoke service & maintenance regime (see maintenance section below) would be implemented following commissioning, this service offering would adapt the system for the long term & include interval sampling to monitor system performance.

Primary System Components

- Borehole pump to provide system flow via pressure control.
- 2x Water meters for record keeping and service measurement.
- 1x Particulate & iron contact filer with auto backwash.
- 1x ion exchange unit with auto backwash.
- 1x Reverse osmosis unit.
- 1x re-mineraliser unit.
- 1x pre tank UV & sediment filter.
- 16m3 insulated storage tank.
- 1x chlorine dosing unit with constant PPM level monitoring & adjustment.
- Duty stand-by booster pumps to provide flow & pressure to the network.
- Overarching telemetry system to provide remote monitoring & alarms.

A Filtration System Schematic is shown overleaf and further details of the Water Quality Analysis are provided in Appendix I - Groundwater Investigation Report.

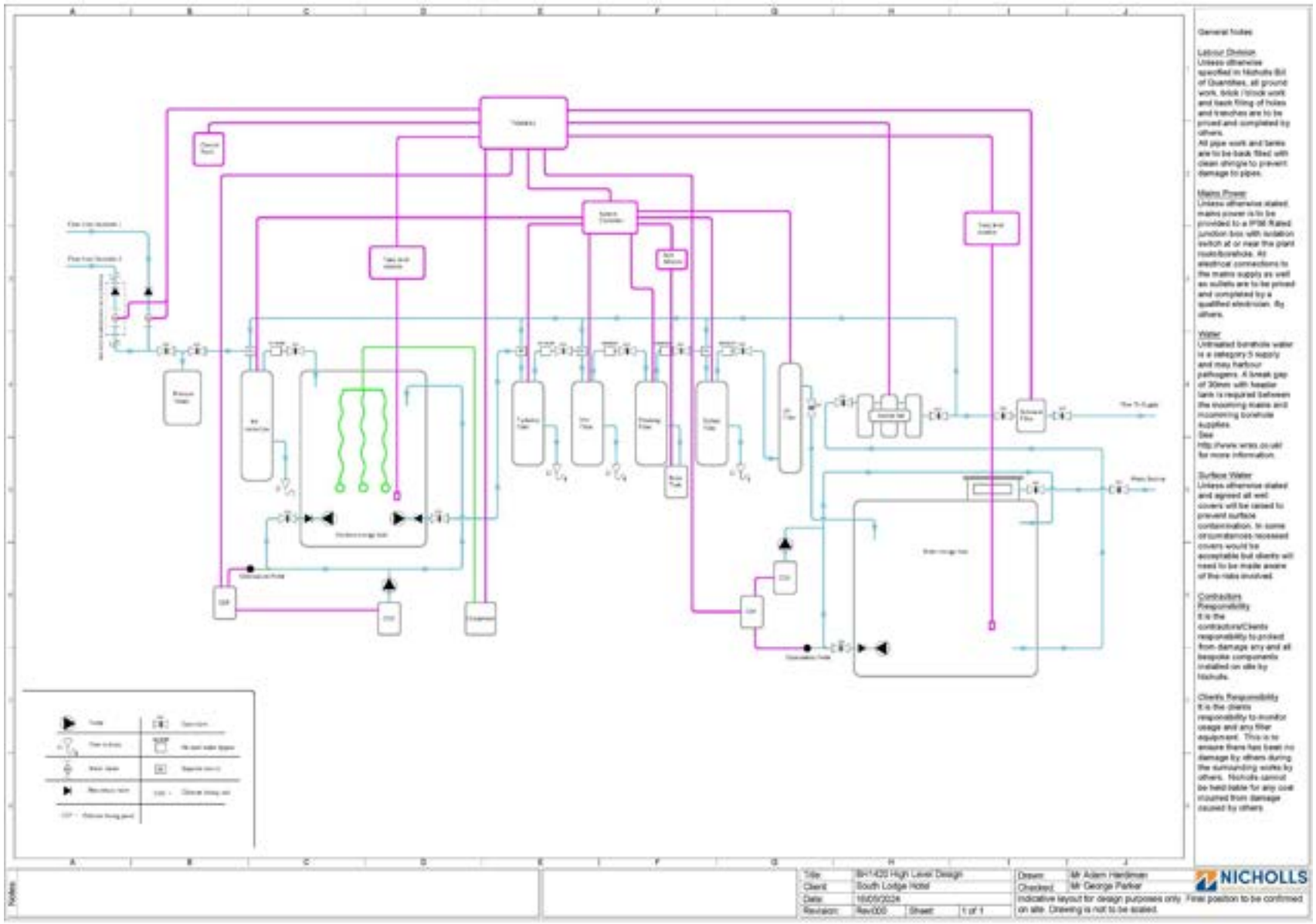
General Notes
Labour Division
Unless otherwise specified in Nichols Bill of Quantities, all ground work, brick / block work and back filling of holes and trenches are to be priced and completed by others.
All pipe work and tanks are to be back filled with clean shingle to prevent damage to pipes.
Mains Power
Unless otherwise stated mains power is to be provided to a IP56 Rated junction box with isolation switch at or near the plant room/borehole. All electrical connections to the mains supply as well as outlets are to be priced and completed by a qualified electrician. By others.
Water
Untreated borehole water is a category 5 supply and may harbour pathogens. A break gap of 30mm with header tank is required between the incoming mains and incomming borehole supplies.
See http://www.wras.co.uk/ for more information.
Surface Water
Unless otherwise stated and agreed all weir covers will be raised to prevent surface contamination. In some circumstances recessed covers would be acceptable but clients will need to be made aware of the risks involved.
Contractors Responsibility
It is the contractors/Clients responsibility to protect from damage any and all bespoke components installed on site by Nichols.
Clients Responsibility
It is the clients responsibility to monitor usage and any filter equipment. This is to ensure there has been no damage by others during the surrounding works by others. Nichols cannot be held liable for any cost incurred from damage caused by others
Notes
Title BH1400 High Level Design
Client South Lodge Hotel
Date 16/05/2024
Revision Rev000 Sheet 1 of 1
Drawn Mr Adam Henderson
Checked Mr George Parker
indicative layout for design purposes only. Final position to be confirmed on site. Drawing is not to be scaled.
NICHOLLS

NICHOLLS WATER CREDITS

South East Water Scientific Services
3 Columbus Drive, Farnborough
Hampshire, GU14 0NZ
E-Mail: sales@southeastwater.co.uk
Website: www.southeastwater.co.uk

south east water
scientific services

ANALYTICAL REPORT

NICHOLLS BOREHOLES
Brownings Barn
Glasshouse Lane
Kirdford
West Sussex
RH14 0LW

Certificate Number: 1248571-3 Final
Supercedes report 1248571-2

Order Number: BH1520

Collected From: BRIGHTON ROAD, LOWER BEEDING, HARSHAM RH13 6PS

Date Received: 09/05/2024 **Date Reported:** 30/05/2024

Lab Ref.	Sample Details	Method	Test	Result	Units	Limit	Flag
4761624	Desc: RAW BOREHOLE WATER BH1520BH1 Collect From: BRIGHTON ROAD, LOWER BEEDING, HARSHAM RH13 6PS Order No: BH1520 Received Date: 09/05/2024 Tested Date: 09/05/2024 Sampling Date: 09/05/2024 11:00 Sample Type: GW : Ground Water Product: SS-DWREGS	255	**Ammonium (Ammonia and Ammonium Ions)**	**0.651**	**mg/l**	**<0.500**	F
		215	Chloride	24.78	mg/l	<250.00	
		245	Nitrate	<0.9	mg/l	<50.0	
		225	Nitrite	<0.004	mg/l	<0.500	
		calc	Nitrite/Nitrate	0.000	mg/l	<1.000	*
		305	Sulphate	67.6	mg/l	<250.0	
		205	Total Hardness	28.1	mg/l		
		230	Odour - Qualitative	None			*
		230	Odour - Quantitative	0			
		430	Colony Count 3 Days at 22°C	>300	cfu/ml		
		400	E coli	0	mpn/100ml	0	
		400	**Total Coliforms**	**1**	**mpn/100ml**	**0**	F
		660	Colour	<2	mg/l Pt/Co	<20	
		660	Conductivity	414	uS/cm		
		660	Hydrogen Ion (pH)	6.8	pH_unit	6.5 to 9.5	
		660	**Turbidity**	**47.000**	**NTU**	**<4.000**	F
		ext	Epichloroydrin	<0.1	µg / l	<0.10	*
		3401	Bromate	<0.8	µg / l	<10.0	
		390	**Enterococci**	**1**	**cfu/100ml**	**0**	F
		5413	Total Cyanide	<4.1	µg / l	<50.0	
		765	Mercury	<0.04	µg / l	<1.00	
		745	Antimony	0.3	µg / l	<5.0	
		745	Arsenic	1.7	µg / l	<10.0	
		745	Selenium	<0.8	µg / l	<10.0	
		740	Boron	0.219	mg/l	<1.000	
		740	Sodium	60.1	mg/l	<200.0	
		3371	Fluoride	0.182	mg/l	<1.500	
		3545	2,4,5-T	<0.007	µg / l	<0.100	
		3545	2,4-D	<0.007	µg / l	<0.100	
		3545	Bentazone	<0.007	µg / l	<0.100	
		3545	Bromoxynil	<0.007	µg / l	<0.100	

Disclaimers:

Unless otherwise stated, all results apply to the sample as received. Information provided by the customer (includes Date, Time, Sample Matrix & Sample Description) can affect the validity of the result.
Opinions and interpretations expressed in this report are outside the scope of UKAS accreditation.
Details of Uncertainty of Measurement and Analytical Quality Control are available on request.
Where a statement of conformity to a Regulatory Standard or customer limit is provided, the uncertainty of measurement is not taken into account unless shown on the certificate.
*** - denotes non UKAS accredited test**
A result of 0 cfu denotes none found in volume analysed
F - Result Exceeds The Maximum Pcv As Defined In The Water Supply (Water Quality) (Amendment) Regulations 2018
ext - Analysis subcontracted to an external laboratory

UKAS
1579

This analytical report may not be reproduced, except in full, without the written approval of South East Water Scientific Services.

South East Water Ltd. Registered in England, No.2679874. Registered Office: Rocfort Road, Snodland, Kent ME6 5AH.

Certificate Number: 1248571-3 Final
Supercedes report 1248571-2

Order Number: BH1520

Lab Ref.	Sample Details	Method	Test	Result	Units	Limit	Flag
4761624	Continued from Page 1	3545	Dicamba	<0.020	µg / l	<0.100	
		3545	Dichlorprop	<0.003	µg / l	<0.100	
		3545	Fluroxypyr	<0.008	µg / l	<0.100	
		3545	MCPA	<0.008	µg / l	<0.100	
		3545	MCPB	<0.008	µg / l	<0.100	
		3545	Mecoprop (MCPP)	<0.005	µg / l	<0.100	
		3545	Triclopyr	<0.015	µg / l	<0.100	
		2587	Atrazine	<0.002	µg / l	<0.100	
		2587	Carbendazim	<0.001	µg / l	<0.100	
		2587	Carbetamide	<0.002	µg / l	<0.100	
		2587	Chlortoluron	<0.003	µg / l	<0.100	
		2587	Diuron	<0.004	µg / l	<0.100	
		2587	Epoxiconazole	<0.003	µg / l	<0.100	
		2587	Flutriafol	<0.003	µg / l	<0.100	
		2587	Isoproturon	<0.003	µg / l	<0.100	
		2587	Linuron	<0.003	µg / l	<0.100	
		2587	Oxadixyl	<0.003	µg / l	<0.100	
		2587	Pendimethalin	<0.007	µg / l	<0.100	
		2587	Prometryn	<0.002	µg / l	<0.100	
		2587	Propazine	<0.002	µg / l	<0.100	
		2587	Simazine	<0.003	µg / l	<0.100	
		2587	Terbutryn	<0.002	µg / l	<0.100	
		2587	Trietazine	<0.004	µg / l	<0.100	
		480	Benzo (a) pyrene	<0.003	µg / l	<0.010	
		480	Benzo(1,12)perylene	<0.003	µg / l		
		480	Benzo(11,12)fluoranthene	<0.003	µg / l		
		480	Benzo(3,4)fluoranthene	<0.003	µg / l		
		480	Indeno(1,2,3-cd)pyrene	<0.003	µg / l		
		calc	PAH Total	0.000	ug/l	<0.100	*
		775	1,1,1 Trichloroethane	<0.60	µg / l		
		775	1,2-Dichloroethane	<0.12	µg / l	<3.00	
		775	Benzene	<0.02	µg / l	<1.00	
		775	Dibromochloromethane	<0.50	µg / l		
		775	Dichlorobromomethane	<0.43	µg / l		
		775	Tetrachloroethene	<0.15	µg / l	<10.00	
		calc	Tetrachloroethene/Trichloroethene- Sum	0.00	µg / l		*
		775	Tetrachloromethane	<0.11	µg / l	<3.00	
		calc	Total Trihalomethanes	0.00	µg / l	<100.00	*
		775	Tribromomethane	<0.60	µg / l		
		775	Trichloroethene	<0.10	µg / l	<10.00	
		775	Trichloromethane	<0.50	µg / l		
		730	Aluminium	121.5	µg / l	<200.0	
		730	**Iron**	**5244.7**	**µg / l**	**<200.0**	F
		730	**Manganese**	**610.5**	**µg / l**	**<50.0**	F
		735	Cadmium	<0.12	µg / l	<5.00	

Disclaimers:

Unless otherwise stated, all results apply to the sample as received. Information provided by the customer (includes Date, Time, Sample Matrix & Sample Description) can affect the validity of the result.
Opinions and interpretations expressed in this report are outside the scope of UKAS accreditation.
Details of Uncertainty of Measurement and Analytical Quality Control are available on request.
Where a statement of conformity to a Regulatory Standard or customer limit is provided, the uncertainty of measurement is not taken into account unless shown on the certificate.
*** - denotes non UKAS accredited test**
A result of 0 cfu denotes none found in volume analysed
F - Result Exceeds The Maximum Pcv As Defined In The Water Supply (Water Quality) (Amendment) Regulations 2018
ext - Analysis subcontracted to an external laboratory

UKAS
1579

The analytical report may not be reproduced, except in full, without the written approval of South East Water Scientific Services.

South East Water Ltd. Registered in England, No.2679874. Registered Office: Rochet Road, Snodland, Kent ME6 5AH.

NICHOLLS WATER CREDITS

Certificate Number: 1248571-3 Final
Supercedes report 1248571-2

Order Number: BH1520

Lab Ref.	Sample Details	Method	Test	Result	Units	Limit	Flag
4761624	Continued from Page 2	735	Chromium	<0.5	µg / l	<50.0	
		730	First Draw Copper	<0.009	mg/l	<2.000	
		730	First Draw Lead	<0.9	µg / l	<10.0	
		730	First Draw Nickel	<0.9	µg / l	<20.0	
		360	Clostridium perfringens (including spore	0	cfu/100ml	0	
		calc	Pesticides - Total Substances	0.000	ug/l		*
		4170	Aldrin	<0.007	µg / l	<0.030	
		4170	Dichlobenil	<0.006	µg / l	<0.100	
		4170	Dieldrin	<0.007	µg / l	<0.030	
		4170	Gamma-HCH (Lindane)	<0.005	µg / l	<0.100	
		4170	Heptachlor	<0.008	µg / l	<0.030	
		4170	Heptachlor Epoxide	<0.005	µg / l	<0.030	
		4170	Propyzamide	<0.005	µg / l	<0.100	
		4170	Tri-allate	<0.005	µg / l	<0.100	
		295	Gross Alpha	<0.02	Bq/l	<0.10	
		295	Gross Beta	<0.28	Bq/l	<1.00	
		5374	Tritium	<8.5	Bq/l	<100.0	
		740	Magnesium	7.6	mg/l		
		730	Iron (Free)	<7.3	µg / l		
		ext	Vinyl Chloride	<0.113	µg / l	<0.500	
		ext	Acrylamide	<0.008	µg / l	<0.100	

Job number changed as requested

[redacted]

Richard Brown

Laboratory Manager

Disclaimers:

Unless otherwise stated, all results apply to the sample as received. Information provided by the customer (includes Date, Time, Sample Matrix & Sample Description) can affect the validity of the result.
Opinions and interpretations expressed in this report are outside the scope of UKAS accreditation.
Details of Uncertainty of Measurement and Analytical Quality Control are available on request.
Where a statement of conformity to a Regulatory Standard or customer limit is provided, the uncertainty of measurement is not taken into account unless shown on the certificate.
*** - denotes non UKAS accredited test**
A result of 0 cfu denotes none found in volume analysed
F - Result Exceeds The Maximum Pcv As Defined In The Water Supply (Water Quality) (Amendment) Regulations 2018
ext - Analysis subcontracted to an external laboratory

UKAS TESTING 1579

This analytical report may not be reproduced, except in full, without the written approval of South East Water Scientific Services.

South East Water Ltd. Registered in England, No.2679874. Registered Office: Rochfort Road, Snodland, Kent ME6 5AH.

APPENDIX G – MAINTENANCE ROUTINE

BH1520 Bespoke Waterwell Annual Service Programme

Service Programme MAIN SERVICE

Full day service @ 2 x engineers
Resistance & insulation testing of borehole pump motor & cable
Check well heads
Inspection of controls & adjustment where necessary
Check flowrate & pressure and adjust as necessary
Control panel
Check operation
System controller
Check operation
Pressure vessel
Check pressure vessel settings
Adjust pressure as necessary
pH correction unit
Replace separate source valve service kit
Replace No Hard Water Bypass service kit
Replace clack head service kit
Change memory back up battery
Confirm all settings and times on the head are correct
Run forced re-gen to confirm correct operation of head and valves
Top up juraperle / corosex as needed
Check and record pH levels
Aeration storage tank
Fill aeration tank and flush
Clean bubblers in tank
Compressor
Change compressor service kit
Change compressor filter
Turbidex Unit
Replace separate source valve service kit
Replace No Hard Water Bypass service kit
Replace clack head service kit
Change memory back up battery
Confirm all settings and times on the head are correct
Run forced re-gen to confirm correct operation of head and valves
Filox iron filter unit
Replace separate source valve service kit
Replace No Hard Water Bypass service kit
Change clack head service kit
Change memory back up battery
Confirm all settings and times on the head are correct
Run forced re-gen to confirm correct operation of head and valves
Sodium hypochlorite flush
Check filox media levels and replace as necessary
Filox media will need full replacement every 5-7 years
CR200 Filter
Replace No Hard Water Bypass service kit
Change clack head service kit
Change memory back up battery
Confirm all settings and times on the head are correct
Check crystal right media, top up as necessary
Full media replacement required every 7-10 years
Brine tank
Check salt levels
Top up as necessary
Carbon filter
Replace separate source valve service kit
Replace No Hard Water Bypass service kit
Replace clack head service kit
Change memory back up battery
Confirm all settings and times on the head are correct
Check levels of activated carbon, top up as necessary
Change carbon filter
Ultraviolet System
Replace UV Lamp
Replace UV Quartz
Replace UV Seal Kit
Reset hour counter

Service Programme MAIN SERVICE

DAB Ezybox Booster Set
Check and clear stored error messages

Sediment filter
Replace filters

Chlorine Dosing Unit x 2
Check chlorine levels
Replace chlorine dosing service kits
Check operation
Refill reservoirs

Water storage tank
Check and clean as necessary

Mains Emergency Supply
Check operation of purge system
Check operation of MAV and clean diaphragm

General
Check plant room to ensure it is vermin proof
Dust / wipe down all plant units and equipment
Check water meters
Check all gate valves are back in correct position
Remove all rubbish and redundant parts
Confirm the presence of the WSP and EP
Remote checking of the Telemetry system
Ensure the service and maintenance records are up to date on completion of works

During the service, if any system components are found to be functioning incorrectly, we will make you aware of this, and discuss whether a repair can be undertaken, or a replacement unit is necessary. If any additional materials required are available at time of service, the Engineer will replace as necessary, and you will be invoiced separately.

Service Programme TANK CLEAN

TANK CLEAN
1 x full day @ 3 x engineers

During the tank clean, if any system components are found to be functioning incorrectly, we will make you aware of this, and discuss whether a repair can be undertaken, or a replacement unit is necessary. If any additional materials required are available at time of service, the Engineer will replace as necessary, and you will be invoiced separately.

APPENDIX H – SUGGESTED S106 OFFSETTING SITE OWNER OBLIGATIONS

The obligations below are based on current agreements being negotiated with HDC. These are to be negotiated between:

- the LPA
- the Site Owner (i.e. the owner of the land on which the Water Off-Setting Works are to be carried out ("the Water Neutrality Land")); and
- the Developer/Applicant, the owner of the Development Site the subject of the Application

Part 1

Schedule XX - The Site Owner's Covenants Restrictions and Obligations to the Council

The Site Owner covenants with the Council so as to bind its interest in the Water Neutrality Land to ensure that the following obligations in relation to the Water Neutrality Land are delivered for the lifetime of the Development as follows:

1. Subject to paragraph 2 below:
   1.1 to implement the Water Offsetting Solution on the Water Neutrality Land and provide written and/or photographic evidence to the Council demonstrating that the Water Offsetting Solution has been implemented and is operational prior to the Occupation of any Dwellings on the Development Site . The Council will acknowledge receipt of this evidence and, providing it is satisfactory, confirm in writing to the submitting party that this obligation has been met and is thereby discharged within 30 days of receipt. The Council's discharge of this obligation does not release the Site Owners from the other obligations set out in this schedule; The evidence will be deemed satisfactory providing it includes:
      (a) Photographs of the installed borehole, plant room, storage tank and pipework connecting the storage tank to the Site's distribution network.
      (b) Photographs of the borehole supply meter at the start and end of a five day period showing an average daily consumption equal to the amount specified in the Water Offsetting Solution.
      (c) Evidence of the Environmental Health Officer's approval that the borehole supply meets the required quality standard for potable water
   1.2 to manage and maintain and keep in good repair at all times the Water Offsetting Solution (subject to any minor amendments as may be agreed between the Site Owner and the Council in writing from time to time) for the lifetime of the implementation of the Planning Approval on the Development; and
   1.3 afford the Council (and its agent) access between the hours of 0900 and 1700 on a working day provided that the Council (or its agent) shall give the Site Owner not less than 72 hours' notice to the Site to inspect and assess whether or not the Water Offsetting Solution has been implemented on the Site and is being maintained in accordance with the Water Offsetting Solution provided always that:
      (a) the Council and its agent shall comply fully with the Site Owner's reasonable site rules and regulations applicable as at the time of access throughout the duration of such inspection and with health and safety legislation, policy and best practice; and
      (b) the Council and its agents shall at all times be accompanied by the Site Owner or its agent.
2. In the event that the Council approves in writing that the Water Offsetting Solution is no longer required to be delivered on the Site to achieve Water Neutrality then the obligations in relevant Schedule XX shall determine and cease to have legal effect and the Site shall no longer be bound by the terms of this deed.

Part 2

Schedule YY - The Developer's Obligations

1. The Developer covenants with the Council so as to bind its interest in the Development Site not to permit occupation of an individual dwelling until the on-site water neutrality measures as set out in the Water Neutrality Statement have been implemented in relation to that dwelling, i.e. the subject of the relevant occupation.
2. The Developer covenants with the Council so as to bind its interest in the Development Site not to permit occupation of an individual dwelling until the off-site water neutrality measures as set out in the Water Neutrality Statement have been implemented.

Groundwater Investigation Report – Offsetting Scheme

Site: South Lodge, Hotel and Spa, Brighton Road, Lower Beeding, Horsham RH13 6PS

SOUTH LODGE

Client: South Lodge Hotel and Spa

Report reference: BH1520 GWI Version: 1

Date: 19th August 2024

Co-author: George Parker – Project Manager Nicholls Boreholes

[redacted]

Co-author: Dr Stephen Buss MA MSc FGS CGeol – Consulting Hydrogeologist

[redacted].

Contents

1.0 Introduction 3
2.0 Water Neutrality and Conservation 3
3.0 Site Description 3
3.0 Exploratory Work and Water Quality Testing 4
3.1 Rotary Boreholes 4
4.0 Ground Conditions 5
Topsoil 5
Upper Tunbridge Wells Formation 5
Grinstead Clay Formation 5
4.1 Groundwater 6
4.2 Pumping Tests 6
5.0 Raw Borehole Water Quality Testing 6
6.0 Source Protection 7
7.0 Concept Design 7
8.0 Regulatory Compliance 9
8.1 Sampling and Testing Regime 9
8.2 Maintenance and Servicing 9
8.3 Record Keeping 9

Appendices

Appendix A Site location and borehole location plans
Appendix B Borehole logs
Appendix C Water quality analysis results
Appendix D Treatment plant concept design

1.0 Introduction

As part of the water offsetting scheme at South Lodge Hotel and Spa, Brighton Road, Lower Beeding, Horsham RH13 6PS (Appendix A.1) two boreholes are required to provide a duty standby regime for provision of the water supply to the spa. Nicholls Boreholes constructed and tested two abstraction water wells in April 2024 in accordance with EA consent number S/2024/340. Included within the GIC document, a monitoring borehole was required to be drilled in order monitor the influence on groundwater when pumping of the 2 abstraction wells at 2 water sources of interest, c. 250m South-East of the abstraction wells.

Prior to the EA abstraction and the water usage can switch wholly away from mains.

This report describes the site works and includes the results of water quality testing. A factual report was requested by the local authority, Horsham Borough Council, to support the planning application.

2.0 Water Neutrality and Conservation

Lower Beeding is in the catchment of the River Adur, on the southern slope of a broad hill that is formed out of the Tunbridge Wells Sand Formation outcrop. The northern part of the hill, which is in the catchment of the River Arun, is at least 1.9 km distant from the abstraction boreholes. This location is not in the Hardham Basin (Folkestone Beds) or the Chichester and Worthing Chalk.

Being 1.9 km distant from the River Arun catchment means that there is no feasible hydrogeological linkage between the abstraction and the River Arun. Therefore, abstraction will not also take water from the Arun Valley habitat sites, or any river catchment that serves the Arun Valley basin.

The closest conservations sites are 3.7 km to the north of the boreholes: St. Leonard's Forest SSSI. This is so far from the site that it is not feasible that there would be an impact on the conservation site.

3.0 Site Description

A summary description of the site and its general setting is as follows. The site address is South Lodge, Hotel and Spa, Horsham RH13 6PS. The immediate environs of the boreholes are the hotel’s car park, with woodland to the north. The ground around each borehole is fairly flat and level, but overall slopes southwards.

The current site features are shown on the site plan included in Appendix A.1.

3.0 Exploratory Work and Water Quality Testing

All of the Nicholls Boreholes lead drillers are NVQ Level 2 Land Drilling accredited, which is a nationally recognised qualification promoted and run by the British Drilling Association. Nicholls is also a member of the Water Reg UK advisory body.

3.1 Rotary Boreholes

Two abstraction boreholes and one monitoring borehole were constructed in accordance with the instructions on Environment Agency consent number S/2024/340 using rotary flush technique.

Abstraction Borehole 1

Location:	TQ 21748 25498
Ground level:	71.7 m AOD (from Environment Agency LIDAR data)
Drilling date:	04-04-2024 to 11-04-2024
Construction details:	Rotary technique with recirculating mud flush. Drilled at 300mm diameter to a depth of 36m, with 200mm solid steel casing lined to 36m. Drilled at 200mm diameter to a depth of 62m. Slotted 125mm UPVC liner was installed from 61m to 35.25m and solid 125mm UPVC liner was installed from 35.25m to ground level.

Abstraction Borehole 2

Location:	TQ 21665 25459
Ground level:	68.6 m AOD (from Environment Agency LIDAR data)
Drilling date:	16-04-2024 to 18-04-2024
Construction details:	Rotary technique with recirculating mud flush. Drilled at 300mm diameter to a depth of 30m, with 200mm solid steel casing lined to 30m. Drilled at 200mm diameter to a depth of 62m. Slotted 125mm UPVC liner was installed from 61m to 32.5m and solid 125mm UPVC liner was installed from 32.5m to ground level.

Monitoring Borehole

Location:	TQ 21799 25264
Ground level:	55.5 m AOD (from Environment Agency LIDAR data)
Drilling date:	30-04-2024
Construction details:	Rotary technique with recirculating mud flush. Drilled at 100mm diameter to a depth of 15m. Borehole lined with 75mm slotted liner from 15m to 1m. Solid 75mm UPVC liner was installed from 1m to ground level.

4.0 Ground Conditions

Published BGS information (1:50 000 scale maps) indicates that the site is underlain by the Upper Tunbridge Wells formation consisting primarily of sandstone and mudstones. Underlying this is the Grinstead Clay formation. This was confirmed when drilling, although the sandstones were not identified as a discrete layer. The strata encountered are summarised below.

Topsoil

At both boreholes 1 and 2 topsoil comprised c. 0.5 m of medium soft, moist light brown organic silty clay and frequent roots and rootlets. At the monitoring borehole topsoil compromised c. 1.5 m of medium soft, yellow brown clay with interstitial mudstone.

Upper Tunbridge Wells Formation

This stratum was encountered through from 0.5m to 61m in both of the abstraction boreholes, and to 15 m in the observation borehole.

In general, the Tunbridge Wells Formation was found to comprise dominantly clay layers, and mudstone layers, with various degrees of silt as part of the rock matrix and as interbeds.

Grinstead Clay Formation

At 62m in boreholes 1 and 2 Grinstead Clay was encountered as a firm pale grey silty clay. Drilling was stopped at this geology change and the boreholes were backfilled 1 m with bentonite pellets.

4.1 Groundwater

Groundwater observations were not made during drilling as the use of mud flush obscures water strikes. Subsequent groundwater level observations, around the time of pumping tests are tabulated below.

	BH1	BH2	Monitoring BH
Borehole datum elevation	71.7 m AOD	68.6 m AOD	55.5 m AOD
April 2024	21.9 m // *49.80 m AOD*	19.7 m // *48.90 m AOD*	*no data, not completed in this time*
May 2024	22.12 m // *49.58 m AOD*	19.65m // 48.95 m AOD	6.5 m // *49.0 m AOD*
August 2024	22.64 m // *49.06 m AOD*	20.31 m // 48.29 *m AOD*	6.5 m // *49.0 m AOD*

4.2 Pumping Tests

Stephen Buss Environmental Consulting (2024) reviewed pumping test data from borehole BH1, which was tested between 7 and 9 May 2024. The borehole was shown to be easily capable of maintaining an abstraction rate of 20 m^3/day. The conclusion of the assessment was that the borehole would be capable of maintaining that rate in the long term, even when considering seasonal fluctuation.

5.0 Raw Borehole Water Quality Testing

A Group A+B water sample was taken from BH1 on 9th May 2024, BH 2 will be sampled during the EA summer testing window.

BH1 Water samples were collected from the base of the well at pump depth on the 9th May 2024 after a period of over 3 hours of continuous running to ensure a representative sample. These were collected and stored in a refrigerated container and shipped straight to the SE Water Scientific Services lab in Farnborough. The report was produced on the 30th May 2025.

Water samples were taken by a Nicholls engineer certified by CATG to sample boreholes according to the DWI certification of persons scheme. This means that: samples are representative of the water at the sampling point at the time of sampling (the boreholes were purged a minimum three hours before sampling), that samples are not contaminated in the course of being taken; and that samples are kept at such a temperature and in such

condition as will secure that there is no material change in what is to be measured, and analysed without delay.

Water samples were analysed by South East Water Scientific Services, which is a UKAS accredited lab (as shown on the lab certificates in Appendix C). When results shown in Appendix C are compared with the standards in Schedule 1 of the Private Water Supplies (England) Regulations (2016), elevated concentrations of iron, manganese, ammonium, turbidity and coliforms (including enterococci) were apparent.

NB - The bacterium level, is likely to come from the development pump installation process rather than within the well itself because it is seen at such a low concentration. Whilst all our equipment is sanitised prior to each installation, we cannot guarantee low levels of bacteria influencing the results.

6.0 Source Protection

Development of a water supply borehole leads to the creation of a default 50 m radius source protection zone (SPZ). Appendix D shows the 50 m radii over Google Earth imagery from March 2022, with land ownership boundaries from August 2024.

This image shows that the area is mostly woodland around BH2, and to the north of BH1, with parking to the south of BH1 and east of BH2. The parking area is gravel over clayey bedrock and slopes southwards: ground level falls 3 m over the parking area.

Most (87%) of the land within the SPZ is owned by the hotel owner, currently Exclusive Hotels Group. The strip of land to the north of the hotel is a gravel driveway to a private dwelling which also holds a public right of way.

Activities that are prohibited within a SPZ1 are potentially very polluting such as landfilling, construction of filling stations or chemical works etc. none of which are anticipated in this environment. Normal domestic activities are not prohibited within a SPZ1. The construction of SUDS soakaways, for instance, is not prohibited; though unless they are for rainwater only a risk assessment should be submitted to the Environment Agency.

Full details of the activities that are and are not permitted are contained within the Environment Agency's groundwater protection position statements (www.gov.uk/government/publications/groundwater-protection-position-statements) and are frequently updated. These restrictions will be included in the O&M manual for the treatment works. When the abstraction is licensed the Environment Agency will be able to regulate development within the SPZ.

7.0 Concept Design

The filtration system as designed below, will use 20 m^3 per day supplied from the borehole before switching to the mains supply to meet the remainder of the hotel's daily requirements.

This switch of supply has been designed to be compliant with Category 5 regulations. Furthermore, the system is designed to accommodate the higher volume 83 m^3 daily demand once the EA license has been granted. Using the design in appendix D you can follow the flow of water through the system with the text below.

- The pH correction unit will raise the pH of the water, to more effectively treat the parameters above the UK drinking limit.
- The water then fills a contact tank, where both compressed air and chlorine are added. This process will drop the Manganese out of solution in order for it to be filtered more easily later in the system. The chlorination of the water will also convert the Ammonium into chloramines, which will be filtered out later in the process.
- The water is then passed through a turbidity filter to remove particulate, including FEIII iron.
- The water will then pass through an Iron filter unit to reduce the iron content of the water below the UK drinking limit.
- The water then passes through a polishing unit in order to reduce the manganese levels below the UK drinking limit, having pre-treated the manganese in the second stage.
- The water will then pass through a carbon filter, which will remove excess chlorine and the chloramines formed as the by product in the aeration tank.
- The water will be passed through a UV filter in order to kill bacteria including cryptosporidium, before it is passed into a tank.
- The water will then enter the storage tank. A chlorine dosing unit will cycle water through a separate line monitoring chlorine concentration in the water. This dosing unit will maintain a set chlorine level in order to kill the bacteria in the tank and ensure free chlorine levels are kept to the required volume.
- The multistage booster set shown is an existing pump set in the plant room of the hotel, and therefore is sized appropriately. The new filtration system will be plumbed into this existing network.
- Post booster, the water passes through a high flow sediment filter, which will ensure that any sediment that remains in the water after the filtration process or picked up from the tank, is reduced below the UK limit. The water is then distributed through the network.
- Telemetry – throughout the system telemetry links to all the filtration and treatment stages. The telemetry system will input a level of automatic control on the system. Additionally, the telemetry will be monitored remotely, allowing easy diagnostics and system amendments as well as warnings which could help pre-empt potential maintenance requirements.
- The water storage tank will have a CAT 5 complaint turret which will provide an emergency mains backup supply, should there be a system outage or failure within the filtration, ensuring the hotel maintains an adequate supply of water.

8.0 Regulatory Compliance

8.1 Sampling and Testing Regime

In accordance with the Private Water Supplies (England) Regulations 2016 Regulation 9, for which the hotel falls under, monitoring of the parameters will be as listed in Part 1 of schedule 1, analysed twice per year, and monitoring of parameters in part 2 of schedule 1, analysed twice per year. Sampling over the requirements of Part 1 and 2 of Schedule 1 will additionally be carried out as outlined in the local authority risk assessment at the specified intervals. The contaminants that have already been analysed in excess of the standards (as laid out in Schedule C.1) are included within Part 1 of schedule and as such will be sampled twice per year.

In the case of a failure to any of the parameters the Hotel will be supplied with mains water through the compliant mains water backup built into the filtration system. This will ensure that the hotel will maintain a wholesome supply. Once the mains supply has been implicated, the hotel will engage with a competent organization to carry out a full investigation into the cause of the failure and rectify the cause. The outcome of the investigation will ultimately dictate the additional required monitoring and potential maintenance that will be implemented on to area of the system deemed to have failed. Full details of the investigation procedure will be provided within the Water Safety Plan.

8.2 Maintenance and Servicing

Servicing will be required at quarterly intervals throughout the year to ensure the system is maintained to continue to deliver a wholesome supply at all times. In addition to the maintenance, regular visual inspections will be carried out in accordance with the stipulations from the local authority. Servicing arrangements will also include any additional requirements as identified as by the local authority.

Full details of the servicing will be provided within the Water Safety Plan.

In the event of equipment failure, a stock of replacement parts will be kept within the plant room to ensure that the supply can be re-initiated as soon as possible. In the event that the supply from the boreholes is interrupted, the mains backup will be implemented to ensure a wholesome supply to the hotel. Full details of the equipment failure procedure will be provided within the Water Safety Plan.

8.3 Record Keeping

Servicing and sampling records will be completed after each service and a hard copy of these will be kept in the plant room within the Water Safety Plan, with a digital copy being provided to the hotel and retained by the service provider. Full details of the required record keeping will be provided in the Water Safety Plan.

APPENDIX A.1



APPENDIX B.1

Borehole record form

NICHOLLS BOREHOLES & GROUND SOURCE

British Geological Survey
NATURAL ENVIRONMENT RESEARCH COUNCIL

Environment Agency

Water Resources Act 1991 (as amended by the Water Act 2003)

A Site details

Borehole drilled for: South Lodge Hotel and Spa

Location: Brighton Road, Lower Beeding, Horsham, RH13 6PS

NGR (ten digits): TQ21748 25498 Please attach site plan

Ground level (if known): metres Above Ordnance Datum

Drilling company: Nicholls Boreholes

Date drilling commenced: 11/04/2024 (DD/MM/YYYY) Completed: 17/04/2024 (DD/MM/YYYY)

B Construction details

Borehole datum (if not ground level): metres (m). Please tick if this is above ☐ or below ☐ ground level.
(point from which all measurements of depth are taken, for example, flange, edge of chamber)

Borehole drilled diameter	300	mm from	0	to	36	m/depth
	200	mm from	36	to	62	m/depth
		mm from		to		m/depth
		mm from		to		m/depth

Casing material	Steel	diameter	200	mm from	0	to	36 m/depth

and type (for example, if plain steel, plastic slotted). Please record permanent casing details, not temporary casing.

Casing material	Solid UPVC	diameter	125	mm from	0	to	35.35 m/depth
Casing material	Slotted UPVC	diameter	125	mm from	35.25	to	61 m/depth
Casing material		diameter		mm from		to	m/depth

Grouting details: 68 bags of washed shingled, 20 bags of mikolit seal

Water struck at 1. m (depth below datum – mbd) 2. m (mbd)
3. m (mbd) 4. m (mbd)

C Test pumping summary (Please supply full details on form WR39)

Test pumping datum (if different from borehole datum): m. Please tick if this is above ☐ or below ☐ ground level.

Pump suction depth: mbd

Water level (start of test): mbd

Water level (end of test): mbd

Type of test (for example, bailer, step, constant rate):

Pumping rate: m^3/hour ☐ or litres/second ☐. Please tick as appropriate.
for days, hours, mins

Recovery to mbd in days, hours, mins
(from end of pumping)

Date(s) of measurements Pump started (DD/MM/YYYY)
Pump stopped (DD/MM/YYYY)

Please supply chemical analysis if available. If you have included this please tick this box ☐

NICHOLLS
BOREHOLES & GROUND SOURCE

APPENDIX B.1 cont'd

Project				BOREHOLE No
South Lodge Hotel				1a
Job No	Date	Ground Level (m)	Co-Ordinates ()	
AL162 / BH1520	11-04-24 15-04-24			
Contractor				Sheet
Nicholls				1 of 1

SAMPLES & TESTS			Water	STRATA				Geology	Instrument/ Backfill
Depth	Type No	Test Result		Reduced Level	Legend	Depth (Thickness)	DESCRIPTION		
						0.50	TOP SOIL: Medium soft very moist light brown organic silty CLAY. Frequent roots and rootlets.		
						2.00	Medium firm brown very clayey silty MUDSTONE.		
						(5.00)	Medium firm dark yellow brown very clayey MUDSTONE.		
						7.00	Firm light blue silty CLAY and reddish brown MUDSTONE.		
						(11.00)			
						18.00	Firm dark brown red silty MUDSTONE.		
						(16.00)			
						34.00			
						36.00	Firm light blue silty CLAY with mudstone.		
			▼			(25.00)	Firm light blue grey silty CLAY with mudstone.		
						61.00			
						62.00	Firm pale grey silty CLAY (Grinstead clay)		

Boring Progress and Water Observations						Chiselling			Water Added		GENERAL REMARKS
Date	Time	Depth	Casing Depth	Casing Dia. mm	Water Dpt	From	To	Hours	From	To	
											Service avoidence procedure followed. Rotary open hole No visual or olfactory sings of contamination.

All dimensions in metres Scale 1:393.75	Client South Lodge Hotel	Method/ Plant Used Massenza	Logged By SP

NICHOLLS
BOREHOLES & GROUND SOURCE

APPENDIX B.2

Borehole record form

NICHOLLS BOREHOLES & GROUND SOURCE

British Geological Survey
NATURAL ENVIRONMENT RESEARCH COUNCIL

Environment Agency

Water Resources Act 1991 (as amended by the Water Act 2003)

A Site details

Borehole drilled for: South Lodge Hotel and Spa

Location: Brighton Road, Lower Beeding, Horsham, RH13 6PS

NGR (ten digits): TQ21665 25459 Please attach site plan

Ground level (if known): metres Above Ordnance Datum

Drilling company: Nicholls Boreholes

Date drilling commenced: 18/04/2024 (DD/MM/YYYY) Completed: 22/04/2024 (DD/MM/YYYY)

B Construction details

Borehole datum (if not ground level): metres (m). Please tick if this is above ☐ or below ☐ ground level.
(point from which all measurements of depth are taken, for example, flange, edge of chamber)

Borehole drilled diameter

300	mm from	0	to	30 m/depth
200	mm from	30	to	62 m/depth
	mm from		to	m/depth
	mm from		to	m/depth

Casing material: Steel diameter: 200 mm from: 0 to: 30 m/depth
and type (for example, if plain steel, plastic slotted). Please record permanent casing details, not temporary casing.

Casing material: Solid UPVC diameter: 125 mm from: 0 to: 32.5 m/depth

Casing material: Slotted UPVC diameter: 125 mm from: 32.5 to: 61 m/depth

Casing material: diameter: mm from: to: m/depth

Grouting details: 54 bags of washed shingled, 17 bags of mikolit seal

Water struck at 1. m (depth below datum – mbd) 2. m (mbd)
3. m (mbd) 4. m (mbd)

C Test pumping summary (Please supply full details on form WR39)

Test pumping datum (if different from borehole datum): m. Please tick if this is above ☐ or below ☐ ground level.

Pump suction depth: mbd

Water level (start of test): mbd

Water level (end of test): mbd

Type of test (for example, bailer, step, constant rate):

Pumping rate: m^3/hour ☐ or litres/second ☐. Please tick as appropriate.

for: days, hours, mins

Recovery to mbd in days, hours, mins
(from end of pumping)

Date(s) of measurements: Pump started (DD/MM/YYYY)
Pump stopped (DD/MM/YYYY)

Please supply chemical analysis if available. If you have included this please tick this box ☐

NICHOLLS
BOREHOLES & GROUND SOURCE

APPENDIX B.2 cont'd

Project				BOREHOLE No
South Lodge Hotel				2
Job No	Date	Ground Level (m)	Co-Ordinates ()	
AL162 / BH1520	16-04-24 18-04-24	TQ 21666 25470		
Contractor				Sheet
Nicholls				1 of 2

SAMPLES & TESTS			Water	STRATA				Geology	Instrument/ Backfill
Depth	Type No	Test Result		Reduced Level	Legend	Depth (Thick-ness)	DESCRIPTION		
						0.50	TOP SOIL: Medium soft very moist light brown orange organic friable silty CLAY. Frequent roots and rootlets.		
						(6.00)	Medium firm dark yellow very clayey MUDSTONE.		
						6.50			
						(11.00)	Medium firm light blue grey silty CLAY and reddish brown MUDSTONE.		
						17.50			
						(12.50)	Firm dark brown reddish silty MUDSTONE with interstitial ferrous staining.		
						30.00			
						(20.00)	Medium firm grey silty MUDSTONE.		
						50.00			
						(12.00)	Firm light blue silty CLAY and MUDSTONE.		
						61.00			
						62.00	Firm pale grey silty CLAY (Grinstead clay)		

Boring Progress and Water Observations						Chiselling			Water Added		GENERAL REMARKS
Date	Time	Depth	Casing Depth	Casing Dia. mm	Water Dpt	From	To	Hours	From	To	Service avoidence procedure followed. Rotary open hole No visual or olfactory sings of contamination.

All dimensions in metres Scale 1:393.75	Client South Lodge Hotel	Method/ Plant Used Massenza	Logged By MC

APPENDIX B.3

WR38: Borehole record form

Borehole record form

NICHOLLS BOREHOLES & GROUND SOURCE

British Geological Survey
NATURAL ENVIRONMENT RESEARCH COUNCIL

Environment Agency

Water Resources Act 1991 (as amended by the Water Act 2003)

A Site details

Borehole drilled for: South Lodge Hotel

Location: BRIGHTON ROAD, LOWER BEEDING, WEST SUSSEX RH13 6PS

NGR (ten digits): TQ 21799 25264 Please attach site plan

Ground level (if known): 59 metres Above Ordnance Datum

Drilling company: NICHOLLS BOREHOLES

Date drilling commenced: 30/04/2024 (DD/MM/YYYY) Completed: 30/04/2024 (DD/MM/YYYY)

B Construction details

Borehole datum (if not ground level) _____ metres (m). Please tick if this is above ☐ or below ☐ ground level.
(point from which all measurements of depth are taken, for example, flange, edge of chamber)

Borehole drilled diameter	100	mm from	0	to	15 m/depth
		mm from		to	m/depth
		mm from		to	m/depth
		mm from		to	m/depth

Casing material and type (for example, if plain steel, plastic slotted). Please record permanent casing details, not temporary casing.	Solid uPVC	diameter 75	mm from	0	to 1	m/depth
Casing material	Slotted uPVC	diameter 75	mm from	1	to 15	m/depth
Casing material		diameter	mm from		to	m/depth
Casing material		diameter	mm from		to	m/depth

Grouting details: 15 bags of shingle, 6 bags of mikolit. Drilled with mud

Water struck at 1. 13.7 m (depth below datum – mbd) 2. _____ m (mbd)
3. _____ m (mbd) 4. _____ m (mbd)

C Test pumping summary (Please supply full details on form WR39)

Test pumping datum (if different from borehole datum) _____ m. Please tick if this is above ☐ or below ☐ ground level.

Pump suction depth _____ mbd

Water level (start of test) _____ mbd

Water level (end of test) _____ mbd

Type of test (for example, bailer, step, constant rate)

Pumping rate _____ m^3/hour ☐ or litres/second ☐. Please tick as appropriate.
for _____ days, _____ hours, _____ mins

Recovery to _____ mbd in _____ days, _____ hours, _____ mins
(from end of pumping)

Date(s) of measurements Pump started _____ (DD/MM/YYYY)
Pump stopped _____ (DD/MM/YYYY)

Please supply chemical analysis if available. If you have included this please tick this box ☐

APPENDIX B.3 cont'd

WR38: Borehole record form

D Strata log

Geological classification (BGS only)	Description of strata	Thickness m	Depth (to base of strata) m
	yellow / brown clay with insterstitial mudstone	1.5	1.5
	light grey, soft, very fine sand / siltstone with brown mudstone	6.5	8
	medium grey siltstone with brown mudstone	2	10
	grey brown silty mudstone	5	15
	(continue on separate page if necessary)		
	Other comments (for example, gas encountered, saline water intercepted)		

NICHOLLS
BOREHOLES & GROUND SOURCE

APPENDIX C.1

South East Water Scientific Services
3 Columbus Drive, Farnborough
Hampshire, GU14 0NZ
E-Mail: sales@southeastwater.co.uk
Website: www.southeastwater.co.uk

south east water
scientific services

ANALYTICAL REPORT

NICHOLLS BOREHOLES
Brownings Barn
Glasshouse Lane
Kirdford
West Sussex
RH14 0LW

Certificate Number: 1248571-3 Final
Supercedes report 1248571-2

Order Number: BH1520

Collected From: BRIGHTON ROAD, LOWER BEEDING, HARSHAM RH13 6PS

Date Received: 09/05/2024 **Date Reported:** 30/05/2024

Lab Ref.	Sample Details	Method	Test	Result	Units	Limit	Flag
4761624	Desc: RAW BOREHOLE WATER BH1520BH1 Collect From: BRIGHTON ROAD, LOWER BEEDING, HARSHAM RH13 6PS Order No: BH1520 Received Date: 09/05/2024 Tested Date: 09/05/2024 Sampling Date: 09/05/2024 11:00 Sample Type: GW : Ground Water Product: SS-DWREGS	255	**Ammonium (Ammonia and Ammonium Ions)**	**0.651**	**mg/l**	**<0.500**	F
		215	Chloride	24.78	mg/l	<250.00	
		245	Nitrate	<0.9	mg/l	<50.0	
		225	Nitrite	<0.004	mg/l	<0.500	
		calc	Nitrite/Nitrate	0.000	mg/l	<1.000	*
		305	Sulphate	67.6	mg/l	<250.0	
		205	Total Hardness	28.1	mg/l		
		230	Odour - Qualitative	None			*
		230	Odour - Quantitative	0			
		430	Colony Count 3 Days at 22°C	>300	cfu/ml		
		400	E coli	0	mpn/100ml	0	
		400	**Total Coliforms**	**1**	**mpn/100ml**	**0**	F
		660	Colour	<2	mg/l Pt/Co	<20	
		660	Conductivity	414	uS/cm		
		660	Hydrogen Ion (pH)	6.8	pH_unit	6.5 to 9.5	
		660	**Turbidity**	**47.000**	**NTU**	**<4.000**	F
		ext	Epichloroydrin	<0.1	µg / l	<0.10	*
		3401	Bromate	<0.8	µg / l	<10.0	
		390	**Enterococci**	**1**	**cfu/100ml**	**0**	F
		5413	Total Cyanide	<4.1	µg / l	<50.0	
		765	Mercury	<0.04	µg / l	<1.00	
		745	Antimony	0.3	µg / l	<5.0	
		745	Arsenic	1.7	µg / l	<10.0	
		745	Selenium	<0.8	µg / l	<10.0	
		740	Boron	0.219	mg/l	<1.000	
		740	Sodium	60.1	mg/l	<200.0	
		3371	Fluoride	0.182	mg/l	<1.500	
		3545	2,4,5-T	<0.007	µg / l	<0.100	
		3545	2,4-D	<0.007	µg / l	<0.100	
		3545	Bentazone	<0.007	µg / l	<0.100	
		3545	Bromoxynil	<0.007	µg / l	<0.100	

Disclaimers:

Unless otherwise stated, all results apply to the sample as received. Information provided by the customer (includes Date, Time, Sample Matrix & Sample Description) can affect the validity of the result.
Opinions and interpretations expressed in this report are outside the scope of UKAS accreditation.
Details of Uncertainty of Measurement and Analytical Quality Control are available on request.
Where a statement of conformity to a Regulatory Standard or customer limit is provided, the uncertainty of measurement is not taken into account unless shown on the certificate.
*** - denotes non UKAS accredited test**
A result of 0 cfu denotes none found in volume analysed
F - Result Exceeds The Maximum Pcv As Defined In The Water Supply (Water Quality) (Amendment) Regulations 2018
ext - Analysis subcontracted to an external laboratory

UKAS TESTING
1579

This analytical report may not be reproduced, except in full, without the written approval of South East Water Scientific Services.

South East Water Ltd. Registered in England, No.2679874. Registered Office: Rochfort Road, Snodland, Kent ME6 5AH.

APPENDIX C.1 cont'd

Certificate Number: 1248571-3 Final
Supercedes report
1248571-2

Order Number: BH1520

Lab Ref.	Sample Details	Method	Test	Result	Units	Limit	Flag
4761624	Continued from Page 1	3545	Dicamba	<0.020	µg / l	<0.100	
		3545	Dichlorprop	<0.003	µg / l	<0.100	
		3545	Fluroxypyr	<0.008	µg / l	<0.100	
		3545	MCPA	<0.008	µg / l	<0.100	
		3545	MCPB	<0.008	µg / l	<0.100	
		3545	Mecoprop (MCPP)	<0.005	µg / l	<0.100	
		3545	Triclopyr	<0.015	µg / l	<0.100	
		2587	Atrazine	<0.002	µg / l	<0.100	
		2587	Carbendazim	<0.001	µg / l	<0.100	
		2587	Carbetamide	<0.002	µg / l	<0.100	
		2587	Chlortoluron	<0.003	µg / l	<0.100	
		2587	Diuron	<0.004	µg / l	<0.100	
		2587	Epoxiconazole	<0.003	µg / l	<0.100	
		2587	Flutriafol	<0.003	µg / l	<0.100	
		2587	Isoproturon	<0.003	µg / l	<0.100	
		2587	Linuron	<0.003	µg / l	<0.100	
		2587	Oxadixyl	<0.003	µg / l	<0.100	
		2587	Pendimethalin	<0.007	µg / l	<0.100	
		2587	Prometryn	<0.002	µg / l	<0.100	
		2587	Propazine	<0.002	µg / l	<0.100	
		2587	Simazine	<0.003	µg / l	<0.100	
		2587	Terbutryn	<0.002	µg / l	<0.100	
		2587	Trietazine	<0.004	µg / l	<0.100	
		480	Benzo (a) pyrene	<0.003	µg / l	<0.010	
		480	Benzo(1,12)perylene	<0.003	µg / l		
		480	Benzo(11,12)fluoranthene	<0.003	µg / l		
		480	Benzo(3,4)fluoranthene	<0.003	µg / l		
		480	Indeno(1,2,3-cd)pyrene	<0.003	µg / l		
		calc	PAH Total	0.000	ug/l	<0.100	*
		775	1,1,1 Trichloroethane	<0.60	µg / l		
		775	1,2-Dichloroethane	<0.12	µg / l	<3.00	
		775	Benzene	<0.02	µg / l	<1.00	
		775	Dibromochloromethane	<0.50	µg / l		
		775	Dichlorobromomethane	<0.43	µg / l		
		775	Tetrachloroethene	<0.15	µg / l	<10.00	
		calc	Tetrachloroethene/Trichloroethene- Sum	0.00	µg / l		*
		775	Tetrachloromethane	<0.11	µg / l	<3.00	
		calc	Total Trihalomethanes	0.00	µg / l	<100.00	*
		775	Tribromomethane	<0.60	µg / l		
		775	Trichloroethene	<0.10	µg / l	<10.00	
		775	Trichloromethane	<0.50	µg / l		
		730	Aluminium	121.5	µg / l	<200.0	
		730	**Iron**	**5244.7**	**µg / l**	**<200.0**	F
		730	**Manganese**	**610.5**	**µg / l**	**<50.0**	F
		735	Cadmium	<0.12	µg / l	<5.00	

Disclaimers:

Unless otherwise stated, all results apply to the sample as received. Information provided by the customer (includes Date, Time, Sample Matrix & Sample Description) can affect the validity of the result.
Opinions and interpretations expressed in this report are outside the scope of UKAS accreditation.
Details of Uncertainty of Measurement and Analytical Quality Control are available on request.
Where a statement of conformity to a Regulatory Standard or customer limit is provided, the uncertainty of measurement is not taken into account unless shown on the certificate.
*** - denotes non UKAS accredited test**
A result of 0 cfu denotes none found in volume analysed
F - Result Exceeds The Maximum Pcv As Defined In The Water Supply (Water Quality) (Amendment) Regulations 2018
ext - Analysis subcontracted to an external laboratory

UKAS
1579

This analytical report may not be reproduced, except in full, without the written approval of South East Water Scientific Services.

South East Water Ltd. Registered in England, No.2679874. Registered Office: Rochfort Road, Snodland, Kent ME6 5AH.

NICHOLLS
BOREHOLES & GROUND SOURCE

APPENDIX C.1 cont'd

Certificate Number: 1248571-3 Final
Supercedes report
1248571-2

Order Number: BH1520

Lab Ref.	Sample Details	Method	Test	Result	Units	Limit	Flag
4761624	Continued from Page 2	735	Chromium	<0.5	µg / l	<50.0	
		730	First Draw Copper	<0.009	mg/l	<2.000	
		730	First Draw Lead	<0.9	µg / l	<10.0	
		730	First Draw Nickel	<0.9	µg / l	<20.0	
		360	Clostridium perfringens (including spore	0	cfu/100ml	0	
		calc	Pesticides - Total Substances	0.000	ug/l		*
		4170	Aldrin	<0.007	µg / l	<0.030	
		4170	Dichlobenil	<0.006	µg / l	<0.100	
		4170	Dieldrin	<0.007	µg / l	<0.030	
		4170	Gamma-HCH (Lindane)	<0.005	µg / l	<0.100	
		4170	Heptachlor	<0.008	µg / l	<0.030	
		4170	Heptachlor Epoxide	<0.005	µg / l	<0.030	
		4170	Propyzamide	<0.005	µg / l	<0.100	
		4170	Tri-allate	<0.005	µg / l	<0.100	
		295	Gross Alpha	<0.02	Bq/l	<0.10	
		295	Gross Beta	<0.28	Bq/l	<1.00	
		5374	Tritium	<8.5	Bq/l	<100.0	
		740	Magnesium	7.6	mg/l		
		730	Iron (Free)	<7.3	µg / l		
		ext	Vinyl Chloride	<0.113	µg / l	<0.500	
		ext	Acrylamide	<0.008	µg / l	<0.100	

Job number changed as requested

[redacted]

Richard Brown

Laboratory Manager

Disclaimers:

Unless otherwise stated, all results apply to the sample as received. Information provided by the customer (includes Date, Time, Sample Matrix & Sample Description) can affect the validity of the result.
Opinions and interpretations expressed in this report are outside the scope of UKAS accreditation.
Details of Uncertainty of Measurement and Analytical Quality Control are available on request.
Where a statement of conformity to a Regulatory Standard or customer limit is provided, the uncertainty of measurement is not taken into account unless shown on the certificate.
*** - denotes non UKAS accredited test**
A result of 0 cfu denotes none found in volume analysed
F - Result Exceeds The Maximum Pcv As Defined In The Water Supply (Water Quality) (Amendment) Regulations 2018
ext - Analysis subcontracted to an external laboratory

UKAS TESTING
1579

This analytical report may not be reproduced, except in full, without the written approval of South East Water Scientific Services.

APPENDIX D



Source protection zone 1 boundaries in red. Land ownership boundaries in white.

APPENDIX E.1

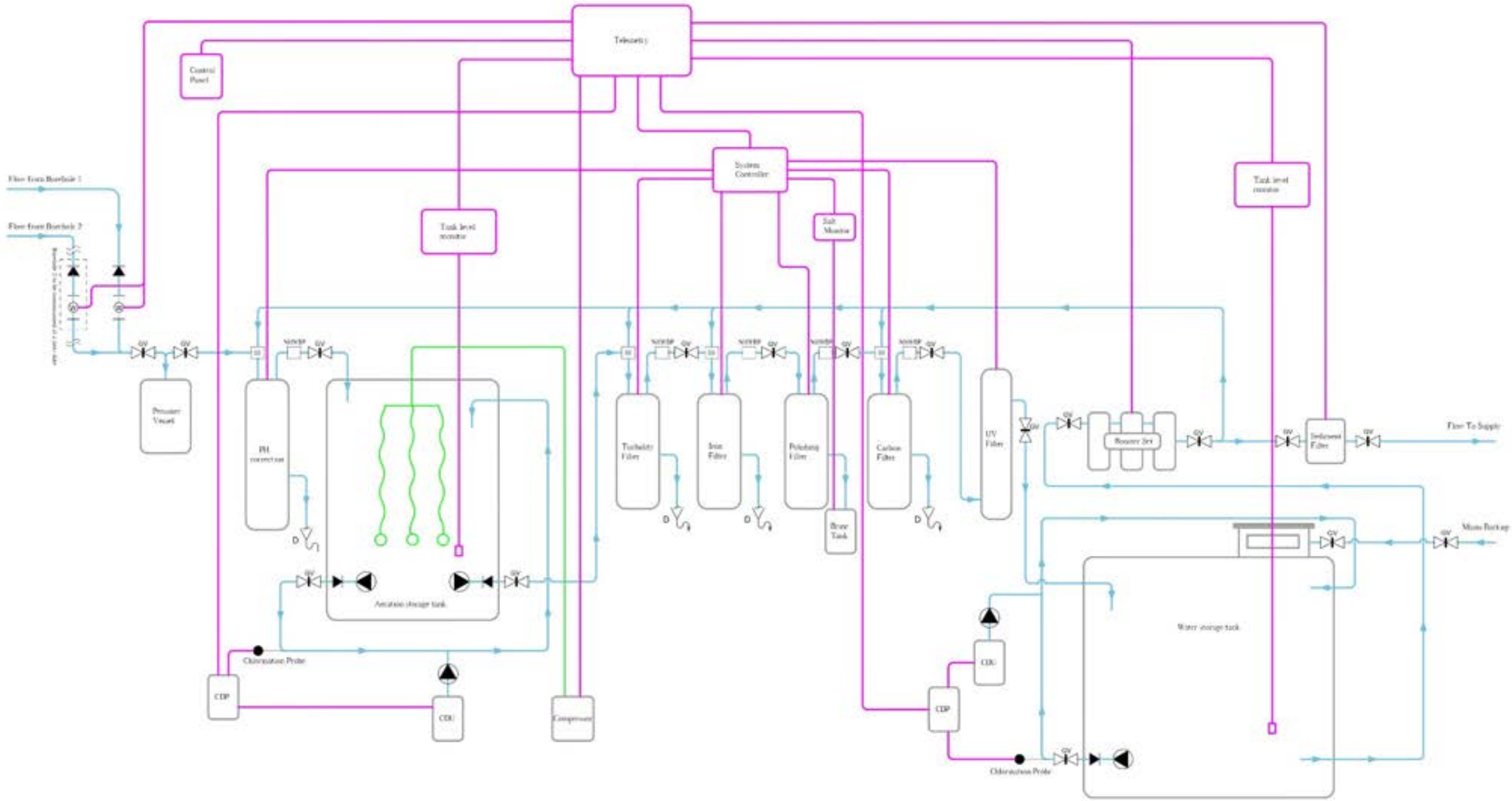

	Pump	GV	Gate valve
D	Flow to drain	NRVBP	No hand wave bypass
W	Water meter	SS	Separate source
	Non return valve	CDU -	Chlorine dosing unit
CDP	Chlorine dosing panel		

General Notes

Labour Division
Unless otherwise specified in Nicholls Bill of Quantities, all ground work, brick / block work and back filling of holes and trenches are to be priced and completed by others.
All pipe work and tanks are to be back filled with clean shingle to prevent damage to pipes.

Mains Power
Unless otherwise stated, mains power is to be provided to a IP56 Rated junction box with isolation switch at or near the plant room/borehole. All electrical connections to the mains supply as well as outlets are to be priced and completed by a qualified electrician. By others.

Water
Untreated borehole water is a category 5 supply and may harbour pathogens. A break gap of 30mm with header tank is required between the incoming mains and incomming borehole supplies.
See http://www.wras.co.uk/ for more information.

Surface Water
Unless otherwise stated and agreed all well covers will be raised to prevent surface contamination. In some circumstances recessed covers would be acceptable but clients will need to be made aware of the risks involved.

Contractors Responsibility
It is the contractors/Clients responsibility to protect from damage any and all bespoke components installed on site by Nicholls.

Clients Responsibility
It is the clients responsibility to monitor usage and any filter equipment. This is to ensure there has been no damage by others during the surrounding works by others. Nicholls cannot be held liable for any cost incurred from damage caused by others.

Notes:

Title:	BH1420 High Level Design		
Client:	South Lodge Hotel		
Date:	16/05/2024		
Revision:	Rev000	Sheet:	1 of 1

Drawn:	Mr Adam Hardiman
Checked:	Mr George Parker

Indicative layout for design purposes only. Final position to be confirmed on site. Drawing is not to be scaled.

NICHOLLS

Date: 31 July 2024
Our ref: 482409
Your ref: DC/23/0290

Customer Services
Hornbeam House
Crewe Business Park
Electra Way
Crewe
Cheshire
CW1 6GJ

T 0300 060 3900

Horsham District Council
Parkside
Chart Way
Horsham
West Sussex
RH12 1RL

BY EMAIL ONLY

Dear Mr Holbrook,

Planning consultation: Reserved matters application for the erection of up to 62 residential units and the creation of a new vehicle access following approval of outline application DC/19/2015 relating to appearance, landscaping, layout, scale and associated works.
Location: Land Parcel North of Downsview Avenue, Storrington, West Sussex.

Thank you for your consultation on the above dated 15 July 2024 which was received by Natural England on the same date.

Natural England is a non-departmental public body. Our statutory purpose is to ensure that the natural environment is conserved, enhanced, and managed for the benefit of present and future generations, thereby contributing to sustainable development.

SUMMARY OF NATURAL ENGLAND'S ADVICE

NO OBJECTION - SUBJECT TO APPROPRIATE MITIGATION BEING SECURED

We consider that without appropriate mitigation the application would:

- have an adverse effect on the integrity of Arun Valley Special Area of Conservation (SAC), Special Protection Area (SPA) and Ramsar site *https://designatedsites.naturalengland.org.uk/*.
- damage or destroy the interest features for which Chichester Harbour Site of Special Scientific Interest has been notified.

In order to mitigate these adverse effects and make the development acceptable, the following mitigation options should be secured:

- The delivery of mitigation measures outlined in the submitted Appropriate Assessment to achieve water neutrality.

We advise that an appropriate planning condition or obligation is attached to any planning permission to secure these measures.

Natural England's further advice on designated sites and advice on other natural environment issues is set out below.

Habitats Regulations Assessment

Natural England notes that your authority, as competent authority, has undertaken an appropriate assessment of the proposal in accordance with regulation 63 of the Conservation of Species and Habitats Regulations 2017 (as amended). Natural England is a statutory consultee on the appropriate assessment stage of the Habitats Regulations Assessment process.

Your appropriate assessment concludes that your authority is able to ascertain that the proposal will not result in adverse effects on the integrity of any of the sites in question. Having considered the assessment, and the measures proposed to mitigate for all identified adverse effects that could potentially occur as a result of the proposal, Natural England advises that we concur with the assessment conclusions, providing that all mitigation measures are appropriately secured in any planning permission given.

Further Advice on Mitigation

Natural England previously gave advice on this application in a response dated 22 September 2023 (our ref. 448792). We note that, although further detail has been provided in the updated Appropriate Assessment, the mitigation strategy remains fundamentally the same. We are therefore satisfied that the strategy proposed is sufficient to conclude no adverse effect on the integrity of the Arun Valley sites.

Sullington Warren SSSI

Please refer to our comments provided in our previous response (our ref. 448792) for our advice on this site.

Final Comments

Please note that if your authority is minded to grant planning permission contrary to the advice in this letter, you are required under Section 28I (6) of the Wildlife and Countryside Act 1981 (as amended) to notify Natural England of the permission, the terms on which it is proposed to grant it and how, if at all, your authority has taken account of Natural England's advice. You must also allow a further period of 21 days before the operation can commence.

Further general advice on consideration of protected species and other natural environment issues is provided at Annex A.

If you have any queries relating to the advice in this letter please contact me [redacted]

We would not expect to provide further advice on the discharge of planning conditions or obligations attached to any planning permission.

Should the proposal change, please consult us again.

Yours sincerely

Sophie Moore
Higher Officer- Sustainable Development Team

Annex A –Natural England general advice

Protected Landscapes
Paragraph 182 of the National Planning Policy Framework (NPPF) requires great weight to be given to conserving and enhancing landscape and scenic beauty within Areas of Outstanding Natural Beauty (known as National Landscapes), National Parks, and the Broads and states that the scale and extent of development within all these areas should be limited. Paragraph 183 requires exceptional circumstances to be demonstrated to justify major development within a designated landscape and sets out criteria which should be applied in considering relevant development proposals. Section 245 of the Levelling Up and Regeneration Act 2023 places a duty on relevant authorities (including local planning authorities) to seek to further the statutory purposes of a National Park, the Broads or an Area of Outstanding Natural Beauty in England in exercising their functions. This duty also applies to proposals outside the designated area but impacting on its natural beauty.

The local planning authority should carefully consider any impacts on the statutory purposes of protected landscapes and their settings in line with the NPPF, relevant development plan policies and the Section 245 duty. The relevant National Landscape Partnership or Conservation Board may be able to offer advice on the impacts of the proposal on the natural beauty of the area and the aims and objectives of the statutory management plan, as well as environmental enhancement opportunities. Where available, a local Landscape Character Assessment can also be a helpful guide to the landscape's sensitivity to development and its capacity to accommodate proposed development.

Wider landscapes
Paragraph 180 of the NPPF highlights the need to protect and enhance valued landscapes through the planning system. This application may present opportunities to protect and enhance locally valued landscapes, including any local landscape designations. You may want to consider whether any local landscape features or characteristics (such as ponds, woodland, or dry-stone walls) could be incorporated into the development to respond to and enhance local landscape character and distinctiveness, in line with any local landscape character assessments. Where the impacts of development are likely to be significant, a Landscape and Visual Impact Assessment should be provided with the proposal to inform decision making. We refer you to the Landscape Institute Guidelines for Landscape and Visual Impact Assessment for further guidance.

Biodiversity duty
The local planning authority has a duty to conserve and enhance biodiversity as part of its decision making. Further information is available here.

Designated nature conservation sites
Paragraphs 186-188 of the NPPF set out the principles for determining applications impacting on Sites of Special Scientific Interest (SSSI) and habitats sites. Both the direct and indirect impacts of the development should be considered. A Habitats Regulations Assessment is needed where there is a likely significant effect on a habitats site and Natural England must be consulted on 'appropriate assessments'. Natural England must also be consulted where development is in or likely to affect a SSSI and provides advice on potential impacts on SSSIs either via Impact Risk Zones or as standard or bespoke consultation responses.

Protected Species
Natural England has produced standing advice to help planning authorities understand the impact of particular developments on protected species. Natural England will only provide bespoke advice on protected species where they form part of a Site of Special Scientific Interest or in exceptional circumstances. A protected species licence may be required in certain cases.

Local sites and priority habitats and species
The local planning authority should consider the impacts of the proposed development on any local wildlife or geodiversity site, in line with paragraphs 180, 181 and 185 of the NPPF and any relevant development plan policy. There may also be opportunities to enhance local sites and improve their connectivity to help nature's recovery. Natural England does not hold locally specific information on local sites and recommends further information is obtained from appropriate bodies such as the local records centre,

wildlife trust, geoconservation groups or recording societies. Emerging Local Nature Recovery Strategies may also provide further useful information.

Priority habitats and species are of particular importance for nature conservation and are included in the England Biodiversity List published under section 41 of the Natural Environment and Rural Communities Act 2006. Most priority habitats will be mapped either as Sites of Special Scientific Interest on the Magic website or as Local Wildlife Sites. A list of priority habitats and species can be found on Gov.uk.

Natural England does not routinely hold species data. Such data should be collected when impacts on priority habitats or species are considered likely. Consideration should also be given to the potential environmental value of brownfield sites, often found in urban areas and former industrial land, further information including links to the open mosaic habitats inventory can be found here.

Biodiversity and wider environmental gains

Development should provide net gains for biodiversity in line with the NPPF paragraphs 180(d), 185 and 186. Major development (defined in the NPPF glossary) is required by law to deliver a biodiversity gain of at least 10% from 12 February 2024 and this requirement is expected to be extended to smaller scale development in spring 2024. For nationally significant infrastructure projects (NSIPs), it is anticipated that the requirement for biodiversity net gain will be implemented from 2025.

Further information on the timetable for mandatory biodiversity net gain can be found here. Further information on biodiversity net gain, including draft Planning Practice Guidance, can be found here.

The statutory Biodiversity Metric should be used to calculate biodiversity losses and gains for terrestrial and intertidal habitats and can be used to inform any development project. For small development sites, the Small Sites Metric may be used. This is a simplified version of the Biodiversity Metric and is designed for use where certain criteria are met.

The mitigation hierarchy as set out in paragraph 186 of the NPPF should be followed to firstly consider what existing habitats within the site can be retained or enhanced. Where on-site measures are not possible, provision off-site will need to be considered.

Development also provides opportunities to secure wider biodiversity enhancements and environmental gains, as outlined in the NPPF (paragraphs 8, 74, 108, 124, 180, 181 and 186). Opportunities for enhancement might include incorporating features to support specific species within the design of new buildings such as swift or bat boxes or designing lighting to encourage wildlife.

Natural England's Environmental Benefits from Nature tool may be used to identify opportunities to enhance wider benefits from nature and to avoid and minimise any negative impacts. It is designed to work alongside the Biodiversity Metric and is available as a beta test version.

Further information on biodiversity net gain, the mitigation hierarchy and wider environmental net gain can be found in government Planning Practice Guidance for the natural environment.

Ancient woodland, ancient and veteran trees

The local planning authority should consider any impacts on ancient woodland and ancient and veteran trees in line with paragraph 186 of the NPPF. Natural England maintains the Ancient Woodland Inventory which can help identify ancient woodland. Natural England and the Forestry Commission have produced standing advice for planning authorities in relation to ancient woodland and ancient and veteran trees. It should be taken into account when determining relevant planning applications. Natural England will only provide bespoke advice on ancient woodland, ancient and veteran trees where they form part of a Site of Special Scientific Interest or in exceptional circumstances.

Best and most versatile agricultural land and soils

Local planning authorities are responsible for ensuring that they have sufficient detailed agricultural land classification (ALC) information to apply NPPF policies (Paragraphs 180 and 181). This is the case regardless of whether the proposed development is sufficiently large to consult Natural England. Further

Annex A –Natural England general advice

information is contained in GOV.UK guidance Agricultural Land Classification information is available on the Magic website and the Data.Gov.uk website

Guidance on soil protection is available in the Defra Construction Code of Practice for the Sustainable Use of Soils on Construction Sites, and we recommend its use in the design and construction of development, including any planning conditions. For mineral working and landfilling, separate guidance on soil protection for site restoration and aftercare is available on Gov.uk website. Detailed guidance on soil handling for mineral sites is contained in the Institute of Quarrying *Good Practice Guide for Handling Soils in Mineral Workings*.

Should the development proceed, we advise that the developer uses an appropriately experienced soil specialist to advise on, and supervise soil handling, including identifying when soils are dry enough to be handled and how to make the best use of soils on site.

Green Infrastructure
Natural England's Green Infrastructure Framework provides evidence-based advice and tools on how to design, deliver and manage green and blue infrastructure (GI). GI should create and maintain green liveable places that enable people to experience and connect with nature, and that offer everyone, wherever they live, access to good quality parks, greenspaces, recreational, walking and cycling routes that are inclusive, safe, welcoming, well-managed and accessible for all. GI provision should enhance ecological networks, support ecosystems services and connect as a living network at local, regional and national scales.

Development should be designed to meet the 15 Green Infrastructure Principles. The GI Standards can be used to inform the quality, quantity and type of GI to be provided. Major development should have a GI plan including a long-term delivery and management plan. Relevant aspects of local authority GI strategies should be delivered where appropriate.

GI mapping resources are available here and here. These can be used to help assess deficiencies in greenspace provision and identify priority locations for new GI provision.

Access and Recreation
Natural England encourages any proposal to incorporate measures to help improve people's access to the natural environment. Measures such as reinstating existing footpaths, together with the creation of new footpaths and bridleways should be considered. Links to urban fringe areas should also be explored to strengthen access networks, reduce fragmentation, and promote wider green infrastructure.

Rights of Way, Access land, Coastal access and National Trails
Paragraphs 104 and 180 of the NPPF highlight the important of public rights of way and access. Development should consider potential impacts on access land, common land, rights of way and coastal access routes in the vicinity of the development. Consideration should also be given to the potential impacts on the any nearby National Trails. The National Trails website www.nationaltrail.co.uk provides information including contact details for the National Trail Officer. Appropriate mitigation measures should be incorporated for any adverse impacts.

Further information is set out in Planning Practice Guidance on the natural environment