Planning Received
09 APR 2024
Name:
Ref: DC/23/1615 + 1616

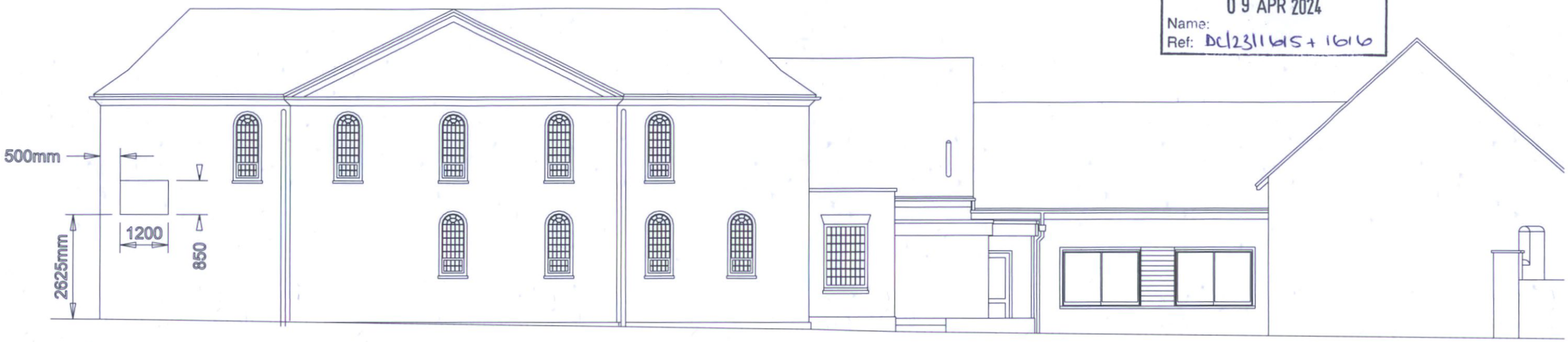

0m 1 2 3 4 5

Scale 1:100 @ A3

All dimensions in mm

North Elevation - New Sign Position

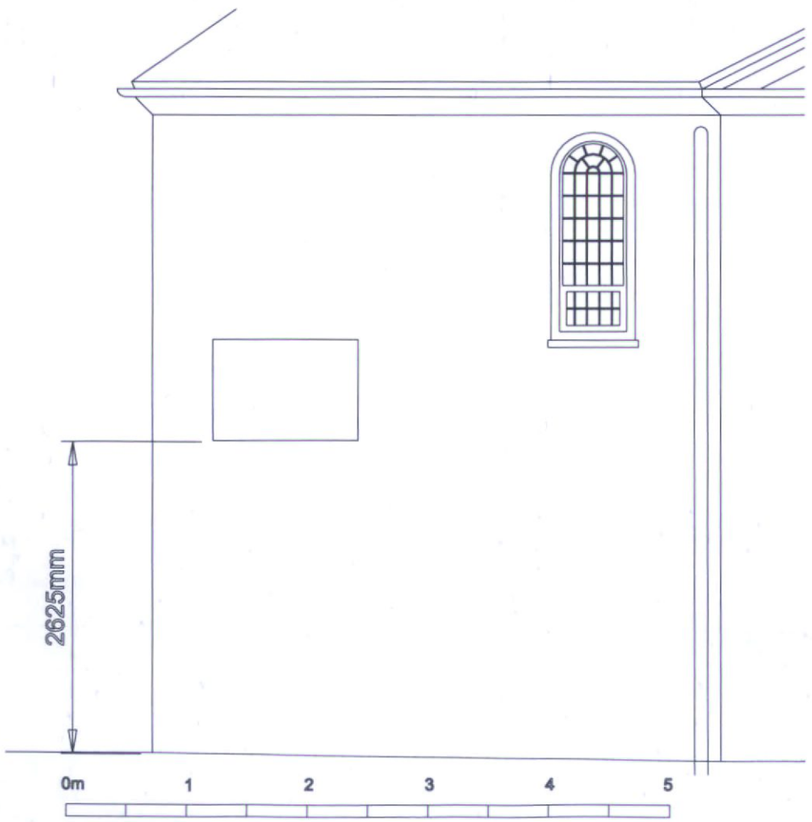

0m 1 2 3 4 5

Scale 1:50 @ A3

All dimensions in mm

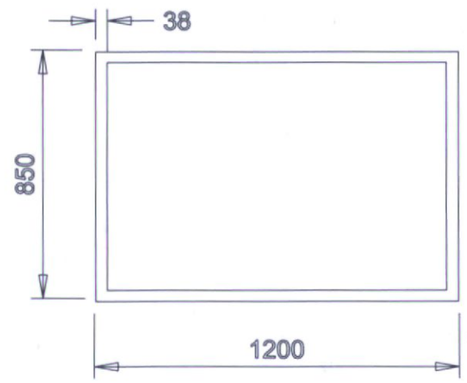

The frame depth is 25mm and the frame width is 38mm.

0m 1 2 3

Scale 1:20 @ A3

All dimensions in mm

Project:
Replacement Sign Board for The Church Centre, The Causeway, Horsham, RH12 1HE

April 2024