Site: Grainingfold Farm, Five Oaks
Prepared by: Neil Jaques
Approved by: Neil Jaques
Date: 07 June 2024

84 North Street
Guildford
GU1 4AU

Tel: 01483 531300
www.motion.co.uk

1.0 Introduction

1.1 This Technical Note has been prepared to provide additional information in relation to the operation of the proposed rainwater harvesting systems at Grainingfold Farm in Five Oaks.

1.2 This report should be read in conjunction with the following reports:

- Melin – Design Stage Water Neutrality Report – Dated 17th February 2023
- Grainingfold Water Neutrality Strategy – Dated February 2023

1.3 Horsham District Council (HDC) has requested that the following information is provided:

- A roof plan to show which areas of roof would feed in to the RWH System;
- Locations of the livestock drinking troughs;
- Details of any necessary filtration; and
- Updated details of rainwater harvesting tank sizes.

1.4 It is proposed that rainwater harvesting will be utilised to supply rainwater for use in the existing and proposed houses for flushing toilets, washing machines, topping up the swimming pool and providing drinking water for the sheep.

2.0 Rainwater Harvesting Systems

2.1 It is proposed that rainwater harvesting will be utilised to supply rainwater for flushing toilets, in the washing machines, topping up the swimming pool and providing drinking water for the sheep.

2.2 It is proposed that the rainwater harvesting will be split into four systems, one for use in the existing house, a second for topping up the swimming pool water, a third for suppling drinking water for the sheep and a fourth for use in the proposed dwelling.

Existing House

2.3 Rainwater will be collected from the roof of the eastern wing of the existing house, and it will be stored in a below ground tank in the garden to the east of the house. Figure 2.1 shows the roof area that will be drained to the tanks in red and the proposed positions of the rainwater harvesting systems in green.

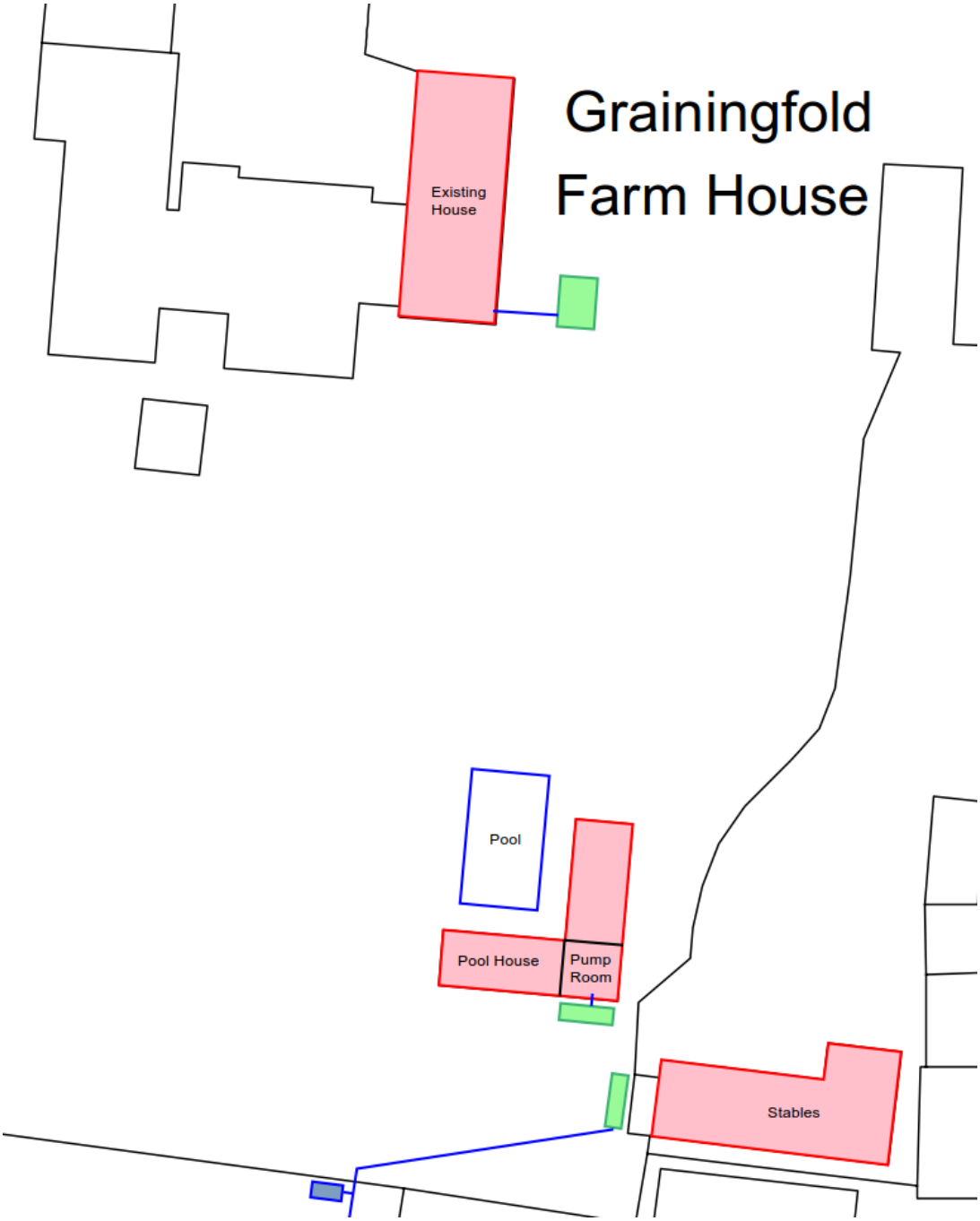

Figure 2.1 – Site Layout

2.4 The total roof area is 106m^2 and the estimated rainwater demand is 113 litres per day.

2.5 A rainwater harvesting calculation has been carried out in accordance with BS EN 16941-1:2018 to size the proposed tanks and allows for 35 days storage. A yield coefficient of 0.9 has been utilised because the existing roof has slate tiles. The calculation has been summarised below in Table 2.1 and can be found in full in **Appendix A**.

Unit	Number of Persons	Roof Area (m^2)	9.6% Annual Rainwater Yield (litres)	9.6% Annual Water Demand (litres)	Tank Size (litres)
Existing House	3	106	7,072.12	3,959.87	4,400

Table 2.1 – Existing House RWH System

2.6 The calculation confirms that the yield is sufficient to meet the demand and it is proposed to provide a tank of 4,400 litres. The proposed rainwater harvesting tank is included in **Appendix B**.

Swimming Pool

2.7 Runoff from the whole roof of the pool house, shown red in Figure 2.1 above, will be collected and stored in the adjacent rainwater harvesting tank, shown in green. A below ground tank will be provided to the rear of the pool house and water will be supplied to the pump room to enable the pool to be topped up following backwashing of the filters.

2.8 The total roof area is 75m^2 and the estimated rainwater demand is 96.16 litres per day.

2.9 A rainwater harvesting calculation has been carried out in accordance with BS EN 16941-1:2018 to size the proposed tanks and allows for 35 days storage. A yield coefficient of 0.8 has been utilised because the existing roof has clay tiles. The calculation has been summarised below in Table 2.2 and can be found in full in **Appendix A**.

	Water Use per Day (litres)	Roof Area (m^2)	9.6% Annual Rainwater Yield (litres)	9.6% Annual Water Demand (litres)	Tank Size (litres)
Swimming Pool	96.16	75	4,447.87	3,369.45	3,400

Table 2.2 – Swimming Pool RWH System

2.10 The calculation confirms that the yield is sufficient to meet the demand and it is proposed to provide a tank of 3,400 litres. The proposed rainwater harvesting tank is included in **Appendix B**.

Stables

2.11 It is proposed to collect water from the roof of the stables to provided drinking water for the existing sheep.

2.12 Runoff from the whole roof of the existing stables, shown red in Figure 2.1 above, will be collected and stored in the adjacent rainwater harvesting tank, shown in green. A below ground tank will be provided to the west of the existing stables.

2.13 Water is currently supplied to an existing trough approximately 90 metres south of the stables via a pipe which is connected to an outside tap adjacent to the stables. The trough is shown blue in figure 2.2 below and the route of the existing pipework is shown as a blue line. It is proposed that the pipe is connected the rainwater harvesting system to fill the troughs. Also, an existing moveable trough will be located closer to the stables as shown in figure 2.2 and this will also be connected to the rainwater harvesting system.

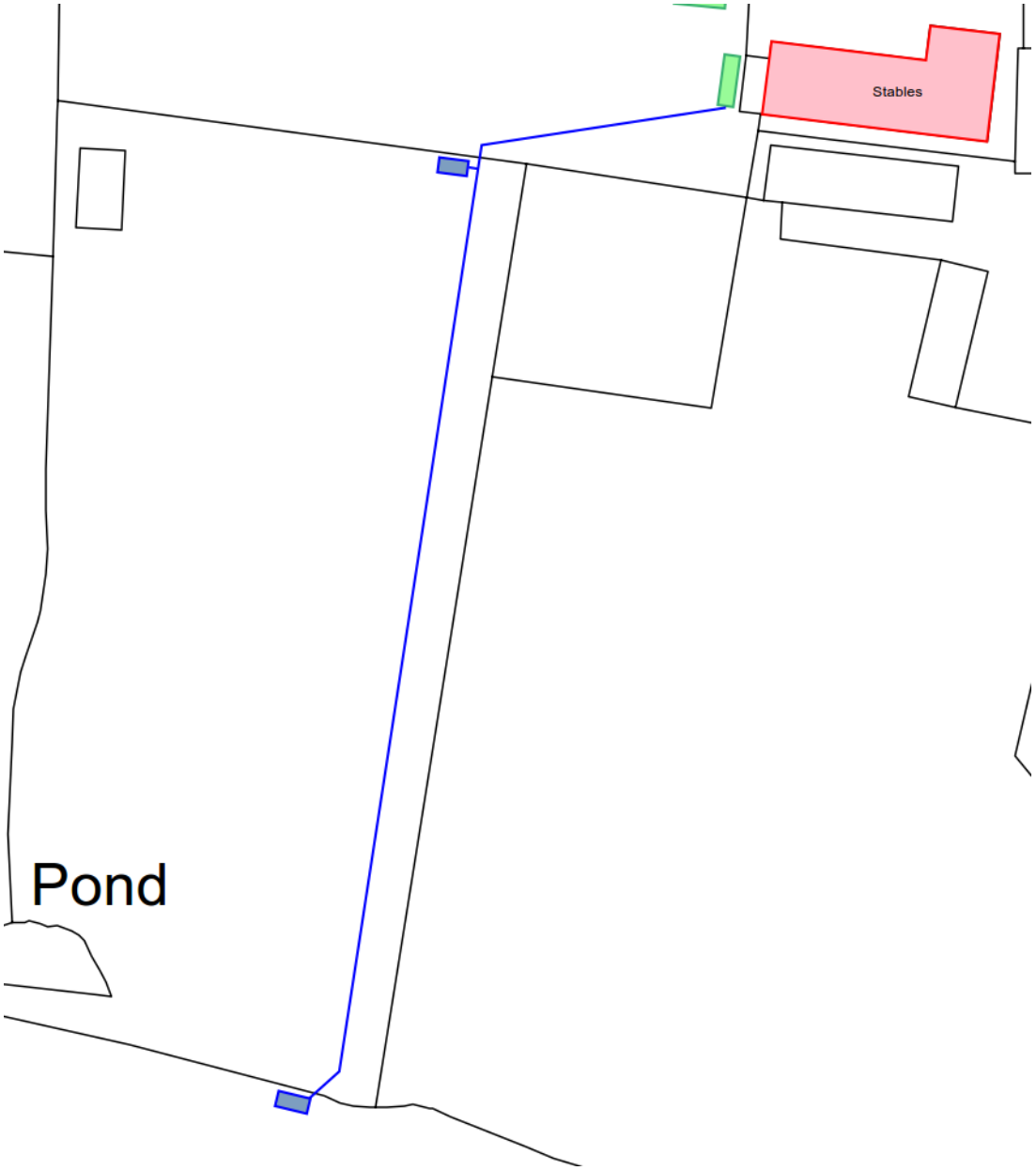

Figure 2.2 – Position of Troughs

2.14 The total roof area is 94m^2 and the estimated rainwater demand is 75.23 litres per day.

2.15 A rainwater harvesting calculation has been carried out in accordance with BS EN 16941-1:2018 to size the proposed tanks and allows for 35 days storage. A yield coefficient of 0.8 has been utilised because the existing roof has clay tiles. The calculation has been summarised below in Table 2.3 and can be found in full in **Appendix A**.

	Water Use per Day (litres)	Roof Area (m^2)	9.6% Annual Rainwater Yield (litres)	9.6% Annual Water Demand (litres)	Tank Size (litres)
Stables	75.23	94	5,574.67	2,636.06	3,400

Table 2.3 – Stables RWH System

2.16 The calculation confirms that the yield is sufficient to meet the demand and it is proposed to provide a tank of 3,400 litres. The proposed rainwater harvesting tank is included in **Appendix B**.

Proposed Dwellings

2.17 Rainwater will be collected from the roof of the proposed dwelling (not including the roof over the car port), and it will be stored in a below ground tank in the garden to the south of the house. Figure 2.4 shows the roof area that will be drained to the tanks in red and the proposed positions of the rainwater harvesting systems in green.



Figure 2.4 – Proposed Site Layout

2.18 The total roof area is 170m^2 and the estimated rainwater demand is 179.7 litres per day.

2.19 A rainwater harvesting calculation has been carried out in accordance with BS EN 16941-1:2018 to size the proposed tanks and allows for 35 days storage. A yield coefficient of 0.9 has been utilised because the building has a corrugated metal sheet roof. The calculation has been summarised below in Table 2.4 and can be found in full in **Appendix A**.

Unit	Number of Persons	Roof Area (m^2)	9.6% Annual Rainwater Yield (litres)	9.6% Annual Water Demand (litres)	Tank Size (litres)
Proposed Dwellings	4.94	170	11,342.07	6,295.56	6,800

Table 2.4 – Proposed Dwellings RWH System

2.20 The calculation confirms that the yield is sufficient to meet the demand and it is proposed to provide a tank of 6,800 litres. The proposed rainwater harvesting tank is included in **Appendix B**.

Operation of Rainwater Harvesting Systems

2.21 The rainwater harvesting systems will be maintained in accordance with a Management and Maintenance Plan and a copy has been included in **Appendix C**.

2.22 The Management and Maintenance Plan sets out the necessary filtration for the intended end use of the water and details the necessary maintenance activities for the lifetime of the development to maintain the water quality.

3.0 Summary

3.1 The above information confirms the proposed roofs areas which will be draining to each rainwater harvesting system.

3.2 Details of the trough locations are provided and show how water will be pumped to the locations shown.

3.3 A Management and Maintenance Plan has been provided which confirms what treatment will be in place to maintain the water quality of the systems.

3.4 Revised rainwater harvesting calculations have been provided detailing the required tanks sizes to meet the demand.

3.5 The proposed rainwater harvesting tanks will provide 18,000 litres of storage and will provide in excess of 35 days of drought tolerance.

Appendix A

Rainwater Harvesting Calculations

Rainwater Harvesting System (BS EN 16941-1:2018 - Intermediate Approach)

AAR	858	Average Annual Rainfall
e	0.9	Yield Coefficient
h	0.9	Hydraulic Filter Efficiency
P_d	62.80	Daily Requirement per Person

Unit	Type	No. Beds	No. Units	Census	Population	Roof Area (m^2)	9.6% Annual Rainwater Yield (litres)	9.6% Annual Water Demand (litres)	Tank Size (litres)
Dwelling	House	5	1	3	3	106	7,072.12	6,601.54	6,800
		Totals	1		3		7,072.12	6,601.54	

Rainwater Harvesting System (BS EN 16941-1:2018 - Intermediate Approach)

AAR	858	Average Annual Rainfall
e	0.8	Yield Coefficient
h	0.9	Hydraulic Filter Efficiency
P_d	96.16	Daily Water Use

Unit	Type	Roof Area (m^2)	9.6% Annual Rainwater Yield (litres)	9.6% Annual Water Demand (litres)	Tank Size (litres)
Pool	Pool	75	4,447.87	3,369.45	3,400
			4,447.87	3,369.45	

Rainwater Harvesting System (BS EN 16941-1:2018 - Intermediate Approach)

AAR	858	Average Annual Rainfall
e	0.8	Yield Coefficient
h	0.9	Hydraulic Filter Efficiency
P_d	75.23	Daily Water Use

Unit	Type	Roof Area (m^2)	9.6% Annual Rainwater Yield (litres)	9.6% Annual Water Demand (litres)	Tank Size (litres)
Stables	Sheep	94	5,574.67	2,636.06	3,400
			5,574.67	2,636.06	

Rainwater Harvesting System (BS EN 16941-1:2018 - Intermediate Approach)

AAR	858	Average Annual Rainfall
e	0.9	Yield Coefficient
h	0.9	Hydraulic Filter Efficiency
P_d	36.37	Daily Requirement per Person

Unit	Type	No. Beds	No. Units	Census	Population	Roof Area (m^2)	9.6% Annual Rainwater Yield (litres)	9.6% Annual Water Demand (litres)	Tank Size (litres)
Dwelling	House	3	2	2.47	4.94	170	11,342.07	6,295.56	6,800
		Totals	2		4.94		11,342.07	6,295.56	

Appendix B

Rainwater Harvesting Tanks

SDS 3,400 Litre Rainwater Harvesting Tank



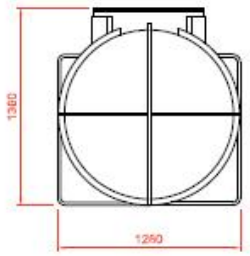

END ELEVATION

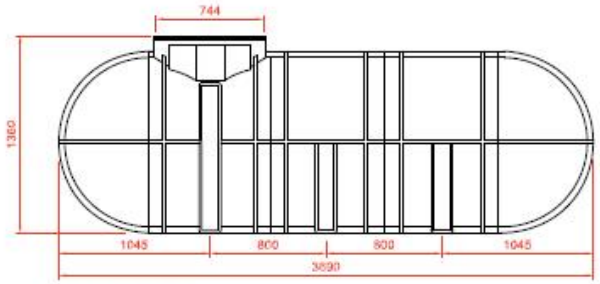

SIDE ELEVATION

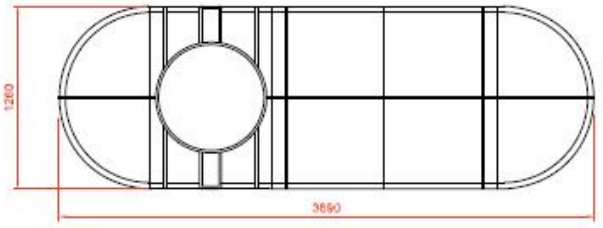

PLAN

Client	SDS	Details
Project Name	3,400 Litre Tank	
Type	Standard Detail	
Date	-	
Drawing no.	-	
Revision	A	

Notes:

This Drawing is to be read in conjunction with all relevant Architect, Engineers and Specialists drawings and specifications.

Do not scale from the drawing in either paper or digital form. Use written dimensions only.

SDS Water Infrastructure Systems

SDS 6,800 Litre Rainwater Harvesting Tank



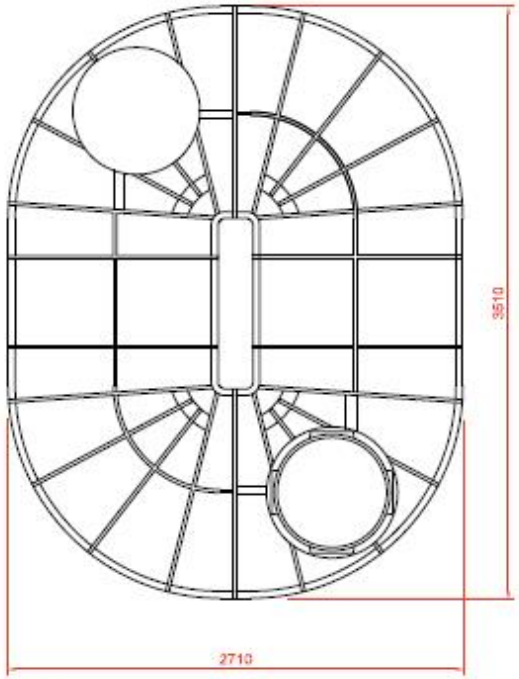

PLAN

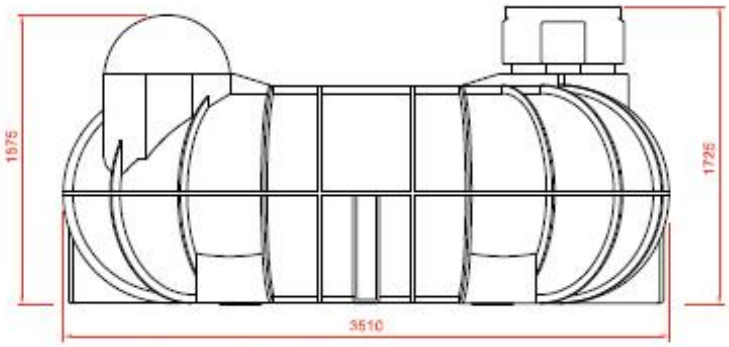

SIDE ELEVATION

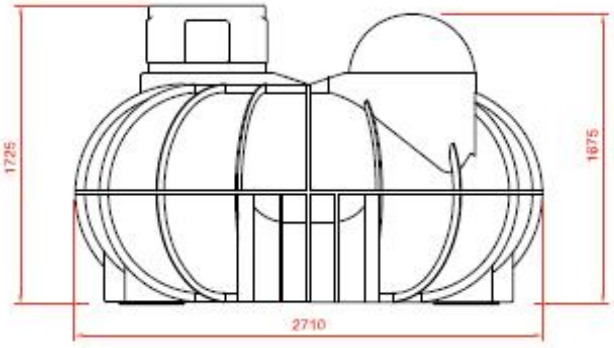

END ELEVATION

Client	SDS	Details
Project Name	6,800 Litre Tank	
Type	Standard Detail	
Date	-	
Drawing no.	-	
Revision	A	

Notes:

This Drawing is to be read in conjunction with all relevant Architect, Engineers and Specialists drawings and specifications.

Do not scale from the drawing in either paper or digital form. Use written dimensions only.

SDS Water Infrastructure Systems

Appendix C

Management and Maintenance Plan

Grainingfold Farm
Five Oaks

Rainwater Harvesting Management and Maintenance Plan

For

Ms S Hart

motion

Document Control Sheet

Grainingfold Farm

Five Oaks

Ms S Hart

This document has been issued and amended as follows:

Date	Issue	Prepared by	Approved by
7th June 2024	FINAL	Laura Jagiela	Neil Jaques

Motion
84 North Street
Guildford
GU1 4AU
T 01483 531300
F 01483 531333
E info@motion.co.uk
W www.motion.co.uk

Contents

1.0 Introduction 1
2.0 Treatment 2
3.0 Water Quality Control 3
4.0 Continuity of Supply 4
5.0 Maintenance Categories 5
6.0 The Rainwater Harvesting System 6
7.0 General Maintenance Principles 7
8.0 Inspection and Maintenance Frequency of Components 8

1.0 Introduction

1.1 The report sets out the principles for the long-term management and maintenance of the rainwater harvesting systems at the proposed development.

1.2 The purpose of this report is to ensure that the client has a robust inspection and maintenance plan for the lifetime of the development. This will ensure the optimum operation of the rainwater harvesting systems and that they will be continually maintained. This will ensure that the proposed development will remain water neutral.

1.3 All those responsible for maintenance should follow relevant health and safety legislation for all activities listed within this report (including lone working, if relevant). Method statements and risk assessments should always be undertaken and made available, if requested.

1.4 This report has been produced by Motion to describe the typical management and maintenance tasks that are known at the design stage (such as maintenance frequencies and typical tasks). These have been drawn from industry guidance such as BS EN 16941-1:2018, The SuDS Manual (CIRIA 753) and the manufacturer's own guidance.

1.5 Maintenance is considered as a construction activity under the CDM Regulations 2015. Under the CDM Regulations, it is a requirement that a competent person be appointed to carry out a required role. CDM defines a competent person as an individual with sufficient knowledge of the specific tasks to be undertaken, as well as sufficient experience and ability to carry out their duties in relation to the task in a way that secures health and safety on site.

1.6 In recognition of the requirements of the CDM Regulations 2015, this rainwater harvesting management and maintenance plan expects that the maintenance work will be carried out by a competent person who must have prior knowledge of the rainwater harvesting systems onsite.

2.0 Treatment

2.1 The rainwater harvesting system shall incorporate suitable treatment in accordance with BS EN 16941-1:2018, to ensure that the water quality is suitable for its intended end use.

2.2 The treatment will cover the following:

- Removal of coarse particles, upstream of the storage;
- Retention of fine particles by sedimentation and flotation in the storage tank; and
- Filtration following the storage device, depending on the intended use.

2.3 Preliminary treatment will be provided in the form of filters and separators prior to the storage tank. This will include leaf guards on gutters and a leaf filter. A first flush diverter will be included to divert particles contained in rainwater away from the tank and to a suitable drain. These measures will prevent coarse solids and organic matter from entering the storage tank.

2.4 Any fine particles will then be separated either by sedimentation by settling out to the bottom of the tank, or flotation to the water surface.

2.5 A calmed inlet will be incorporated in the tank to prevent turbation of the sediment at the bottom of the tank by the inflow of water. Removal of the sediment will be carried out in accordance with Table 5.1 below.

2.6 Removal of floating particles will occur when the tank overflows, or when it is cleaned out in accordance with Table 5.1 below.

2.7 Water will be extracted from the tank via a floating pump, which will extract water from level that is above any sediment collected at the bottom of the tank and below any floating particles. This will help maintain the quality of harvested rainwater that is to be used in the property.

2.8 Where the water is being used for laundry, it is understood that the Council require an additional level of treatment. Therefore, it is proposed that a UV filter will be incorporated in advance of the washing machine and this will kill any microorganisms, prior to it being used in the washing machine.

2.9 A schematic showing the layout of the equipment used in a rainwater harvesting system is shown in Figure B.2 of BS EN 16941-1:2018.

3.0 Water Quality Control

3.1 It is understood that the system will be considered as a private water supply and, therefore, will be governed by the Private Water Supply Regulations 2016. These are regulated by the local council's Environmental Health Officer or Pollution Control Officer. However, the regulations in England and Wales do not require monitoring to be undertaken where the water supply is to a single domestic dwelling, unless the local authority is requested to do so by the owner or occupier of the dwelling, or if they are concerned that the supply presents a potential danger to human health.

3.2 NA.1 in BS EN 16941-1:2018 states that frequent testing should not normally be required for rainwater harvesting systems to ensure the water quality. It states that observations for water quality should be made during maintenance visits and testing should be carried out where the system is not operating satisfactorily. When sampling is required a sample should be taken and carried out in accordance with the guidance set out in NA.1 and Table NA.1 sets out the guideline values for bacteriological monitoring and Table NA.2 for non-bacteriological monitoring.

3.3 The water quality will need to be maintained at a suitable level commensurate with the end use and the treated water quality will have to meet those set out in the Private Water Supply Regulations.

4.0 Continuity of Supply

4.1 To ensure that sufficient water is available for re-use, the storage tank will be sized so that it can provide 35 days of storage, which will provide sufficient supply during periods of drought.

4.2 Where drought periods extend beyond 35 days, the rainwater harvesting system will include an automatic mains backup. This will ensure that water is available at all times, even during extended periods of drought.

5.0 Maintenance Categories

5.1 There are three categories of maintenance activities referred to in this report. These are:

Inspection and Monitoring

- Inspection and monitoring tasks should be carried out frequently, nominally once a month, and should include a visual inspection of all components including all inlets and outlets.

Regular Maintenance (Monthly)

- Regular maintenance consists of basic tasks done on a frequent and predictable schedule.

Seasonal Maintenance (Quarterly)

- Seasonal maintenance comprises tasks that are likely to be required periodically, but on a much less frequent and predictable basis than the routine tasks.

Remedial Maintenance

- Remedial maintenance comprises of intermittent tasks that may be required to rectify faults associated with the system that have been identified through visual inspections. The likelihood of faults can be minimised by correct installation, regular inspection and timely maintenance.

6.0 The Rainwater Harvesting System

6.1 The proposed rainwater harvesting system will receive rainwater passing through and over several structures and will store rainwater within several items of infrastructure. These include:

- Roofs
- Gutters
- Filters;
- Pumps;
- Overflows; and
- Storage tanks.

6.2 All components should be installed in accordance with the manufacturer's instructions and to the levels/arrangements as defined on the designer's drawings.

6.3 This report should be read in conjunction with the rainwater harvesting design, so that the location and type of each item of infrastructure can be recognised and understood.

6.4 Manufacturer's instructions are to be added to this document once specific products have been selected and installed as part of the detailed design. This document will subsequently form the basis for a maintenance regime for the rainwater harvesting system.

7.0 General Maintenance Principles

7.1 All rainwater harvesting systems require regular maintenance to keep them working at optimum efficiency and capacity. The maintenance of the rainwater harvesting systems should be carried out alongside other regular maintenance tasks within the property.

7.2 Timely and adequate maintenance will increase the lifespan of the rainwater harvesting system. Inadequate maintenance will do the reverse.

7.3 The property owners are responsible for the monitoring and maintenance of the rainwater harvesting system for the lifetime of the development.

8.0 Inspection and Maintenance Frequency of Components

8.1 Table 5.1 below lists each of the components used within the development's rainwater harvesting systems. It suggests an indicative maintenance frequency for each component and ascribes typical maintenance tasks to them.

8.2 In accordance with the Drinking Water Inspectorate's Private Water Supply regulations, it is the responsibility of the homeowner to ensure that all necessary maintenance activities are carried out in a timely manner and that the design performance of each drainage component is preserved. The homeowner may appoint a competent contractor to assist with the maintenance of their rainwater harvesting system. Additionally, the Council has a role to ensure the regulations are upheld by the homeowner.

8.3 If there is any uncertainty regarding the correct and safe methods of cleaning, or what equipment should be used, the manufacturer should be consulted.

Maintenance Schedule	Required Action	Frequency
Regular Maintenance	Inspection of the tank for debris and sediment build-up	Annually
	Inspection of inlets/outlets and withdrawal devices	Annually
	Inspection of filters	Annually
	Inspection of Pumps	Annually
	Inspection of overflow areas	Annually
	Inspection of gutters	Annually
	Cleaning of tank	Annually
	Cleaning of inlets and outlets and withdrawal devices	Annually
	Cleaning of gutters and roof drain filters	Annually
	Check pump operation	Annually
Occasional Maintenance	Cleaning and/or replacement of any filters	Quarterly
Remedial Actions	Repair of overflow erosion damage or damage to tank	As required
	Pump repairs	As required

Table 5.1 – Maintenance tasks and frequencies

8.4 Upon completion of maintenance activities, a record should be kept of the work carried out. This should be retained and an annual maintenance report should be compiled, which should include the following:

- Observations resulting from inspections;
- Maintenance and operation activities undertaken during the year; and

- Recommendations for inspections and maintenance programmes for the following year.

8.5 On the next page is a table with suggested information that should be recorded and included with the maintenance plan. As mentioned in the introduction to this document, this should be a living document and regularly updated, as required and should be kept for the lifetime of the development.

Date	Component requiring maintenance	Issues prompting maintenance	Scheduled maintenance (Y/N)	Maintenance carried out	Additional works required (Y/N). If yes, please detail	Next scheduled date of inspection and maintenance