

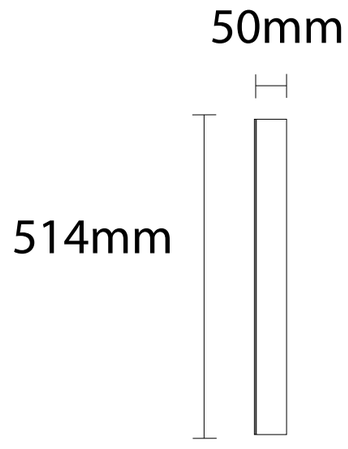

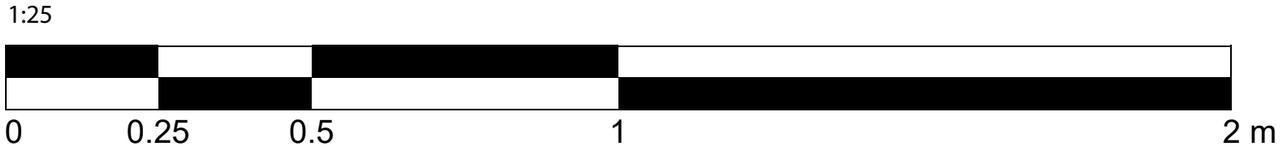

Description:
ITEM A:

Built Marketing Text
3mm aluminium returns with metal faces

~~Detail for Front and Rear elevation of the building~~

Revision Notes:
N/A

Colour Reference/s:
N/A

Project Title:
PMW Offices - Horsham

Author:
Andy Elliott

Purpose of Issue:
Planning

Project Number:	Revision:	Scale:
11872	0	100%

Copyright © 2024

Drawing Number:
11872 - PMW Building Signage Marketing