PRINT MAY BE REDUCED - ~~DO NOT SCALE~~

FOR PLANNING PURPOSES ONLY

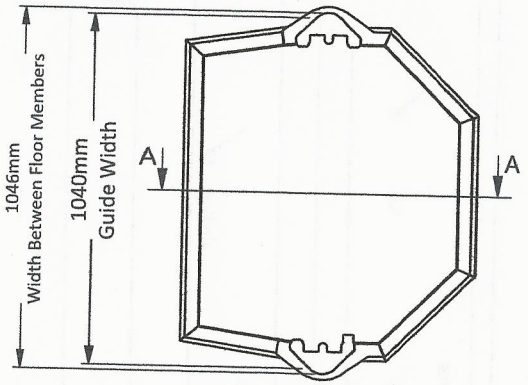

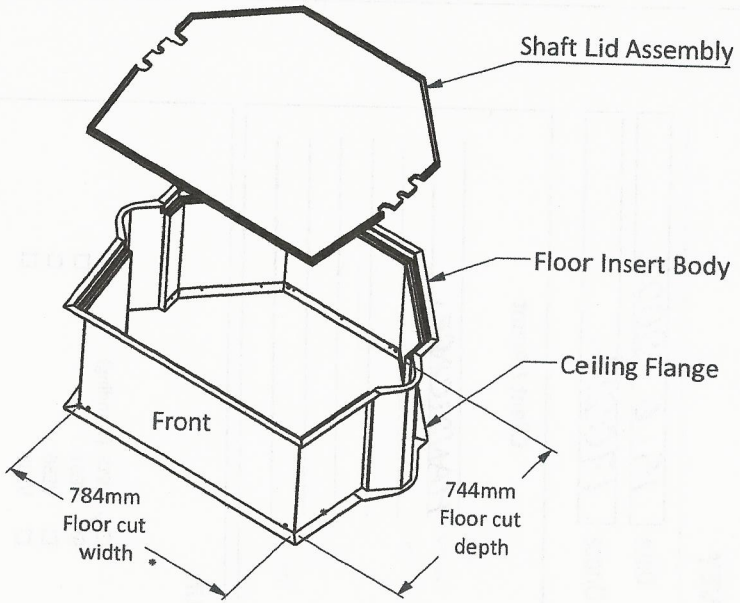

Exploded View

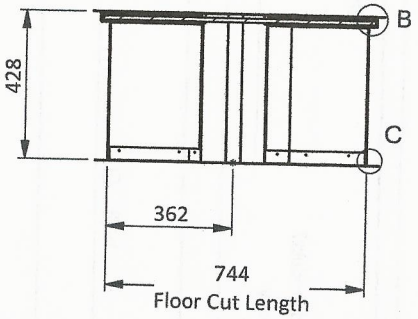

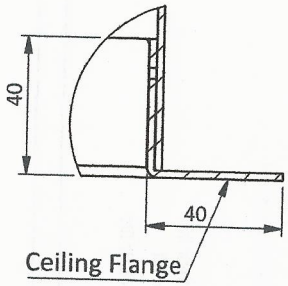

DETAIL C

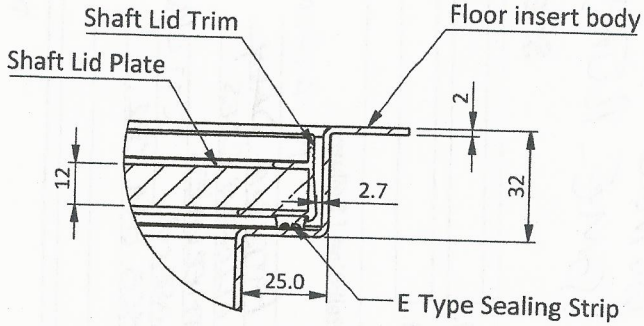

DETAIL B



Duo Classic

The information contained herein is the exclusive property of Stiltz Ltd. and shall not be distributed, reproduced, or disclosed in whole or in part without prior written permission of Stiltz Ltd.

Stiltz

© Stiltz Ltd. 2013		TITLE	Duo Floor Insert Body & Shaft Lid Assembly
Drawn W.Wang	Date 27/03/2018		
DIMENSIONS IN MM UNLESS OTHERWISE NOTED THIRD ANGLE PROJECTION - AS 1100		A4	Dwg No SCALE: 1:20