PRINT MAY BE REDUCED - ~~DO NOT SCALE.~~

FOR PLANNING PURPOSES ONLY

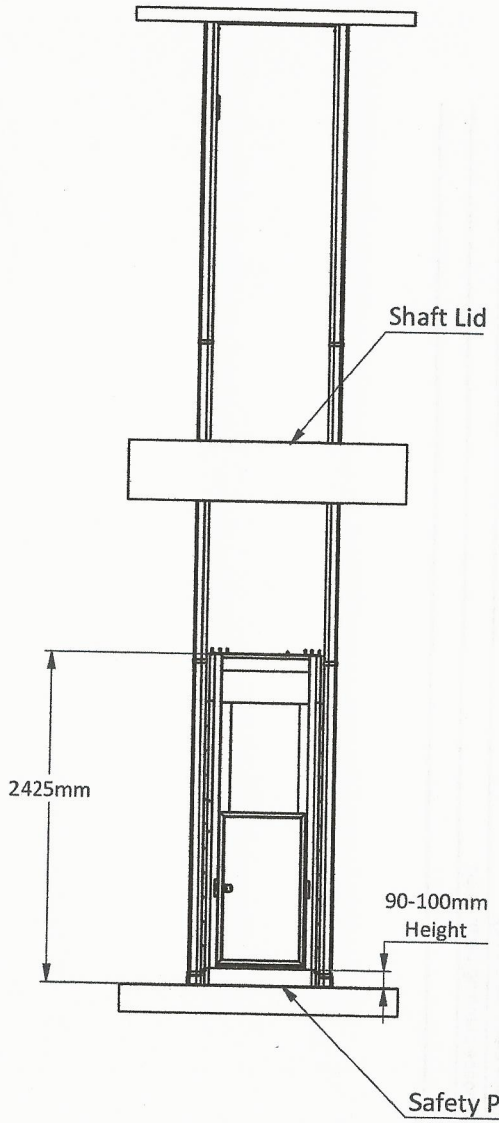

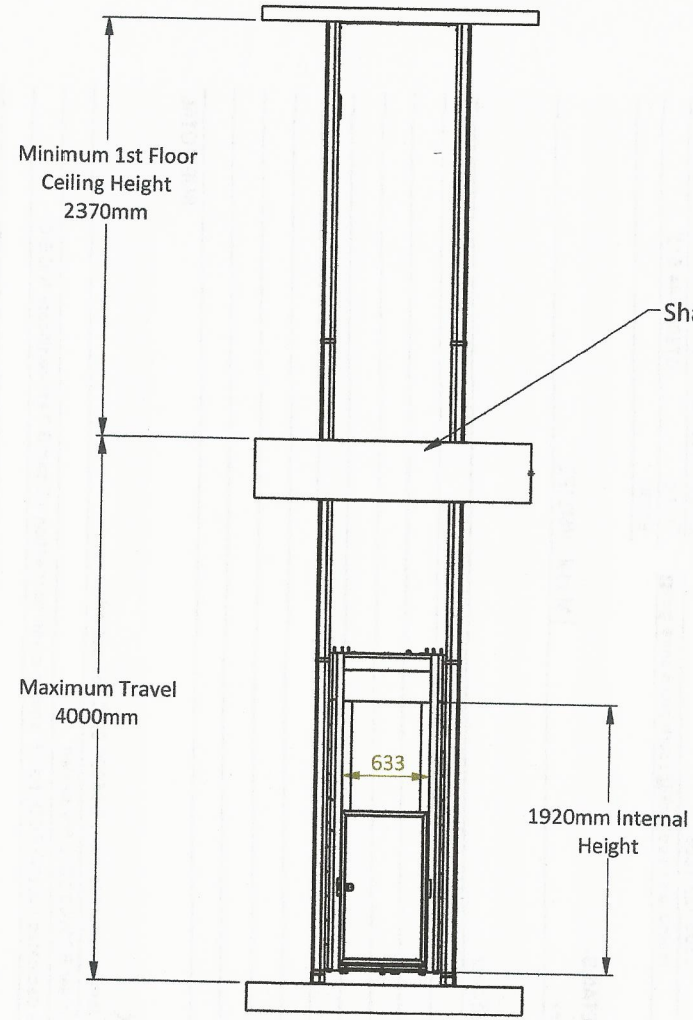

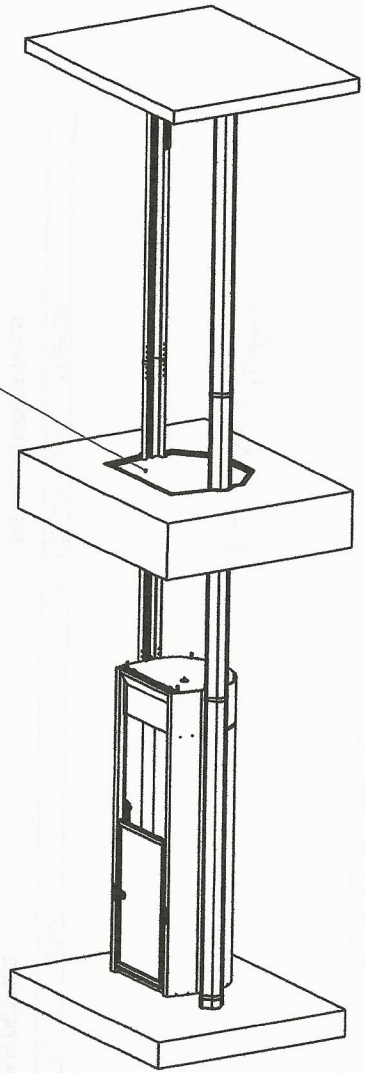

0m 0.5 1m 1.5 2m

SCALE BAR

Duo Classic

The information contained herein is the exclusive property of Stiltz Ltd. and shall not be distributed, reproduced, or disclosed in whole or in part without prior written permission of Stiltz Ltd.

Stiltz

© Stiltz Ltd. 2013		TITLE	Duo Lift Installation
Drawn W.Wang	Date 27/03/2018		
THIRD ANGLE PROJECTION - AS 1100	DIMENSIONS IN MM UNLESS OTHERWISE NOTED	A4	Dwg No
			SCALE: 1:50