PRINT MAY BE REDUCED - ~~DO NOT SCALE.~~

FOR PLANNING PURPOSES ONLY

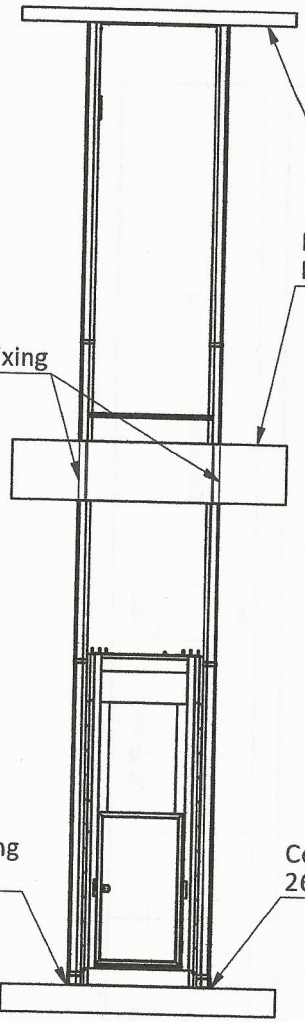

Technical Information

The Duo

- **DRIVE SYSTEM:**
  Roped Drum,Braked Gear Motor Drive
- **CAPACITY:**
  MAX Capacity 170kg / 2persons
- **TRAVEL:**
  Up to 4000mm
- **NO of FLOORS:**
  2 Maximum
- **SUPPLY VOLTAGE:**
  240v 1PH 50HZ
- **RUNNING CURRENT:**
  2.5 AMP
- **STARTING CURRENT:**
  3.5 AMP
- **STANDARD COLOUR:**
  Off White / Cream(RAL 9003)
  (Other colours available)

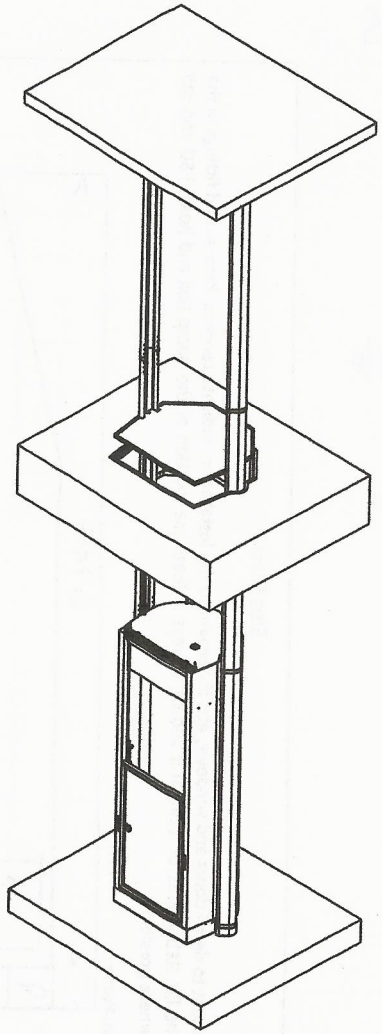

0 0.5 1m 1.5 2m

SCALE BAR

Duo Classic

The information contained herein is the exclusive property of Stiltz Ltd. and shall not be distributed, reproduced, or disclosed in whole or in part without prior written permission of Stiltz Ltd.

Stiltz

© Stiltz Ltd. 2013		TITLE	Duo Lift Installation
Drawn W.Wang	Date 27/03/2018		
DIMENSIONS IN MM UNLESS OTHERWISE NOTED THIRD ANGLE PROJECTION - AS 1100		A4	Dwg No SCALE: 1:50