

ilex

Landscape Architecture : Urban Design : Masterplanning

For

croudacegroup

LANDSCAPE AND ECOLOGICAL MANAGEMENT PLAN

LAND AT DOWNSVIEW AVENUE,

STORRINGTON CH018-003R

14/03/2021

CONTENT

		Page No.
1.0	Introduction	2
2.0	Description and evaluation of features to be created and managed	3
3.0	Ecological trends and constraints that might influence management	4
4.0	Management Objectives	6
5.0	Appropriate Management Options for achieving aims and objectives	7
6.0	Prescriptions for Management Actions	11
7.0	Work Schedule; Annual Work Plan	19
8.0	Details of the organization or body responsible for implementation	29
9.0	Ongoing monitoring and remedial measures	30

Refer to CH018-001 Landscape Strategy

APPENDIX A

- CH018-002 LEMP Plan
- LLD1167-ARB-DWG-004 Bat Roost Potential Plan (Lizard Landscape Design and Ecology)
- Management Plan (Croudace Homes Group)

1.0 INTRODUCTION

1.1 The following Landscape and Ecological Management Plan sets out the necessary prescriptions for the landscape management of the existing and proposed landscape associated with Land at Downsview Avenue, Storrington (hereafter referred to as 'the Site').

1.2 This report has been produced to address Condition 4 of the outline approval DC/19/2015, which states;

'The submission of the (landscaping) reserved matters application pursuant to the outline planning application hereby permitted shall be accompanied by a Landscape and Ecological Management Plan (LEMP)…

The LEMP shall also include details of the legal and funding mechanism(s) by which the long- term implementation of the plan will be secured by the developer with the management body(ies) responsible for its delivery. The plan shall also set out (where the results from monitoring show that conservation aims and objectives of the LEMP are not being met) how contingencies and/or remedial action will be identified, agreed and implemented so that the development still delivers the fully functioning biodiversity objectives of the originally approved scheme. The LEMP shall also detail the long-term design objectives, management responsibilities, a description of landscape components, management prescriptions, maintenance schedules and accompanying plan delineating areas of responsibility for all communal landscape areas. The landscape areas shall thereafter be managed and maintained in accordance with the approved details unless otherwise agreed to in writing by the Local Planning Authority.

Reason: To allow the LPA to discharge its duties under the UK Habitats Regulations 2017, the Wildlife & Countryside Act 1981 as amended and s40 of the NERC Act 2006 (Priority habitats & species), and in accordance with Policy 33 of the Horsham District Planning Framework (2015).'

1.3 This report sets out the Landscape and Ecological management objectives, as well as providing detailed schedules for the operation of the plan.

2.0 DESCRIPTION AND EVALUATION OF FEATURES TO BE CREATED AND MANAGED

2.1 CH018-001 Landscape Strategy provides an overview of the Landscape Design and demonstrates how the principles of the approved plans will be delivered.

2.2 Broadly, the site comprises a semi-improved grassland field bound by hedgerows, trees and dense scrub alongside scattered patches of scrub, tall ruderal, bracken and amenity planting.

2.3 The ecological assessments have identified the presence of Badgers, Dormice and the potential for bat roosts along the site boundaries. Badger setts were found at the north eastern corner of the site, whereas Dormice habitat was identified in the existing vegetation along the western, northern and eastern site boundaries. A number of trees have been identified as having potential for roosting bats, also on the western, northern and eastern site boundaries.

2.4. All the existing vegetation on the site boundaries is to be retained and enhanced with additional areas of planting that will bolster the habitats for the benefit of wildlife, and particularly the protected species noted above. A comprehensive scheme of Bird, Bat and Dormice nest boxes will be provided.

2.5 Vegetation along the southern site boundary is sparse. A new soft landscape strip will be created, comprised of native trees. This will strengthen the visual containment of the site as viewed from the south, whilst providing habitat connectivity between exisiting vegetation on the other site boundaries.

2.6 An attenuation basin will be created in the open space area to the north of the site. It will be sown with native wet meadow seed mix and have pockets of native marginal planting.

2.7 A Public Right of Way crosses the site from north to south along the western boundary.

2.8 Therefore, the main features to be managed and enhanced are the existing trees and understorey vegetation on the site boundaries. These areas will have to be protected during construction and strengthened with a comprehensive planting scheme that enhances habitat for wildlife, whilst providing an attractive setting to the development, and the Public Right of Way.

3.0 ECOLOGICAL TRENDS AND CONSTRAINTS THAT MIGHT INFLUENCE MANAGEMENT

3.1 The principal constraints are the need to prevent harm to protected species and to safeguard their habitat, and to provide a good standard of landscape amenity for the Public Right of Way.

3.2 However, there are broader forces for change or trends that affect the landscape and ecological plan. Climate change is resulting in increasing temperatures and changes in rainfall patterns, new pests and diseases and more frequent flooding events. This affects the viability of planting species. The provision of new planting and habitat creation must be robust. Similarly, the Landscape Character Assessment for the area notes a general decline in coppiced woodland management.

3.3 Precautionary safeguards are recommended with respect to badgers. A badger activity survey should also be completed 4-6 weeks prior to any works at the Site in order to reassess badger activity including presence of active setts within the vicinity of the Site. The foraging habitat of badgers around their setts is ideally comprised of woody native species, and fruiting varieties including ornamental fruiting varieties. CH018-003 LEMP Plan shows the location of Badger setts and indicates the extent of a 20m buffer. During this area, there can be no construction, although planting works (and maintenance operations are permitted).

3.4 Similarly, for Dormice, any vegetation clearance on the site should take place over winter months, November-March inclusive to avoid the main breeding season. This should remove sufficient vegetation to persuade dormice emerging from hibernation in April or May to move to more appropriate habitat nearby, i.e. the remainder of the hedgerows and the adjacent treelines which are to be maintained on site and subject to enhancements.

- Vegetation should be cut down by hand to around 30cm high to avoid hibernation habitat.
- All cut materials must be removed from site and chipped to avoid suitable dormouse and bird habitat being left on site.
- Clearance should be conducted using best practice guidelines and conducted under ecological watching brief including and Ecological Clerk of Works.

Dormice require a high diversity of scrub and tree species to provide a constant supply of food sources throughout the active season. As dormouse typically remain within 70m of their nest, a

high diversity of scrub and tree species is required within a relatively small area. Dormice are highly arboreal and will not cross large open areas. Easy access between the understory and canopy and within the canopy itself is therefore important, with links present between woody vegetation at all levels. This may be provided by a continuous understory with scattered larger canopy trees for example or linked canopy trees. A carefully planned coppice management approach can be beneficial for dormouse habitat.

3.5 Clearance and construction works will be scheduled outside of the main bird breeding season (March to August inclusive). If in the event works need to proceed within this period, then specialist advice from a suitably qualified ecologist should be sought.

4.0 MANAGEMENT OBJECTIVES

4.1 The management objectives are;

- To safeguard protected species and their habitats during construction and to provide them with enhanced habitat.
- To provide a high-quality landscape setting for the development with new street trees, soft landscape verges and front garden planting to soften the streetscene
- To contribute to biodiversity objectives through the management and creation of a diversity of planting types and habitats particularly focused on the protected species relevant to the site.

5.0 APPROPRIATE MANAGEMENT OPTIONS FOR ACHIEVING THE AIMS AND OBJECTIVES

5.1. A comprehensive habitat enhancement scheme as described in CH018-001 Landscape Strategy aims to strengthen the existing habitats around the site boundaries.

5.2 During construction, these habitats will be protected with fencing at the locations indicated on CH018-002 LEMP PLAN. Fencing shall be to BS5837:2012. A detail is provided below.

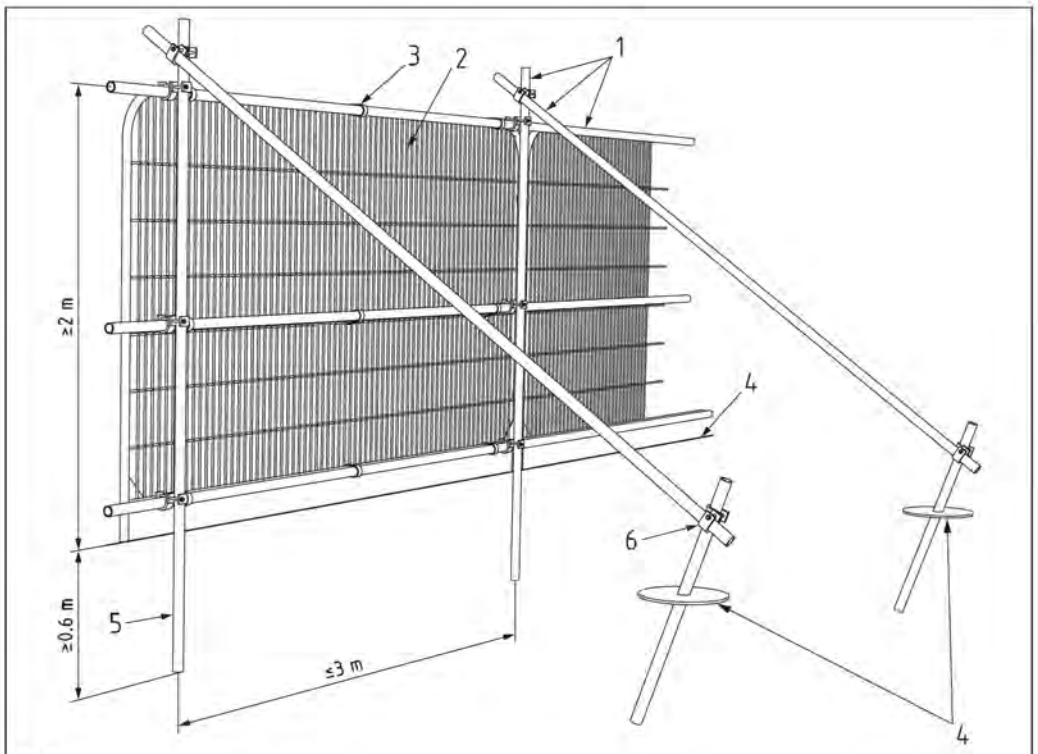

Key

1 Standard scaffold poles
2 Heavy gauge 2 m tall galvanized tube and welded mesh infill panels
3 Panels secured to uprights and cross-members with wire ties
4 Ground level
5 Uprights driven into the ground until secure (minimum depth 0.6 m)
6 Standard scaffold clamps

5.3 In addition to habitat creation through a planting scheme, faunal enhancements shall be provided in the form of Bird Nest Boxes, Bat Boxes and Dormice Nest Boxes at the locations

shown on the CH018-002 LEMP PLAN, and as illustrated in the CH018-001 Landscape Strategy. Bat boxes are to be located in trees that have been identified as having bat roost potential. The bat roost potential plan can be found in the appendices.

5.4 Maintenance of the landscape areas shall be undertaken by a competent landscape contractor (as appointed by the Management Company), registered with the British Association of Landscape Industries (BALI). For the purposes of this report the appointed landscape contractor is referred to as 'The Contractor.'

5.5 Maintenance visits shall be undertaken at minimum monthly intervals (i.e. 12 visits per year). Visits may need to be increased at certain times of the year to enable the operations set-out within the report to be properly executed.

At each visit the following operations shall be undertaken:

- Regularly litter pick entire site to ensure that all planting and amenity areas are kept free from litter;
- Rake-up any leaf litter and remove from site;

Ensure that all adjacent areas affected by maintenance operations are protected using boards or tarpaulins.

Undertake weeding of planted areas;

Undertake watering (as required) to ensure healthy growth /establishment of plant stock especially during the summer months (May to Aug) or during periods of prolonged drought where more frequent visits may be required;

Sweep all communal hard surfaces to ensure they are kept free from litter and leaves; and

Undertake all the necessary landscape maintenance outlined in the following sections.

5.6 All tree surgery works shall be undertaken in accordance with the requirements of BS 3998:2010 'Tree Work – Recommendations', by a suitably qualified arboricultural contractor, registered with the Arboricultural Association.

5.7 Any pruning or removal works to existing vegetation that may arise, including shrubs, hedges and trees, should be undertaken outside of the bird nesting season to ensure that breeding birds are not disturbed. The bird nesting season is taken to be March to August inclusive. Where

this is not possible, an ecologist will need to check for nesting birds prior to commencement of works.

5.8 All soft landscape areas will be maintained to BS7370-4:1993.

5.9 All new planting will be maintained in accordance with good horticultural practice to ensure the thriving of individual species.

5.10 Topsoil shall be in accordance with BS3882;2015 'Specification for topsoil for trees and shrubs'. 300mm depth of topsoil shall be provided (150mm for grass) with suitable loosened subsoil to provide the remainder of the minimum rooting depth.

5.11 The Contractor shall maintain the whole of the Site in accordance with the schedules and specification included within this document. The landscape maintenance is to be carried out to a high standard at all times.

5.12 A record or log of all maintenance visits should be undertaken by the Contractor and these should be collated on a six-monthly basis and submitted to the Management Company for review.

5.13 The Contractor shall ensure that any chemical application is undertaken only as a last resort and only by trained staff / operatives only, who have the appropriate NPTC certificates and in accordance with the manufacturer's recommendations. The 'Code of Practice for the Safe Use of Pesticides for Non-Agricultural Purposes' will be observed where applicable. The use of any chemicals shall be noted on the record sheets as outlined above. No chemical applications may be made to the open space or boundary vegetation areas due to the presence of protected species.

5.14 The Contractor should ensure that the Site is left in a tidy and safe state following the undertaking of works outlined in the enclosed schedules and this shall be at the end of the day of each visit. All arising's should be removed from site in accordance with the schedules.

5.15 The Contractor shall programme and vary their agreed time of visits to coincide with appropriate weather conditions for carrying out of operations. The mowing of grass during excessively wet weather or following periods of extended rain is strictly prohibited.

5.16 The Contractor should notify the Management Company to any significant pest or disease problem affecting the planted stock and shall provide a suitable strategy for treatment to be agreed with the client.

5.17 The Contractor shall advise the Management Company of all trees and other plants found to be dead, dying, vandalised or suffering significantly from the current growing conditions. All failed / defective plants identified within the first 12 months of installation should be replaced by the contractor at the soonest available planting season to ensure a continued coverage of growth. Replacement plants should be of the same species and specification of the failed specimens.

5.18 Chipping and shredding is not permitted on site without prior consent.

5.19 Should mammalian pests become a significant problem on site, then proposals for their control / eradication should be submitted for approval.

5.20 The contractor shall ensure that a suitable water supply is available to carry out the operations detailed in this document. In the event of water restrictions (e.g. drought), the contractor will be responsible for submitting proposals to the Management Company for an alternative source of water e.g. use of a trailer mounted bowser.

5.21 For the duration of the works the Contractor shall keep the site free from injurious weeds as listed in the Weeds Act 1959.

5.22 Any hard surfacing adjacent to management areas are to be protected from damage by machinery including mowers, with surface debris swept after each visit.

5.23 Management should also have regard to potential harm to reptiles through ground disturbance, and hibernation periods.

6.0 PRESCRIPTIONS FOR MANAGEMENT ACTIONS

6.1 EXISTING TREES

Objectives

6.1.1 To maintain and enhance the biodiversity value of existing trees on the site

6.1.2 Management of existing trees for safety, and to maintain healthy growth, attractive form and promote longevity. Trees are located around the site boundary, and any management should be minimal and aimed at maintaining health and promoting longevity. The trees, shrubs and ruderal vegetation around the site boundary form Dormice habitat. Generally, the habitat should go undisturbed, although there may be need for formative pruning to prevent branches from overhanging paths or boundaries. There should be no pruning of trees and shrubs to less than 50cm above ground level. Tree canopies should be intelinking with shrub and ruderal vegetation below for the benefit of dormice.

Prescription

6.1.3 In year 1 and 4 of this management plan, all existing trees will be inspected for defects and damage by a suitably qualified arboriculturist.

6.1.4 Retained trees will be monitored for any sign of defects or poor health, and any signs of ill health or damage will be noted, and remedial action taken when required.

6.1.5 Routine pruning of mature trees should be carried out only in exceptional circumstances if a health and safety issue is identified or if required for the benefit of the tree's health.

6.1.6 Tree work should be carried out in accordance with BS 3998 and the Health and Safety Executive (HSE) 'Forestry and arboriculture safety leaflets'. Branches should be cut in accordance with the Arboricultural Association Leaflet 'Mature tree management'

6.2 PROPOSED TREE PLANTING

Objectives

6.2.1 To provide biodiversity value, landscape structure and visual interest.

6.2.2 To ensure new tree planting is suitably cared for to enable its successful establishment, and to promote healthy growth and attractive form.

Prescription

6.2.3 All trees will be planted into well prepared ground in accordance with good horticultural practice.

6.2.4 Stakes and ties to trees will be inspected twice yearly or after severe weather and firmed in and re-tied as necessary. Stakes and ties shall be removed as soon as trees are self-supporting.

6.2.5 Trees shall be re-firmed in the ground after strong winds, frost heave or other disturbances.

6.2.6 Failed tree planting shall be replaced in the next available planting season: between October and March.

6.2.7 Trees should be routinely inspected (quarterly) for pests and diseases and any remedial action taken swiftly to prevent the spread of disease and control pests.

6.2.8 Watering programme should be monitored to ensure that at times of water shortage (e.g., drought) sufficient water is applied to allow successful establishment and healthy growth.

6.2.9 An annual review of new tree planting will identify any formative pruning needed such as removing dead branches and reducing selected side branches, ensuring development of a single strong leader. Pruning should be carried out in accordance with BS 7370-4. Where applicable, crowns should be selectively lifted to ensure visibility across the highway verges and to allow safe passage of adjacent vehicles.

6.2.10 The mulch layer at the base of each tree shall be maintained by annual topping-up to a depth of 75mm to a diameter of 1.2m around the trunk, leaving a collar of 10-12cm around stem clear of mulch to prevent trunk from rotting.

6.3 SHRUB AND RUDERAL VEGETATION GROWING ALONG THE SITE BOUNDARIES

Objectives

6.3.1 To protect and maintain existing scrub and ruderal vegetation as dormice habitat.

Prescription

6.3.2 The existing scrub and ruderal vegetation will be monitored for any sign of defects or poor health annually or after severe weather. Any signs of ill health or damage will be noted and remedial action taken when required.

6.3.3 Formative pruning to prevent encroaching will be undertaken every two years in January to February (outside of the bird nesting season). The trees, shrubs and ruderal vegetation along the site boundaries are Dormice habitat. Any pruning should be undertaken with hand tools and no vegetation should be cut to less than 50cm above ground level in order to protect hibernating dormice. Arisings to be removed.

6.3.4. The vegetation on the site boundary should be maintained so that that the shrub layer connects with the tree canopies above. This will provide a three dimensional connective habitat for dormice allowing them to access from the ground layer up into the tree canopy above.

6.4 MAJORITY NATIVE SHRUB PLANTING AND NEW HEDGROWS

6.4.1 Majority native shrub planting is provided in the open space area and along the northern and eastern site boundaries. The majority native shrub mix is intended to provide habitat for wildlife, particularly badgers and dormice. The native shrub mix should be maintained so that it provides a reasonably continuous and interconnected three dimensional framework through which dormice can travel without having to cross on the ground. Pruning works should not seek to separate areas. The objective is to join the shrub planting with the existing vegetation on the site boundary so that it forms a connected habitat. New hedgerows form the front boundaries of plots and should be kept neatly clipped.

Objectives

6.4.2 To ensure new planting is suitably cared for to enable its successful establishment and to create suitable habitat for foraging badgers, and for dormice.

Prescription

6.4.3 All planting to be conducted in accordance with the drawings at Appendix A.

6.4.4 Shrub and hedgerow planting will be watered as needed to ensure successful establishment and healthy growth. Each watering will be in sufficient quantity to ensure that the full depth of topsoil is saturated.

6.4.5 Hedges will be pruned and re-shaped at the appropriate time according to individual requirements and good horticultural practice. Hedges on plot boundaries will be maintained at a height of between 0.8m and 1.2m.

6.4.6 The majority native shrub and tree planting matrix is designed as habitat for badgers and dormice. Pruning may be required to prevent encroaching on paths, but otherwise it would be allowed to develop into an interlocking matrix of branches through which wildlife can travel.

6.4.7 Regularly check for plantings which have been loosened by wind or frost and re-firm any loose plants back into the ground.

6.4.8 Monitor and replace failed hedging with new equivalent plants between October and March. Replace failed native shrub matrix planting after April, once dormice have emerged from hibernation. All plants should be maintained in a disease and pest free state.

6.5 GRASSLANDS

6.5.1 AMENITY GRASS AREAS

6.5.2 The proposed scheme includes areas of short mown amenity grassland (species rich flowering lawn) on plot frontages and on grassed roadside verges throughout the site.

Objectives

6.5.3 To provide areas of short mown amenity grassland to provide setting to plots and streetscapes.

6.5.4 To ensure that verges are maintained so as to contribute to the visual amenity of the development.

Prescriptions

6.5.5 Following initial seeding/, provide appropriate signage to discourage entrance for a minimum of 6 weeks or until the grass sward is suitably established to withstand footfall.

6.5.6 Allow amenity seeded areas to establish to a minimum height of 35mm before first cut. For species rich amenity mix areas, mowing should be continued throughout the first season every 1-2 weeks to control weed growth until the sward is established.

6.5.7 For roadside verges, once established, maintain to a height of 25-4mm by cutting fortnightly or as necessary through the growing season and as required during the winter months (to maintain to approx. 30mm). Arisings to be collected and removed from site.

6.5.8 Remove all litter including fallen leaves from grass areas prior to mowing. Do not use mowers/strimmers within 100mm of tree stems, use nylon filament rotary cutters or other hand held machinery to avoid damage to bark. Strim around any obstructions.

6.5.9 All verges should receive an application of a proprietary granular slow-release fertiliser twice yearly in the spring and the autumn.

6.5.10 A selective herbicide should be used in order to suppress any emerging perennial weeds.

6.5.11 Edges adjacent to footpaths should be reformed and left neat after each maintenance visit.

6.5.12 Bare areas and areas of dead grass which become apparent should be rectified by over-seeding and/or turf re-installation at the soonest available planting season.

6.6 NATIVE WILDFLOWER MEADOW AREAS

6.6.1 The proposed scheme includes areas of native wildflower grassland meadows in the northern open space and along the Public Right of Way along the Western site boundary.

6.6.2 The wildflower meadow areas will be sown onto well-prepared soil with a seed mix as detailed in the Landscape Strategy, in accordance with the supplier's recommendations.

Objectives

6.6.3 To provide areas of species-rich meadow to provide visual interest for local residents and maximise biodiversity value; particularly for pollinators and invertebrates.

6.6.4 Apply a mowing / cutting regime suitable to the species mix.

6.6.5 To provide nectar and food-plants for wildlife.

6.6.6 Control the establishment of perennial and arable weeds, particular dock, nettle and thistle, through intensive management to ensure species do not dominant the newly created sward.

Prescriptions

6.6.7 Allow wildflower meadow areas to establish to a minimum height of 100 mm before first cut. For the first year it should be maintained at this height between April and October through

regular cuts (minimum monthly) to control weed growth and allow for the slower growing perennial wildflowers to establish.

6.6.8 For the second year a regular cutting to maintain a grass height of approximately 100mm should continue from April till May, at which point the sward should be left to establish to a greater height, before 2 further cuts in late July and Sept down to 100mm.

6.6.9 The third year onwards a bi-annual regime will be implemented with the grassland cut to a height no lower than 100mm in in July and September to maximise vascular plant vitality.

6.6.10 Regularly inspect grassland areas for weeds / invasive species and remove by hand.

6.6.11 All cuttings will be left in-situ for 24 hours after being cut to allow for any wildlife to disperse. Arisings will then be removed from the area to reduce nutrient build-up which would encourage the development of more vigorous plant species.

6.6.12 Bare areas and areas of dead grassland, which become apparent, should be rectified by over-seeding with the proposed seed mixes at the next available seeding season.

6.6.13 In newly created meadows areas where wildflower uptake is low, additional scarifying of the ground should take place in the second or third autumn period and additional wildflower seeding, including Yellow Rattle to be sown to try to reduce grass vigor.

6.7 ATTENUATION BASIN

Objectives

6.7.1 In drainage terms, the short-term objectives are to ensure satisfactory establishment and stabilisation of the attenuation basin.

6.7.2 The medium to long-term objectives are:

- Maintaining public safety.
- To maintain an efficient drainage system.
- To manage and develop the visual amenity of the attenuation habitat by maintaining the wet grassland meadow within.
- To encourage the development of ecological interest, in so far as can be achieved.
- The attenuation basin will require routine inspections and periodic maintenance in accordance with the following guidance; ‘CIRIA document C753, ‘The SUDS Manual’, London 2015. ‘

6.7.3 To create an attractive and interesting feature which has landscape, amenity and ecological value as well as maintaining an attenuation function.

Prescriptions

6.7.4 The attenuation area will be seeded with a wet native meadow grassland mix specifically designed for this function and managed as follows;

- Year 1 – Following establishment, once the sward has reached 100mm, it should be maintained at this height between April and October through regular cuts (minimum monthly) for the first growing season to control weed growth and allow for the slower growing perennial wildflowers to establish.

- Year 2 – Regular cutting to maintain a grass height of approximately 100mm should continue from April till May, at which point the sward should be left to establish to a greater height, before 2 further cuts in late July and Sept down to 100mm.

- Year 3 onwards - A bi-annual regime will be implement the grassland cut to a height no lower than 100mm in in July and September to maximise vascular plant vitality.

6.7.5 The basin will be regularly inspected for weeds / invasive species. These shall be removed by hand .

6.7.6 All cuttings will be left in-situ for 24 hours after being cut to allow for any wildlife to disperse.

6.7.7 Inlets and outlets should be checked regularly for build-up of litter / sediment and cleared as required.

6.7.8 Any bare patches that emerge within the grassland sward should be over-seeded with the proposed seed mixes at the next available seeding season to prevent soil erosion.

6.7.9 An annual inspection should be carried out to check for any silt build-up / vegetation around drainage components and be removed if required.

6.8 HARD LANDSCAPE AREAS

6.8.1 A network of footpaths and associated hard landscape areas will be installed. The Public Right of Way on the Eastern site boundary will be surfaced with hoggin.

Objectives

6.8.2 To provide a network of suitably maintained footpaths and hard landscape areas.

Prescription

6.8.3 Footpaths will be kept clear, and level / accessible so that they provide safe and legible routes.

6.8.4 Brick, railed or fenced boundaries to communal areas shall be inspected once per year and repaired or replaced as necessary.

6.9 FAUNAL ENHANCEMENTS

6.9.1 Bird Next Boxes, Bat Boxes, Dormice Nest Boxes and Hibernacula are located in existing vegetation around the site boundary.

Objectives

6.9.2 To provide nesting / roosting options for Birds, Bats and Dormice

Prescription

6.9.3 Boxes will be checked on an annual basis, during the summer months and re-fastned to trees or be repaired / replaced as needed. Hibernacula will be topped up during the summer months and as indicated on the diagram in CH018-Landscape Strategy.

6.10 LAP PLAY AREA

Prescription

6.10.1 **Installation Inspection**

The LAP Play area including fencing, seating, and signage will be carefully checked for compliance with specifications and installation procedures according to RoSPA Standards before being accepted.

An annual inspection will also be undertaken in accordance with EN1176, Part 7 to include the whole play area site.

7 MAINTAINTENANCE SCHEDULE

GENERAL MAINTENANCE SCHEDULE

12.1 A schedule of work is provided in the following tables, giving a timetable for management actions for the duration of the development.

	Maintenance Operation	**Year 1**	**Year 2**	**Year 3**	**Year 4**	**Year 5**
A	Undertake watering as required to ensure healthy establishment of all plant stock and on a monthly basis from May to August.	May-Aug As req.	May-Aug As req.	May-Aug As req.	May-Aug As req.	May-Aug As req.
B	Remove all arisings from maintenance operations	As req.	As req.	As req.	As req.	As req.
C	Ensure all planted areas are kept weed free; no weed cover to exceed greater than 5% in area or 300mm in height.	As req.	As req.	As req.	As req.	As req.
D	Re-instate any failed plant stock to agreed specification as agreed with client; incl for top dressing with slow release fertiliser @ 50g/m2	As req.	As req.	As req.	As req.	As req.
E	Ensure all hard surfaces are kept free from litter / leaves and sweep as required.	As req.	As req.	As req.	As req.	As req.
F	Rake-up fallen leaf litter; remove from site	Sept-Dec As req.	Sept-Dec As req.	Sept-Dec As req.	Sept-Dec As req.	Sept-Dec As req.
G	Ensure all plants are maintained disease and pest free through the application of a suitable proprietary herbicide / pesticide. (Pesticides should only be used in site boundary areas as a last resort).	As req.	As req.	As req.	As req.	As req.

EXISTING TREE MAINTAINCE SCHEDULE

	Maintenance Operation	Year 1	Year 2	Year 3	Year 4	Year 5
A	Monitor mature trees for signs of defects / poor health. Take remedial action only if required on the grounds of health and safety / condition.	As part of regular visits	As part of regular visits	As part of regular visits	As part of regular visits	As part of regular visits
B	Undertake full review of all retained trees for signs of defects and damage requiring action.	Inspect	-	-	Inspect	-

NEW TREE PLANTING MAINTENANCE SCHEDULE

	Maintenance Operation	Year 1	Year 2	Year 3	Year 4	Year 5
A	Inspect tree stakes / ties / guards and replace/remove as required.	Monthly	Monthly	Monthly	Monthly.	Monthly.
B	During excessive hot weather spray crowns	As req.	As req.	As req.	As req.	As req.
C	Supply & apply slow-release organic fertilizer to base of each tree; 50g per tree.	Annually Mar-Apr	Annually Mar-Apr	Annually Mar-Apr	Annually Mar-Apr	Annually Mar-Apr
D	Following strong winds, re-firm base and check stakes / ties for stability.	As req.	As req.	As req.	As req.	As req.
E	Undertake formative pruning of young trees to encourage good growth and shape.	Annually as required Oct-Nov	Annually as required Oct-Nov	Annually as required Oct-Nov	Annually as required Oct-Nov	Annually as required Oct-Nov
F	Monitor and replace failed trees and replace with new trees into prepared ground	Oct-Mar As req.	Oct-Mar As req.	Oct-Mar As req.	Oct-Mar As req.	Oct-Mar As req.

G	Top of mulch layer at base of tree; 1.2m diam. x 75mm depth. Leave a collar of 10-12cm around stem clear of mulch to prevent trunk from rotting.	Annually Sept	Annually Sept	Annually Sept	Annually Sept	Annually Sept
H	Trees to be routinely inspected for pests / disease	At least Annually	At least Annually	At least Annually	At least Annually	At least Annually

EXISTING SCRUB AND RUDERAL VEGETATION GROWING ALONG THE SITE BOUNDARIES MAINTENANCE SCHEDULE

	Maintenance Operation	**Year 1**	**Year 2**	**Year 3**	**Year 4**	**Year 5**
A	Pruning to prevent overhanging of paths and plot boundaries.	September Annually as required	September Annually as required	September Annually as required	September Annually as required	September Annually as required
B	Planting of native shrubs as needed to maintain an interconnected branching understorey suitable for dormice. (Works must not be undertaken between late autumn and spring when dormice are likely to be hibernating close to ground level.	September Annually as required	September Annually as required	September Annually as required	September Annually as required	September Annually as required

NEW MAJORITY NATIVE TREE AND SHRUB MATRIX PLANTING

	Maintenance Operation	**Year 1**	**Year 2**	**Year 3**	**Year 4**	**Year 5**
A	Inspect tree stakes / ties / guards and replace/remove as required.	Monthly	Monthly	Monthly	Monthly.	Monthly.
D	Following strong winds, re-firm base and check stakes / ties for stability.	As req.	As req.	As req.	As req.	As req.

C	Undertake formative pruning to prevent overhanging of paths to LAP	September Annually as required	September Annually as required	September Annually as required	September Annually as required	September Annually as required
D	Monitor and replace failed planting and replace with new to same specification into prepared ground	September Annually as required	September Annually as required	September Annually as required	September Annually as required	September Annually as required
E	Inspect for pests and diseases	At least Annually	At least Annually	At least Annually	At least Annually	At least Annually
F	Coppice planting below the canopies of fruit trees to 50cm above ground level on a 5 yearly basis					5 Yearly September

ORNAMENTAL SHRUB PLANTING AND NEW HEDGING MAINTENANCE SCHEDULE

	Maintenance Operation	**Year 1**	**Year 2**	**Year 3**	**Year 4**	**Year 5**
A	Tidy up all planting areas removing rubbish, litter from planting beds.	Each visit	Each visit.	Each visit	Each visit	Each visit
B	Re-cultivate around base of plants s by light hoe to relieve soil compaction.	4 times Apr-Oct	4 times Apr-Oct	4 times Apr-Oct	4 times Apr-Oct	4 times Apr-Oct
C	Supply & apply slow release fertiliser to planting areas; 60g/m2.	Annually Mar/Apr	Annually Mar/Apr	Annually Mar/Apr	Annually Mar/Apr	Annually Mar/Apr
D	Undertake formative pruning of plants, to encourage growth and promote good form.	Annually, as required Sept-Jan	Annually, as required Sept-Jan	Annually, as required Sept-Jan	Annually, as required Sept-Jan	Annually, as required Sept-Jan

E	Maintain front boundary hedges at a height of 80cm, neatly clipped into an A shape.	2 times May / October	2 times May / October	2 times May / October	2 times May / October	2 times May / October
F	Remove any dead plant material at the end of the growing season.	Annually, as required Sept/Oct	Annually, as required Sept/Oct.	Annually, as required Sept/Oct	Annually, as required Sept/Oct	Annually, as required Sept/Oct
G	Supply & apply selective herbicide to manufactures recommendations; to base of transplants if needed	Annually, Sept/Oct	Annually, Sept/Oct	Annually, Sept/Oct	-	-
H	Following strong winds, re-firm loose plants back into the ground	As req.	As req.	As req.	As req.	As req.

AMENITY GRASSLAND MAINTENANCE SCHEDULE

	Maintenance Operation	**Year 1**	**Year 2**	**Year 3**	**Year 4**	**Year 5**
A	Tidy up all grass areas removing rubbish, litter.	Each visit	Each visit	Each visit	Each visit	Each visit
B	Growing Season (Species Rich Areas): Maintain amenity grass at height of 30-40mm and trim / re-form edges.	Regular cuts down to 30-40mm every two weeks	Apr-June Aug - Oct	Apr-June Aug - Oct	Apr-June Aug - Oct	Apr-June Aug - Oct
C	Dormant Season (Species Rich Areas): Maintain amenity grass at height of 40mm and trim / re-form edges.	As above	Mar-Apr & Oct-Nov	Mar-Apr & Oct-Nov	Mar-Apr & Oct-Nov	Mar-Apr & Oct-Nov
D	Remove fallen leaves from grassed areas; as required	Sept-Nov	Sept-Nov	Sept-Nov	Sept-Nov	Sept-Nov
E	Supply & apply selective herbicide to manufactures	Annually Sept/Oct	Annually Sept/Oct	Annually Sept/Oct	Annually Sept/Oct	Annually Sept/Oct

	recommendations; to all grassed areas.					
F	Supply & apply slow-release lawn fertilizer Spring: 15:10:10 fertilizer @35g/m2 Autumn: 5:10:10 fertilizer @ 50g/m2	Twice annually; Mar/Apr & Oct/Nov	Twice annually; Mar/Apr & Oct/Nov	Twice annually; Mar/Apr & Oct/Nov	Twice annually; Mar/Apr & Oct/Nov	Twice annually; Mar/Apr & Oct/Nov
G	Over-seed patchy areas; as required	Annually Sept/Oct	Annually Sept/Oct	Annually Sept/Oct	Annually Sept/Oct	Annually Sept/Oct

NATIVE WILDFLOWER GRASSLAND MEADOW / ROUGH GRASSLAND

	Maintenance Operation	**Year 1**	**Year 2**	**Year 3**	**Year 4**	**Year 5**
A	Tidy up all grass areas removing rubbish, litter.	Each visit	Each visit	Each visit	Each visit	Each visit
B	Maintain wildflower grassland at height of not less than 100 mm Arisings left in-situ for 24 hours afterwards rake up arisings and contribute to hibernacula or dispose off site.	Monthly cuts to maintain 100mm sward height Apr-Oct	Regular cuts to maintain 100mm sward height Apr-Oct. 2 further cuts late July & Sept to 100mm	Twice annually; Jul/Sept	Twice annually; Jul/Sept	Twice annually; Jul/Sept
C	Rough grassland to be allowed to regenerate into the woodland edge, annual inspection required.	Annually Sept	Annually Sept	Annually Sept	Annually Sept	Annually Sept
D	Over-seed patchy areas; as required	Annually Sept/Oct	Annually Sept/Oct	Annually Sept/Oct	Annually Sept/Oct	Annually Sept/Oct

WET MEADOW GRASSLAND IN ATTENUATION BASIN

	Maintenance Operation	Year 1	Year 2	Year 3	Year 4	Year 5
A	Wildflower seeding to banks and base; cutting regimes Arisings left in-situ for 24 hours	Monthly cuts to maintain 100mm sward height Apr-Oct	Regular cuts to maintain 100mm sward height Apr-Oct. 2 further cuts late July & Sept to 100mm	Bi-annual cuts to 100mm in July & Sept	Bi-annual cuts to 100mm in July & Sept	Bi-annual cuts to 100mm in July & Sept
B	Monitor planting for excessive growth around headwalls; manage as required through cutting	-	-	As required	As required	As required
C	Remove litter from within basin. Clear inlets and outlets from litter / sediment	As required	As required	As required	As required	As required
D	Repair any erosion or other damage by re-seeding and re-level uneven surfaces and reinstate design levels	As required	As required	As required	As required	As required

HARD SURFACING, FOOTPATHS, LAP, BOUNDARY TREATMENTS TO COMMUNAL AREAS, BIRD, BAT AND MOUSE BOXES, HIBERNACULA

	Maintenance Operation	Year 1	Year 2	Year 3	Year 4	Year 5
A	Cut back undergrowth, overgrowing or overhanging shrubs, hedges and minor tree branches from any pathways to maintain an unobstructed width of at least 2m or the width of the pathway whichever is greater.	Twice annually; Mar/Aug	Twice annually; Mar/Aug	Twice annually; Mar/Aug	Twice annually; Mar/Aug	Twice annually; Mar/Aug

B	Removal of weeds by hoeing, pulling or by use of approved herbicide	Mar, Jun, Sept, Dec	Mar, Jun, Sept, Dec	Mar, Jun, Sept, Dec	Mar, Jun, Sept, Dec	Mar, Jun, Sept, Dec
C	Removal of litter, grit, mud and leaf litter and plant debris by sweeping	Mar, Jun, Sept, Dec	Mar, Jun, Sept, Dec	Mar, Jun, Sept, Dec	Mar, Jun, Sept, Dec	Mar, Jun, Sept, Dec
D	Carry out repairs to surfaces (all hard surfaces must be kept safe to walk on during prolonged freezing conditions using grit rather than salt)	Each visit	Each visit	Each visit	Each visit	Each visit
E	Check nest boxes and refasten, repair and replace as necessary	Once, August	Once, August	Once, August	Once, August	Once, August
F	Hoggin paths; Repair dips and potholes so that paths are slightly cambered for good drainage, and so that the surface is evenly graded and without trip hazards. Repair by breaking out the surface course of the affected area, and repairing the build-up layers as needed. Thoroughly compact all layers using a whacker plate or other suitable compacting machine, including the replaced surface layer and check the integrity of timber edgings. Replace and replace timber edgings where needed. All materials used must be to the original specification. Test for positive drainage to adjoining soft landscape areas with bucket of water.	Once, August	Once, August	Once, August	Once, August	Once, August
G	**LAP; Installation Inspection** New playground equipment including fencing, seating, and signage will be carefully checked for compliance with specifications and installation procedures before being accepted.	At completion				

	Annual Inspection; The LEAP play area will undergo an independent annual inspection must be undertaken in accordance with EN1176, Part 7, to include the whole play area site including pathways, fences and furniture, as well as the fixed play equipment and safety surfacing. The surfacing should be subject to an impact absorbency test. This should be carried out by a specialist not connected with the playground operator or manager. Checks must be made for vandalism, minor and major wear, and structural soundness. Such inspections are offered by insurance companies, playground equipment manufacturers, commercial companies and safety organisations, such as RoSPA. A report must be submitted including a checklist of all items with notes, including a risk assessment of any non complying items and a list of measures required to maintain their level of safety and performance. Results of the following questions must be recorded for all elements; Are any of the fixings (nuts, bolts, screws) loose? Are any of the fixings missing? Are any of the parts worn? Does the moving part fixing point require lubrication? Are the foundations of the equipment secure and firm?	Annually, 12 months after completion				

	Are the foundations of the equipment protruding from the surrounding surface? Are any parts of the equipment loose that were once secure? Have any parts of the equipment started to rot or rust? Have any parts of the equipment been damaged by vandalism?					
H	**Boundary Treatments to Communal Areas.** Hedge boundaries shall be maintained as described above. Brick, railed or fenced boundaries shall be inspected once per year and repaired or replaced as necessary.	Annually, 12 months after completion				

8 DETAILS OF THE ORGANISATION OR BODY RESPONSIBLE FOR IMPLEMENTATION

Following the initial maintenance period outlined above (12 months), all management contained within this report will be undertaken by an appointed site-wide Management Company.

8.1 The appointed Management Company will be set-up on behalf of future residents and land-owners by the lead developers for the Site and will be funded in the long-term by annual payments made by future occupiers of the Site.

8.2 The appointed Management Company structure should be set-up in such a way that funds are allocated for both the regular maintenance of the Site, in line with this report, and a capital works fund or 'sinking fund' created to allow for any identified remedial works to be undertaken, for example in areas where initial planting has failed to establish post 12 months' defects.

8.3 Once the exact details of the appointed Management Company are known, these details should be made available to the Local Authority, along with confirmation that the management company will be responsible for the maintenance of the landscaped areas as set-out in this report.

8.4 The management and maintenance works will be carried out for the duration of the development.

9 ONGOING MONITORING AND REMEDIAL MEASURES

9.1 The management company will undertake an annual inspection of the site, to ensure that all areas are being managed as specified.

9.2 Landscape and open space is a complex, living entity. Any management plan should have built in review periods to assess its ongoing suitability to the evolving landscape. A 5 yearly review will be undertaken for this purpose.

9.3 The appointed Management Company shall develop and evolve the landscape management to suit the emerging site conditions and to remedy any issues identified by this annual review.

APPENDIX A

Drawing Schedule:

- CH018-002 LEMP Plan
- LLD1167-ARB-DWG-004 Bat Roost Potential Plan (Lizard Landscape Design and Ecology)
- Management Plan (Croudace Homes Group)

Storrington | LANDSCAPE AND ECOLOGICAL MANAGEMENT PLAN

Details for Management and Maintenance of the Landscape Scheme are provided in the Landscape and Ecological Mitigation Plan Document

Please refer to (CH018-003 LEMP)


Attenuation basin with marginal planting
Central permanent water area
L.A.P.
Small patch of existing scrub to be retained
X
S
X
*
*
*

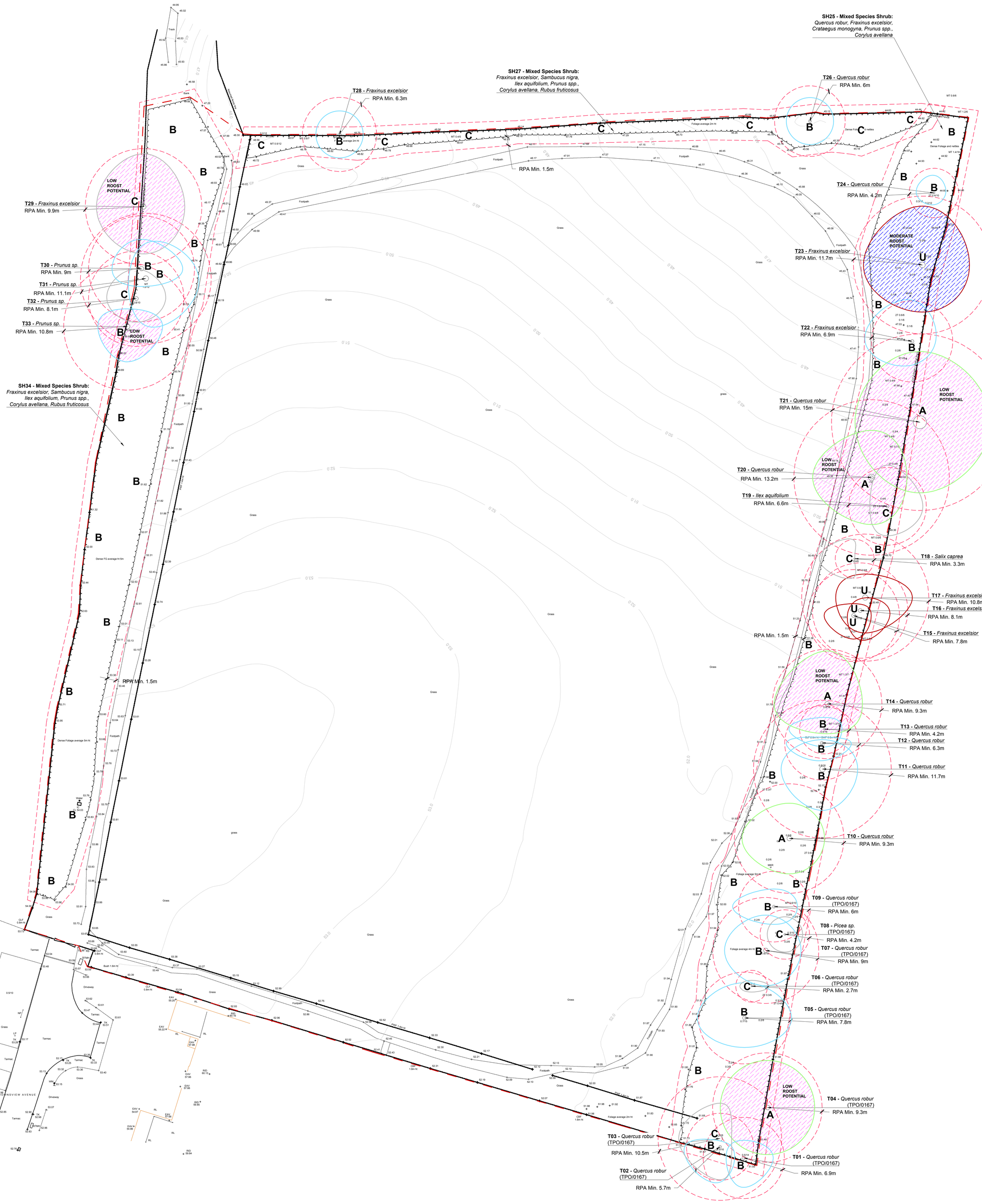

Bat Roost Potential Plan
Land at Downsview Avenue, Storrington, West Sussex

Legend

- **Site Survey Boundary.**
- T/ SH — **Tree/ Shrub Group/ Identification Label.**
- **Moderate Bat Roost Potential.**
- **Low Bat Roost Potential.**
- **Tree Root Protection Areas**
  Tree Root Protection Areas calculated and specified in accordance with *BS 5837:2012 - 'Trees in Relation to Design, Demolition and Construction - Recommendations'.*
- A ○ — **Category A Trees**
  Trees of High Quality and Value.
- B ○ — **Category B Trees**
  Trees of Moderate Quality and Value.
- C ○ — **Category C Trees**
  Trees of Low Quality and Value.
- U ○ — **Category U Trees;**
  Trees Retained for habitat purposes.
- **Existing Shrub Groups.**

Notes:
Drawing to be viewed in colour.
Refer to:
- Bat Survey by The Ecology Partnership;
- LLD1167-ARB-SCH-001 - Existing Tree Schedule and Schedule of Tree Works;
- LLD1167-ARB-DWG-002 - Tree Retention and Protection Plan - Vegetation Clearance;
- LLD1167-ARB-DWG-003 - Tree Retention and Protection Plan - Construction Phase;
- LLD1167-ARB-REP-001 - Arboricultural Impact Assessment and Method Statement.

PLANNING ISSUE

Rev	Description	Date	Initials
01	Planning Issue	03.12.19	TT
00	Planning Issue	28.11.19	TT

LIZARD
Landscape Design and Ecology
The Old Bank, 34 South Street, Tarring, Worthing, West Sussex, BN14 7LH
T. 01903 216033 E. lizard.landscape@btconnect.com W. lizardlandscapeecology.com

Client
Welbeck Land
Project Title and Location
Land at Downsview Avenue
Storrington, Horsham, West Sussex
Drawing Title
Bat Roost Potential Plan

Scale	*Drawn*	*Approved*	*Date*
1:250@A0	TT		28.11.2019

Drawing No **LLD1167-ARB-DWG-004** *Revision* 01

Key

Roads & Hard Standing to be maintained by the Management Company

Open space to be maintained by the Management Company

This management plan is subject to change following detailed design

Plot 56 4 BED
Plot 55 4 BED
Plot 57 5 BED
Plot 58 5 BED
Plot 59 4 BED
Plots 61-62 1 BED
Plot 60 4 BED
Plot 54 4 BED
Plot 52 3 BED
Plot 51 3 BED
Plot 50 3 BED
Plot 49 3 BED
Plot 53 4 BED
Plots 35-42 2 BED
Plots 43-48 1 BED
Plot 32 4 BED
Plot 33 3 BED
Plot 31 3 BED
Plot 30 3 BED
Plot 29 3 BED
Plot 28 3 BED
Plot 34 3 BED
Plot 16 3 BED
Plot 15 4 BED
Plot 17 3 BED
Plot 18 3 BED
Plot 19 3 BED
Plot 27 3 BED
Plot 26 3 BED
Plot 25 3 BED
Plot 20 3 BED
Plot 21 3 BED
Plot 24 3 BED
Plot 22 3 BED
Plot 23 3 BED
Plot 1 3 BED
Plot 2 2 BED
Plot 3 2 BED
Plot 4 2 BED
Plot 5 2 BED
Plot 6 3 BED
Plot 7 3 BED
Plot 8 3 BED
Plot 9 2 BED
Plot 10 2 BED
Plot 11 2 BED
Plot 12 2 BED
Plot 13 4 BED
Plot 14 4 BED

WHITE STORK VALE STORRINGTON

N

1:500 @ A2 0 5 10 15 20 Metres

Croudace HOMES.CO.UK

© Croudace Homes Limited 2020

Revision
1. Reserved Matters Submission. ZW. 21-07-21

Land North of Downsview Avenue, Storrington

Management Plan

Ref: DES/168/110 Rev:1