3 June 2024

Planning Services,
Horsham District Council,
Parkside,
Chart Way,
Horsham,
West Sussex,
RH12 1RL

Andrew Watson
[redacted]
F: 01732 879051

74 High Street
Sevenoaks
TN13 1JR
www.savills.com

Dear Sir/Madam,

ERECTION OF TEMPORARY AGRICULTURAL WORKERS DWELLING– APPLICATION REF: DC/23/0306
Sluetts Farm, Two Mile Ash Road, Horsham, RH13 0LA

Introduction

This Supporting Letter has been prepared to accompany an application for approval of details reserved by condition following approval of application ref: DC/23/0306. The application is submitted to Horsham District Council (HDC) on behalf of Mr. David Exwood, who is a farm tenant of the Christ's Hospital Foundation (CHF). This application seeks to discharge Condition 7.

Condition 7 (Water Neutrality Strategy Evidence)

The condition reads as follows:

*"7 **Pre-Occupation Condition**: No dwelling hereby permitted shall be first occupied until evidence has been submitted to and been approved in writing by the Local Planning Authority that the approved water neutrality strategy for that dwelling has been implemented in full. The evidence shall include the specification of fittings and appliances used, evidence of their installation, details of the rainwater harvesting system installed including a minimum 35 days storage capacity, and completion of the as built Part G water calculator or equivalent. The installed measures shall be retained as such thereafter.*

Reason: To ensure the development is water neutral to avoid an adverse impact on the Arun Valley SACSPA and Ramsar sites in accordance with Policy 31 of the Horsham District Planning Framework (2015), Paragraphs 179 and 180 of the National Planning Policy Framework (2021), and to enable the Local Planning Authority to discharge its duties under the Conservation of Habitats and Species Regulations 2017 (as amended), and s40 of the NERC Act 2006 (Priority habitats & species).

Water Neutrality Evidence

The specification for the fittings and appliances to be used on site for the temporary workers dwelling are set out in Appendix A of this letter.

In terms of the bespoke rainwater harvesting system (RHS), this will be attached to an existing barn at Sluetts Farm, as shown in Figure 1 below. During a 35 day drought, additional water demand across the site due to the proposed development would equate to 7,098.35 l (35 x 202.81 l/d). The total capacity of the system at any given time is 88,000 l (4 x 22,000 l tanks), meaning that there is capacity to offset the additional demand caused

Offices and associates throughout the Americas, Europe, Asia Pacific, Africa and the Middle East.

Savills (UK) Limited. Chartered Surveyors. Regulated by RICS.
A subsidiary of Savills plc. Registered in England No. 2605138. Registered office: 33 Margaret Street, London, W1G 0JD

by the proposed development during a period of drought. If photographic evidence of the installation of the RHS is required to discharge condition 7, this can be provided at later date to HDC, once the submitted pre-commencement conditions have been discharged.

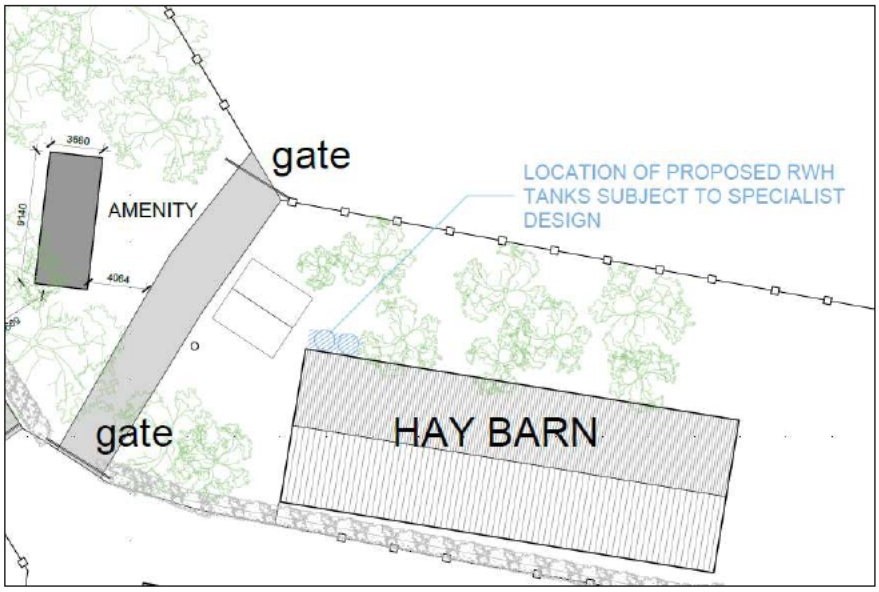

Figure 1: Proposed Location for RWH System

The Part G water calculator was completed as part of the Water Neutrality Statement that accompanied the full planning application (DC/23/0306), please refer to Figure 4 in the approved Statement. The calculation included the fittings and appliances to be used on site as set out in Appendix A of this letter. If a revised Part G calculation is still required, once the water fittings have been installed, this can be provided to HDC in due course once all submitted pre-commencement conditions have been discharged.

Conclusion

I trust that the above is in order and look forward to receiving confirmation that the application has been validated and approved in due course. If you have any queries or require further information, do please get in touch.

Yours sincerely,

[redacted]

Andrew Watson • MRTPI
Director
[redacted]

Toilet Specification

Atlas Trade

SAKKARA CLOSE COUPLED PB CISTERN WITH FITTINGS



Product Code	**SK2WHPCI**
Weight (Kg)	14.2
Material	Vitreous china
Flushing Volume (L)	6/4
Flushing Mechanism	Dual Flush Flush Button
Inlet	RH Bottom Inlet
Cistern fittings included	Yes
Pre-Installed/Bagged	Pre-installed

Key features:

- UKCA compliant
- Smooth modern design
- Water saving option

Description:
A close coupled cistern with smooth lines, it's a family friendly easy clean cistern featuring dual flush push button operation. This cistern is designed to work on either 6/4 ltrs or 4/2.6 ltrs to aid in water saving.

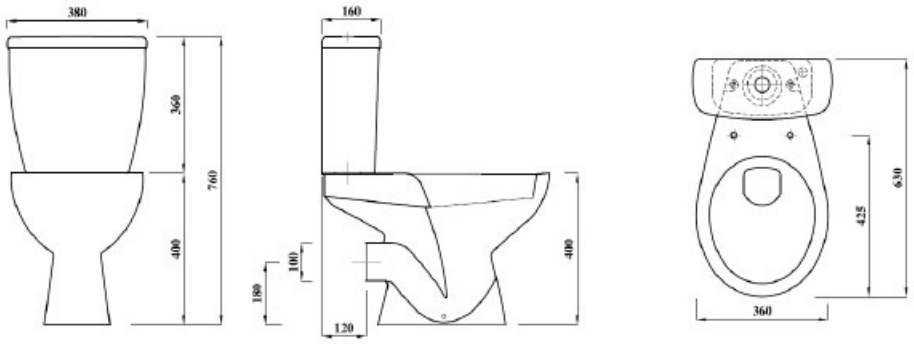

All dimensions are approximate and subject to normal ceramic variation. Although every effort is made not to change the above product specification, Lecico reserve the right to do so without prior notification if necessary. Lifetime ceramic guarantee against manufacturers defects. Full information on guarantees available upon request.

Lecico bathrooms

Kitchen Tap Specification

PEGLERFLOW

4J4011 – MONO SINK MIXER

Francis Pegler BY COMAP



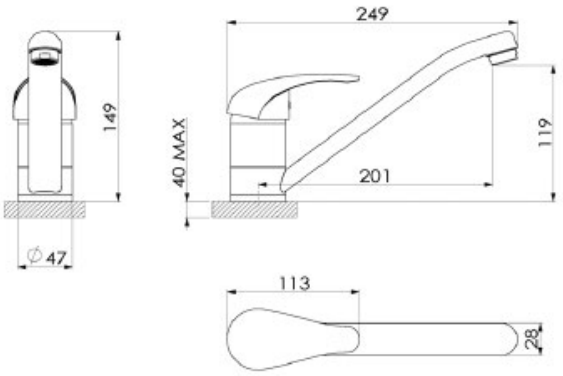

Specification	
Finish	Chrome
Body	Brass
Fittings	Metal plate, washer, stud & locking nut
Connection	M10 – DN8 flexible hoses with ½" BSP threaded ends
Min dynamic pressure	0.1
Max dynamic pressure	6
Max static pressure	16
Max water temperature	60°C

Flow rates				
Pressure	0.1	0.5	1	3
L/min	2.3	9.4	13.9	25.4

All Pressures are in Bar.

Dimensions supplied are nominal and subject to tolerance.

Inclusion of aerator (if supplied) or restrictors (sold separately unless stated) will affect flow rate result.

Performance details are based on trials under test conditions and for guidance only.

The Company reserves the right to change product specification without prior notice.

Features & Benefits

- 10 YEAR Guarantee
- Low Pressure
- Flexible Hose
- Flow Straightener
- Flow Aerator
- Single Flow

Certifications

WRAS APPROVED PRODUCT	5.2 l/min
1804346 - April 23	*Tested at 0.2 bar*

COMAP UK Ltd. Unit C6, William Way, Moss Ind Est, St Helens Rd, Leigh. Lancashire. WN7 3PT
www.comaptaps.co.uk

aalberts

4J4011-PDS-V1

Bathroom Tap Specificaiton

TAPWARE

ETHOS

Ethos Mini Mono Basin Mixer

Product Code: ETH313

Finish: Chrome

Deva by METHVEN

Features

Construction:	Brass
Valve/Cartridge type:	Ceramic Cartridge
Supply:	Suitable for all plumbing systems
Working Pressures:	0.3 - 5.0 bar
Inlet connections:	½" BSP
Flexi or Copper:	Flexi Tails

- Ceramic Cartridge for smooth operation
- Tilt and turn temperature and flow control
- In full colour packaging

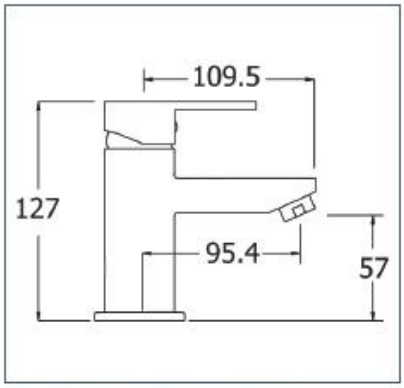



*Please refer to website for full warranty details.

Flow (Bar - l/min, open outlet)

Spout

Flow 0.1	Flow 0.3	Flow 0.5	Flow 1.0	Flow 2.0	Flow 3.0	Flow 4.0	Flow 5.0
2.8	4.7	5.9	8.1	11.3	14.1	16.1	18

kiwa 1912722

WRAS 1912307

12 YEAR GUARANTEE ON ALL DEVA CHROME TAPS *TERMS APPLY

www.deva-uk.com · 0800 195 1602 · sales@uk.methven.com

THE INFORMATION ON THIS SPECIFICATION DOCUMENT WAS CORRECT AT THE DATE OF ISSUE. SOME VARIATION MAY OCCUR DUE TO THE MANUFACTURING TOLERANCES AND SITE SPECIFIC CONDITIONS.

Rainwater Harvesting System Service Quote

JRH water management

Home Close
East Firsby
Market Rasen
Lincolnshire
LN8 2DB

Date:13/01/2021

To

Christ's Hospital
The Counting House
Christs Hospital
Horsham
West Sussex
RH13 0TL
Site - Westons Barn Farm
RH13 0BD
Francis Pulvermacher
[redacted]

Salesperson	Job	Payment Terms	Due Date
MICHAEL JORDEN	Rainwater Harvesting System – Estimate	[redacted]	

Qty	Description	Unit Price	Line Total
Overview	To supply and install RWH system to sites – based on information provided - • RWH system to be installed to barn – taking total roof area • Splitting roof into two system – 1 x side for one system, valley and other side second system • Overflows – to 1 x drain back right corner – assuming 6" drain? • Tanks sited as per picture at bottom of estimate • Due to front valley outlet not being able to be taken across due to doors based on this outlet being blocked to make water run to back outlet • All based on pipework for both systems being installed to timber boarding on siding of shed		
RWH SYSTEM	Valley and side system Roof – 1012m2 roof size with average rainfall per year of 850mm with the filters working at 90% of water going to tanks gives – 774,180L per year going to store average per system 25mm of rainfall on the roof will collect to tanks – 22,700L • 3 x 22,000L NP tank with 2" outlets and fxf taps • 2 x tank link kits • 1 x Wall mounted filter set with mount brackets • 160mm & 110mm pipe, fittings & clips in black • 6x2 treated timber for filter frame supports • 1 x Mechanical tank water level gauge • Labour for x2 to install inc all screws, glues etc to complete works Side system Roof – 337m2 roof size with average rainfall per year of 850mm with the filters working at 90% of water going to tanks gives – 257,805L per year going to store average per system 25mm of rainfall on the roof will collect to tanks – 7582L	[redacted]	[redacted]

	• 1 x 22,000L NP tank with 2" outlets and fxf taps • 1 x Wall mounted filter set with mount brackets • 110mm pipe, fittings & clips in black • 6x2 treated timber for filter frame supports • 1 x Mechanical tank water level gauge • Labour for x2 to install inc all screws, glues etc to complete works		
PLEASE NOTE	• Recommended - Base of 4m x 12m for tanks x 3 and 4m x 4m for 1 x tank • Full access inside and outside of shed for duration of works • Tanks will need to be offloaded and put in location – telehandler needed with driver at all locations • Rubbish removal by customer		
		Subtotal	[redacted]
		VAT 20%	[redacted]
		Total	[redacted]

TERMS:
ALL PRICING IS VALID FOR 30 DAYS FROM DATE OF QUOTATION
JRH RESERVE THE RIGHT TO AMEND PRICES SHOULD SUBSEQUENT INFORMATION BE AT VARIANCE TO THE SPECIFICATION RECIEVED
PAYMENT TERMS AS PER ABOVE AND FINAL PAYMENT DUE WITHIN 48HRS OF JOB COMPLETION
JRH DO NOT GUARANTEE THE QUALITY OF THE EXISTING PIPE WORK AND CANNOT BE HELD RESPONSIBLE FOR ANY LEAKS CAUSED THROUGH DEFECTS IN THIS PIPE WORK
ALL MATERIALS REMAIN THE PROPERTY OF JRH WATER MANAGEMENT UNTIL FULL PAYMENT IS RECEIVED

