DWL 01	Bike Store Plans	1-50 1m 2m

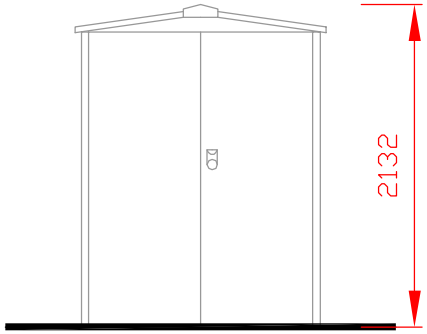

Front Elevation



Side Elevation(s)

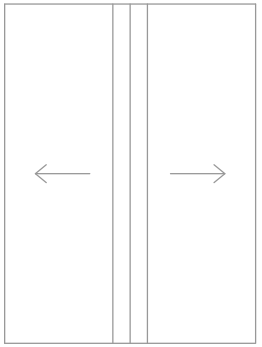

Roof Plan

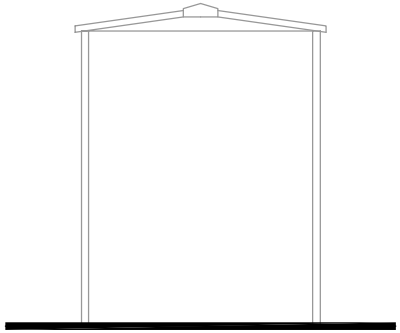

Rear Elevation

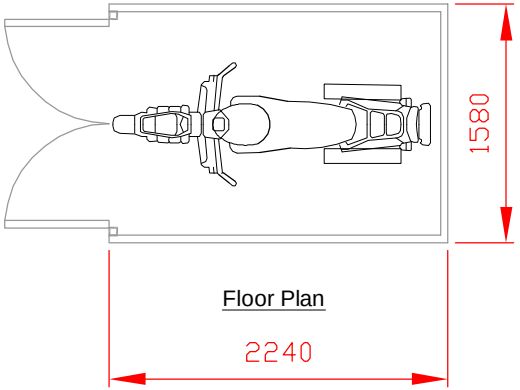

Floor Plan

Just Plans

07865 259 181
www.justplans.net

e: joseph@justplans.net
e: james.smith@justplans.net
e: info@justplans.net

Terms of Planning Service:

A- RELATING TO THE DRAWINGS:

1. All drawings, advice and services supplied by JustPlansLtd are subject to appeval under the Town and Country Planning Acts.

2. All drawings and information supplied are designed for exclusive use as part of a residential planning application.

3. No drawing or information supplied is designed for any purpose other than as part of a planning application, especially and including any building works or any building regulations application.

4. No drawing or information supplied should be used as an on-site reference.

5. No drawing supplied should be scaled from, except by a council officer or administrator for the purpose of either validating or granting permission for the planning application.

6. No drawing supplied should be used either as the basis of, or to corroborate, any drawings, observations or works of any kind by a third party. Especially they should not be used as the basis of or to corroborate any future building regulations application.

7. No drawing supplied should be used for a building contractor to quote from.

8. Any discrepancy between information contained within the drawings and the actuality on site must be immediately relayed to JustPlans upon discovery.

9. JustplansLtd's liability for any discrepancy between drawing information and site reality is limited to the duration of the planning process and expires once the council has made its decision.

10. In the event that a council awards planning approval but subsequently retracts approval on the basis that drawings or information supplied are inaccurate or incorrect, JustPlans does not accept liability for

(a) any direct or indirect resultant expense
(b) providing any additional planning application or amendment to correct the position.

11. Any dimensions contained within any drawing supplied are accurate only to a standard suitable for obtaining planning permission validation and registration. Especially, they should not be built from.

12. Drawings are approximate only and should not be relied upon for any structural work. Especially they should not be relied upon for any calculations relating to beam sizes.

B- RELATING TO THE TERMS OF SERVICE:

1. The dwg file (CAD file) remains the exclusive property of Just Plans Ltd.

2. Any changes or amendments required to the draft extension design must be clearly drawn and / or annotated on the draft drawings and returned to JustPlansLtd in either hard or soft copy format.

3. JustPlans commits itself to providing one opportunity for amendments to the draft design as described in paragraph 2 above. Unless otherwise agreed in writing, JustPlansLtd does not agree to provide additional opportunities to further amend the design.

4. In the event that more than one change to the draft design is nevertheless provided by us, beyond the terms of paragraph 3 above, be advised that such additional modifications greatly increase the likelihood of errors arising in our database and that of any other affected parties. Digital drawing files may become too large to email or work with and digital copies may become corrupt. In such circumstances, JustPlansLtd is not liable for any resultant problems, whether relating to our own digital files or those of other third parties including the local council.

5. Although our drawings are normally produced using CAD, we offer no guarantee that digital copies of drawings will be kept on file.

6. Any digital copies of drawings which JustPlansLtd agrees to supply are subject to these terms.

7. When a planning application is received by the local authority it is checked for suitability by the planning administration team. JustPlansLtd gives no guarantee that any application made on your behalf will receive immediate validation and indeed it is common for the validation process to take a considerable period of time.

8. JustPlansLtd offers no commitment to provide any service for taking part in or negotiating with any professional person or body for any part of the construction process, including any building contractor, structural engineer or council office.

9. No guarantee is provided that any drawing supplied will be granted planning approval or can be built without obtaining specific planning approval. Planning permission guidelines are general in nature, vary significantly between councils and are in a state of constant flux. Most councils award or deny planning approval based in part upon a subjective assessment of the merits of each individual property in relation to the immediate environment. Because of this broad discretionary power it is impossible to predict with certainty or even high accuracy whether a proposal will receive or be denied planning permission.

Just Plans is a trading name for Just Plans Limited, company number 10113907.

36 North Street
Storrington
West Sussex
RH20 4NZ

Scale 1-50

Paper Size: A4

Rev - - J O'Neill