

LIGHTING DESIGNER: AMY SMITH

CONTACT NUMBER: 01942 433514

PROJECT NUMBER:

PROJECT TITLE: VICENT HOUSE – EXTERNAL ONLY – REV I

Designed to Deliver

Ansell Lighting Design Department

Ansell Electrical Products Ltd
Unit 6B, Stonecross Industrial Park
Yew Tree Way
Warrington
WA3 3JD



Category	Streetlights
Application	Commercial, Education, Healthcare, Outdoor
Specification	Performance

Magna

Magna Street Light 1 Warm White
Code: AMAGLED/1/WW







PRODUCT FEATURES

- Modern die-cast aluminium street light suitable for residential and commercial applications
- UV stabilized polycarbonate cover
- Built in anti-tamper isolation facility
- Advanced lens technology providing optimum performance and control.
- Die-cast aluminium construction for optimal heat dissipation and performance
- Toolless gear tray removal for ease of maintenance
- Compatible with post top or side entry utility 76mm spigot
- G3 Glare Rating

GENERAL INFORMATION

Wattage	30W
Lumens Delivered	4700lm
Lm/W	150lm/W
Beam Angle	50/140
CRI	70
CCT	3000K
Input	220/240V
Operating Temp	-30°C - 50°C
SDCM	3
Product Weight without Packaging	5.694 kg

TECHNICAL INFORMATION

Light Source	LED
Colour / Finish	Black
IP Rating	IP66
Class Protection	1
Internal / External	External
Surface / Recessed / Suspended	Pole
Lumen Depreciation	L80 100,000h
Warranty (Years)	5
CE Mark	Yes
Height	295 mm
Accessories	AMAGLED/SBA



Category	Streetlights
Application	Commercial, Education, Healthcare, Outdoor
Specification	Performance

Magna

Magna Street Light 1 Warm White
Code: AMAGLED/1/WW

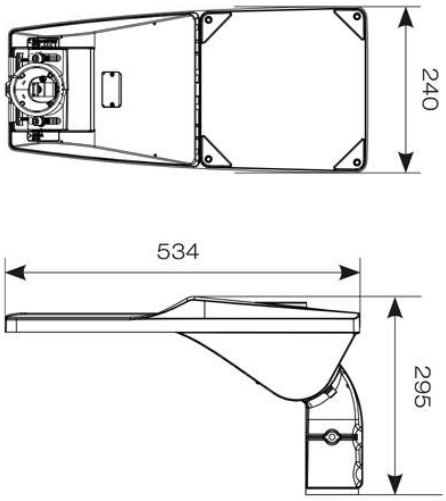

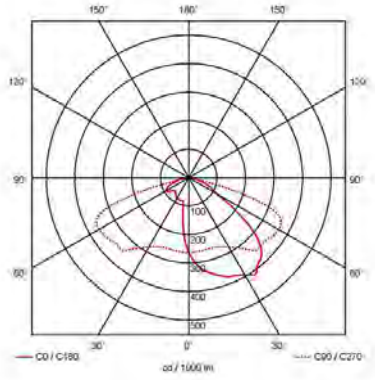



Category	Floodlights
Application	Ancillary, Commercial, Education, Healthcare, Hospitality, Industrial, Outdoor, Retail
Specification	Performance

Aztec Asymmetric

Aztec Asymmetrical Floodlight 150W

Code: AAZLED150/ASY



PRODUCT FEATURES

- High performance die-cast aluminium LED floodlight suitable for industrial applications
- Pre-installed breathable gland prevents internal moisture accumulation
- High efficiency up to 143 Lm/W
- Non-dimmable
- High output, high efficiency asymmetric lens technology for anti-light pollution
- Bracket design allows installation without removing mounting bracket
- Pre-wired with 1.5 metre of rubber insulated cable for ease of installation

GENERAL INFORMATION

Wattage	150W
Lumens Delivered	21100lm
Lm/W	141lm/W
Beam Angle	60/120
CRI	70
CCT	5000K
Input	220/240V
Operating Temp	-30°C - 50°C
SDCM	5
Product Weight without Packaging	3.993 kg

TECHNICAL INFORMATION

Light Source	LED
Colour / Finish	Black
IP Rating	IP66
Class Protection	1
Internal / External	External
Surface / Recessed / Suspended	Pole, Wall
Lumen Depreciation	L80 54,000h
Warranty (Years)	5
CE Mark	Yes
Height	360 mm



Category	Floodlights
Application	Ancillary, Commercial, Education, Healthcare, Hospitality, Industrial, Outdoor, Retail
Specification	Performance

Aztec Asymmetric

Aztec Asymmetrical Floodlight 150W

Code: AAZLED150/ASY

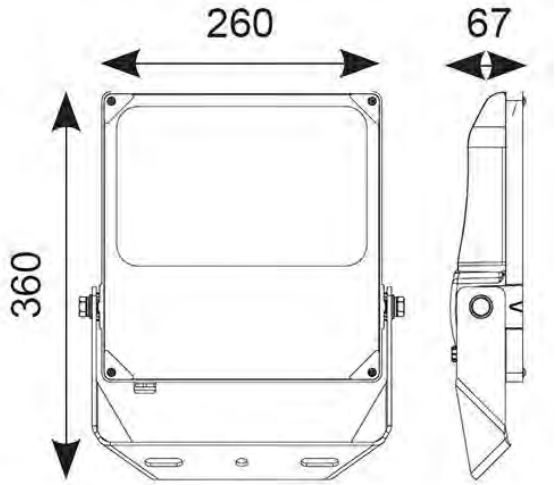

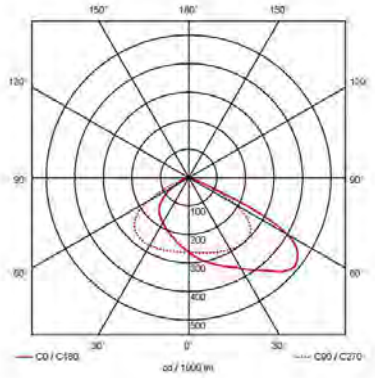



Category	Bulkheads
Application	Ancillary, Commercial, Education, Healthcare, Hospitality, Industrial, Outdoor, Retail
Specification	Performance

Lucca

Lucca CCT Multi Wattage
Code: ALUCLED/B

PRODUCT FEATURES

- IP66 rated die-cast aluminium wall light with opal polycarbonate diffuser suitable for education, commercial and industrial applications
- One product with integral switches for multi-wattage and selectable CCT options
- Powered by Tridonic
- Tamper-proof stainless steel allen key screws
- Non-dimmable

GENERAL INFORMATION

Wattage	18W - 27W
Lumens Delivered	1300lm - 1900lm (4000K)
Lm/W	69lm/W - 71lm/W (4000K)
Beam Angle	105/110
CRI	80
CCT	3000/4000K
Input	220/240V
Operating Temp	-20°C - 40°C
SDCM	5
Product Weight without Packaging	1.869 kg

TECHNICAL INFORMATION

Light Source	LED
Colour / Finish	Black
IP Rating	IP66
Class Protection	1
Internal / External	External
Surface / Recessed / Suspended	Wall
Lumen Depreciation	L70 60,000h
Warranty (Years)	5
CE Mark	Yes
Diameter	298 mm



Category	Bulkheads
Application	Ancillary, Commercial, Education, Healthcare, Hospitality, Industrial, Outdoor, Retail
Specification	Performance

Lucca

Lucca CCT Multi Wattage

Code: ALUCLED/B

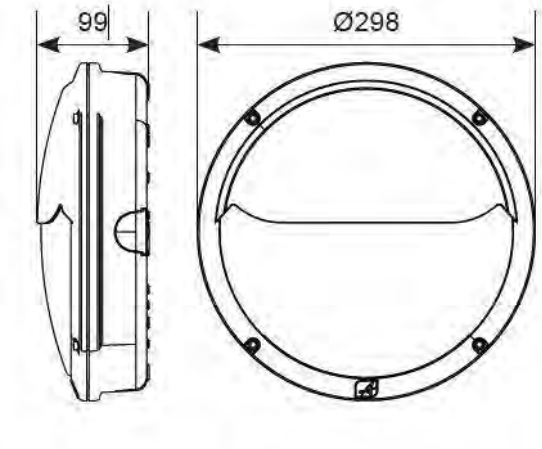

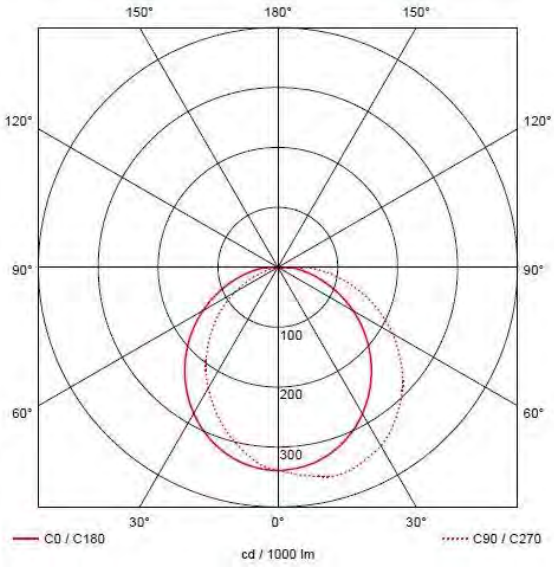



Category	Feature Lighting
Application	Commercial, Education, Healthcare, Hospitality, Outdoor, Residential, Retail
Specification	Architectural

Turlock

Turlock 70 LED Walkover IP67
Code: ATURWOLED/70

PRODUCT FEATURES

- Powerful compact LED inground uplight suitable for commercial, hospitality and residential applications
- Static load test to 2000kg
- Pre-wired with 1 metre of rubber insulated cable
- Powered by HEP
- Die-cast aluminium construction with 316L stainless steel top frame
- Supplied c/w installation housing for additional protection and ease of installation
- Non-dimmable

GENERAL INFORMATION

Wattage	3
Lumens Delivered	130lm
Lm/W	45lm/W
Beam Angle	20
CRI	90
CCT	4000K
Input	220/240V
Operating Temp	-20°C - 25°C
SDCM	3
Energy efficiency class	F
Product Weight without Packaging	0.485 kg

TECHNICAL INFORMATION

Light Source	LED
Colour / Finish	Stainless Steel
IP Rating	IP67
Class Protection	1
Internal / External	External
Surface / Recessed / Suspended	Recessed
Warranty (Years)	5
CE Mark	Yes
Diameter	68 mm



Category	Feature Lighting
Application	Commercial, Education, Healthcare, Hospitality, Outdoor, Residential, Retail
Specification	Architectural

Turlock

Turlock 70 LED Walkover IP67

Code: ATURWOLED/70

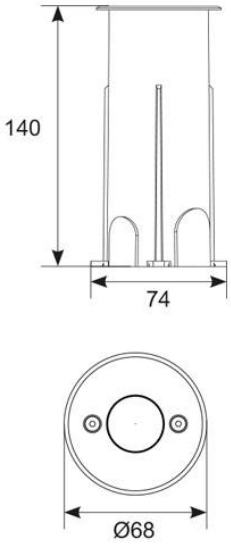

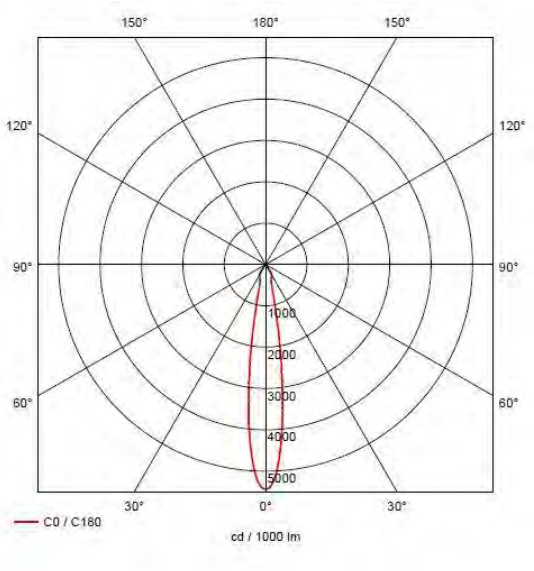

ACCESSORIES	
ATURWOLED/70/2	Turlock 70 2-Way Mini Drive Over Cover
ATURWOLED/70/4	Turlock 70 4-Way Mini Drive Over Cover



Category	Feature Lighting
Application	Commercial, Education, Healthcare, Hospitality, Residential, Retail
Specification	Architectural

Turlock

Turlock 70 4-Way Mini Drive Over Cover
Code: ATURWOLED/70/4

PRODUCT FEATURES

- Mini drive over cover accessory
- Compatible with Turlock LED Inground Uplight

GENERAL INFORMATION

Product Weight without Packaging	0.109

TECHNICAL INFORMATION

Light Source	LED
Colour / Finish	Stainless Steel
Surface / Recessed / Suspended	Recessed
CE Mark	Yes



Category	Feature Lighting
Application	Commercial, Education, Healthcare, Hospitality, Residential, Retail
Specification	Architectural

Turlock

Turlock 70 4-Way Mini Drive Over Cover
Code: ATURWOLED/70/4

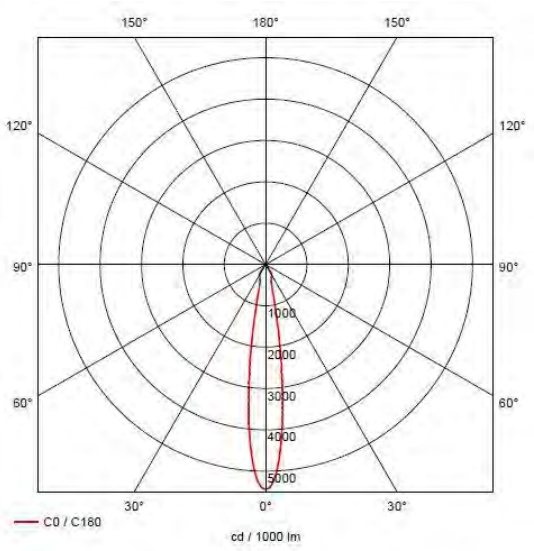



Category	Bulkheads
Application	Ancillary, Commercial, Education, Healthcare, Hospitality, Industrial, Outdoor, Retail
Specification	Performance

Lucca

Lucca CCT Multi Wattage Emergency Black
Code: ALUCLED/B/M3

PRODUCT FEATURES

- IP66 rated die-cast aluminium wall light with opal polycarbonate diffuser suitable for education, commercial and industrial applications
- One product with integral switches for multi-wattage and selectable CCT options
- Powered by Tridonic
- Tamper-proof stainless steel allen key screws
- Non-dimmable

GENERAL INFORMATION

Wattage	18W - 27W
Lumens Delivered	1300lm - 1900lm (4000K)
Lm/W	69lm/W - 71lm/W (4000K)
Beam Angle	105/110
CRI	80
CCT	3000/4000K
Input	220/240V
Operating Temp	0°C - 40°C
SDCM	5
Product Weight without Packaging	2.308 kg

TECHNICAL INFORMATION

Light Source	LED
Colour / Finish	Black
IP Rating	IP66
Class Protection	1
Internal / External	External
Surface / Recessed / Suspended	Wall
Lumen Depreciation	L70 60,000h
Warranty (Years)	5
CE Mark	Yes
Diameter	298 mm
Emergency Output Duration	3 Hr



Category	Bulkheads
Application	Ancillary, Commercial, Education, Healthcare, Hospitality, Industrial, Outdoor, Retail
Specification	Performance

Lucca

Lucca CCT Multi Wattage Emergency Black

Code: ALUCLED/B/M3

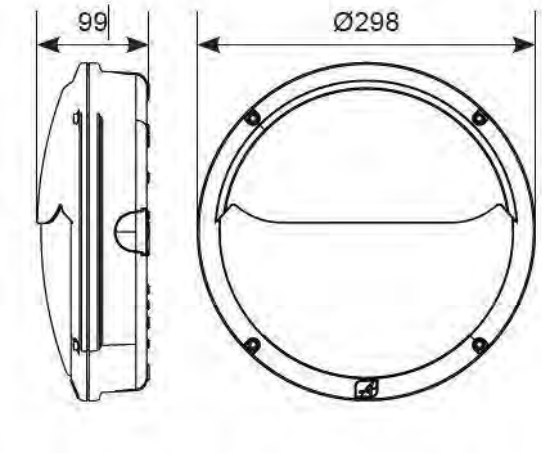

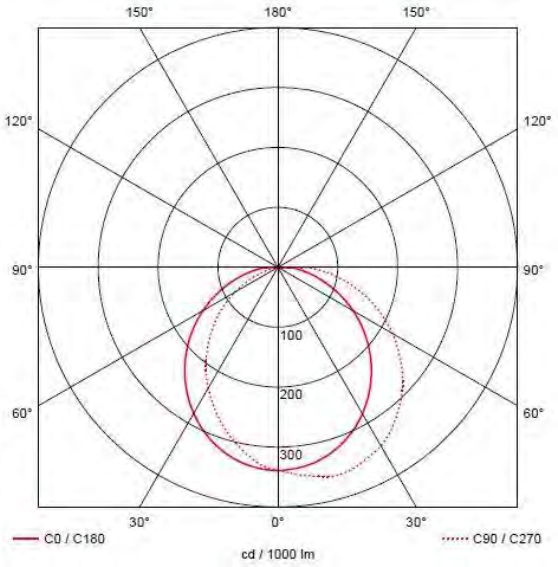



Category	Emergency
Application	Ancillary, Commercial, Education, Healthcare, Hospitality, Industrial, Retail
Specification	Performance

Owl High Output

Owl Twin Spot High Output IP66 Non-Maintained

Code: ATSLED/3NM/ST/HO

PRODUCT FEATURES

- Self-test Twin LED emergency floodlight for industrial applications
- Moulded polycarbonate heads
- Robust white moulded enclosure
- Self-test as standard

GENERAL INFORMATION	
Wattage	3W
Lumens Delivered	706lm (Emergency)
Beam Angle	60
CRI	70
CCT	6500K
Input	220/240V
Operating Temp	0°C - 40°C
Product Weight without Packaging	1.602 kg

TECHNICAL INFORMATION	
Light Source	LED
Colour / Finish	White
IP Rating	IP66
Class Protection	1
Internal / External	Internal / External
Surface / Recessed / Suspended	Wall
Lumen Depreciation	L70 50,000h
Warranty (Years)	5
CE Mark	Yes
Height	290 mm
Emergency Output Duration	3 Hr



Category	Emergency
Application	Ancillary, Commercial, Education, Healthcare, Hospitality, Industrial, Retail
Specification	Performance

Owl High Output

Owl Twin Spot High Output IP66 Non-Maintained
Code: ATSLED/3NM/ST/HO

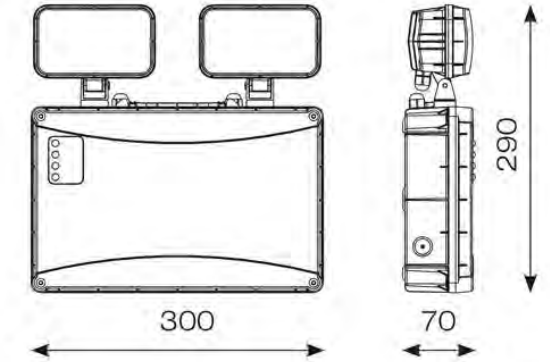

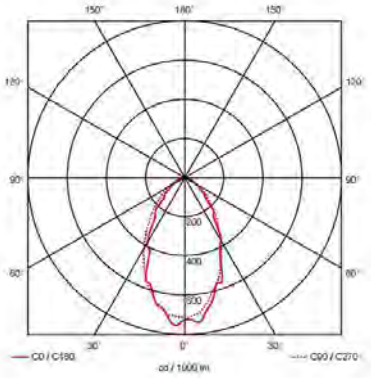

SPARES	
ASBP/6/LI	6.4V 5.5Ah-5 Li-FePO4 Replacement Battery

Vincent House, Horsham - External Only

Installation : Proposed New Lighting

Project number :
Customer :
Processed by : Amy Smith
Date : 08.10.2024 Rev I

Project description:
All room/exterior area dimensions to be checked on-site prior to ordering.

Calculation based on standard reflectance values as 70/50/20 and Maintenance Factor 0.8.

Lighting designed to CIBSE guidelines where applicable and/or client requirements, all stated lux values are for overall averages across the room reference plane.

It is the responsibility of the customer to ensure any scheme provided by Ansell meets all requirements of the end uses.

Please note - This design has been completed following the specification provided by the customer as much as possible. please ensure all information is checked before ordering.

External - Fittings for the car park are mounted on 6m high columns, the fittings for the MUGA pitch are mounted on 8m columns and the fittings mounted on the building are mounted at 3m

Rev A - The road entrance added with 2 addtional streetlights.

Rev B - updated plans and additional fittings added as per the new plans.

Rev C - Change the streetlights on the road area to be wall mounted bulkheads as per the customers request.

Rev D - Change some floodlights to uplights as per the customers request.

Rev E - Reduce the driveway lighting as per the customers request.

Rev H - Changed the Wolf fittings to the lucca fitting as per the customers request.

Rev I - Added in the escape route as per the plan provided by the customer.

The following values are based on precise calculations performed on calibrated lamps and luminaires, and their configurations, whereby gradual, unavoidable deviations can occur in practice. All guarantee claims are excluded for the specified data.

This exclusion of liability applies irrespective of the legal grounds for both damages and consequential damages suffered by users and third parties.

Object : Vincent House, Horsham - External Only
Installation : Proposed New Lighting
Project number :
Date : 08.10.2024 Rev I

1 Luminaire data

1.1 ANSELL, COMMERCIAL MODULAR - P... (!APAC1/60/1/WW ...)

1.1.1 Data sheet

Manufacturer: ANSELL

!APAC1/60/1/WW + ADDIM/30/MC Recessed luminaire COMMERCIAL MODULAR - Pace TPa UGR<19
APAC1/60/1/WW
COMMERCIAL
Pace LED TPa CCT Backlit Recessed Panel
LED 28W

Supplied c/w Remote Driver

• High performance maintenance free LED panel
• Suitable for installation in offices, educational buildings, retail and healthcare premises
• Slimline design allows for installation into shallow ceiling voids
• TPa as standard
• UGR<19 (unified glare rating) compliant luminaire assisting to eliminate glare for visual comfort
• Cool white, warm white and daylight options
• Self-Test Panel Pod and Sensor Pod compatible
• Powered by Philips
• LED lifespan L80 B10 54,000 hours
• Dimmable and OCTO options available

Options
/OCTO OCTO Smart Control
/DD Digital Dimming (DD1/DD3)*
*DD2/D available with alternative control gear

AERMLED/60/SMF Surface Mounting Frame (L600mm x W600mm x D75mm)
APACLED/SK 2 Metre Suspension Kit

Operating Temp -10°C to 45°C

• Suitable for internal use only
• 5 Year Product Warranty

Luminaire data

Absolute Photometry		
Luminaire efficacy	:	113.14 lm/W
Classification	:	A50 ↓100.0% ↑0.0%
CIE Flux Codes	:	63 88 97 100 100
UGR 4H 8H	:	17.8 / 17.3
Control gear	:	Electronic ballast
Power	:	28 W
Luminous flux	:	3168 lm
Dimensions	:	595 mm x 595 mm x 0.0 mm

Equipped with

Quantity	:	1
Designation	:	LED single 830
Colour	:	3000K
Socket	:	--
Colour reproduction	:	--

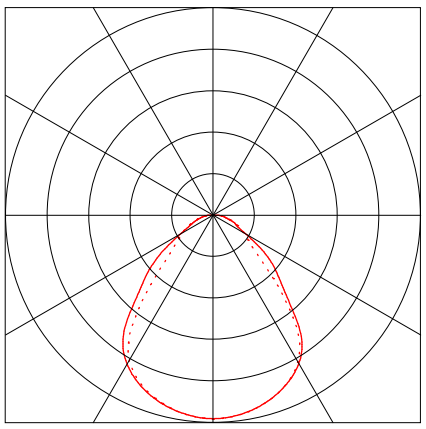



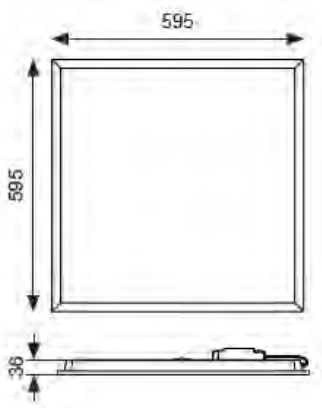

Object : Vincent House, Horsham - External Only
Installation : Proposed New Lighting
Project number :
Date : 08.10.2024 Rev I

1 Luminaire data

1.2 ANSELL, STREETLIGHTS - Magna Street... (AMAGLED/1/WW)

1.2.1 Data sheet

Manufacturer: ANSELL

AMAGLED/1/WW Post Top Lantern STREETLIGHTS - Magna Street Light
AMAGLED/1/WW
FLOODLIGHTING
Magna LED Street Light

Supplied c/w Integral Driver

- Die-cast aluminium construction for optimal heat dissipation and performance
- UV stabilized polycarbonate cover
- Toolless gear tray removal for ease of maintenance
- Built in anti-tamper isolation facility
- Compatible with post top or side entry utility 76mm spigot
- Advanced lens technology providing optimum performance and control.
- G3 Glare Rating
- Surge protection
- Available in standard, complete with photocell option
- LED lifespan L80 B10 54,000 hours

Operating Temp -30°C to 50°C

- 5 Year Product Warranty
- IP66

Luminaire data

Absolute Photometry		
Luminaire efficacy	:	150.26 lm/W
Classification	:	A30 ↓100.0% ↑0.0%
CIE Flux Codes	:	37 75 97 100 100
UGR 4H 8H	:	31.9 / 37.0
Control gear	:	Electronic ballast
Power	:	31 W
Luminous flux	:	4658 lm
Dimensions	:	534 mm x 240 mm x 95 mm

Equipped with

Quantity	:	1
Designation	:	LED
Colour	:	
Socket	:	--

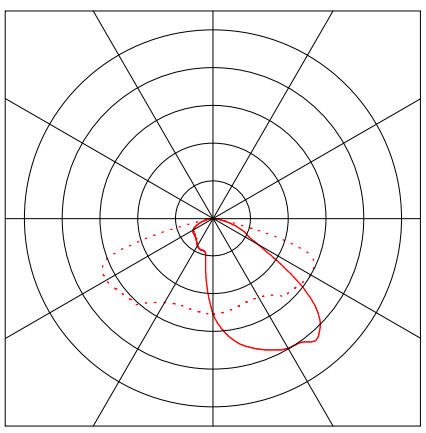



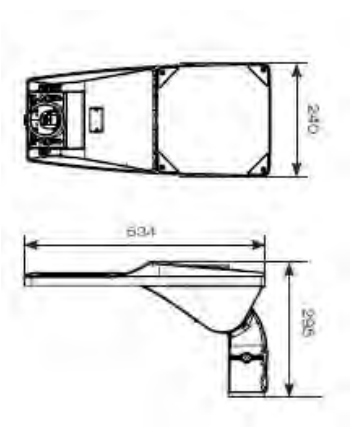

1 Luminaire data

1.3 ANSELL, FLOODLIGHTS - Aztec Asymme... (AAZLED150/ASY)

1.3.1 Data sheet

Manufacturer: ANSELL

AAZLED150/ASY Ceiling mounted luminaire FLOODLIGHTS - Aztec Asymmetric
AAZLED150/ASY
FLOODLIGHTING
Aztec LED Symmetrical Floodlight
LED 150W - Cool White

Supplied c/w Integral Driver

- High performance die-cast aluminium LED floodlight
- High output, high efficiency asymmetric lens technology for anti-light pollution
- Pre-installed breathable gland prevents condensation
- High specification IP66, IK08 ratings
- 60x120° beam angle
- 150W exceeds performance of 250W HQI-T
- Pre-wired with 1.5 metre of rubber insulated cable for ease of installation
- LED lifespan L80 B10 54,000 hours
- Non-dimmable

Option
/PIR

Operating Temp -30°C to 50°C

- Suitable for external use
- 5 Year Product Warranty
- IP66

Luminaire data

Absolute Photometry		
Luminaire efficacy	:	141.68 lm/W
Classification	:	A40 ↓100.0% ↑0.0%
CIE Flux Codes	:	44 87 99 100 100
UGR 4H 8H	:	37.3 / 32.8
Control gear	:	Electronic ballast
Power	:	149 W
Luminous flux	:	21111 lm
Dimensions	:	232 mm x 148 mm x 1 mm

Equipped with

Quantity	:	1
Designation	:	LED single 840
Colour	:	4000K
Socket	:	--
Colour reproduction	:	--

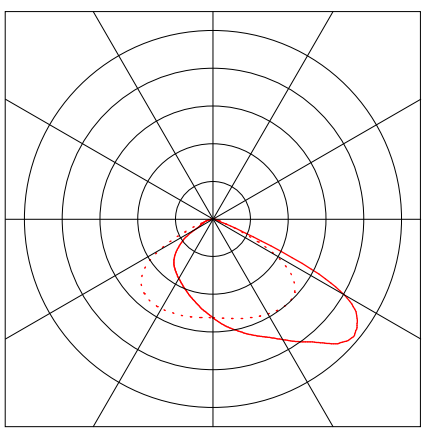



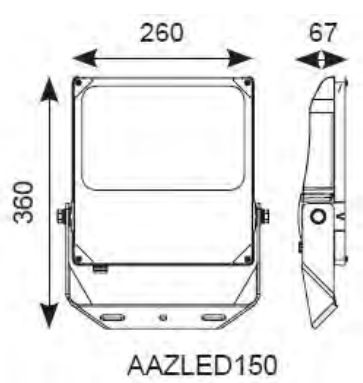

Object : Vincent House, Horsham - External Only
Installation : Proposed New Lighting
Project number :
Date : 08.10.2024 Rev I

1 Luminaire data

1.4 ANSELL, BULKHEADS - Lucca Black (ALUCLED/B - WW 18W)

1.4.1 Data sheet

Manufacturer: ANSELL

ALUCLED/B - WW 18W Ceiling mounted luminaire BULKHEADS - Lucca Black
ALUCLED/B
Amenity Architectural Die-Cast Wall
Lucca LED CCT
Supplied c/w Integral Driver

• Die-cast aluminium construction with tamperproof stainless steel allen key screws to retain opal polycarbonate diffuser and frame
• One product with integral switches for multi-wattage and selectable CCT options
• 18 W exceeds performance of 38 W TC-DD
• 27 W exceeds performance of 2x26W PL-C
• LED lifespan L70 60,000 hours
• Non-dimmable

• Suitable for external use only
• 5 Year Product Warranty
• IP65

Luminaire data

Absolute Photometry		
Luminaire efficacy	:	64.94 lm/W
Classification	:	A40 ↓100.0% ↑0.0%
CIE Flux Codes	:	45 76 93 100 100
UGR 4H 8H	:	20.7 / 15.3
Control gear	:	Electronic ballast
Power	:	18 W
Luminous flux	:	1169 lm
Dimensions	:	Ø325 mm x 125 mm

Equipped with

Quantity	:	1
Designation	:	LED
Colour	:	
Socket	:	--

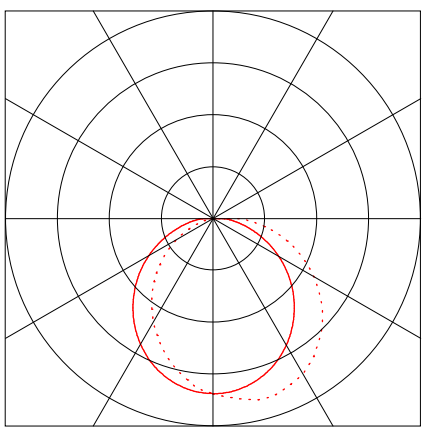



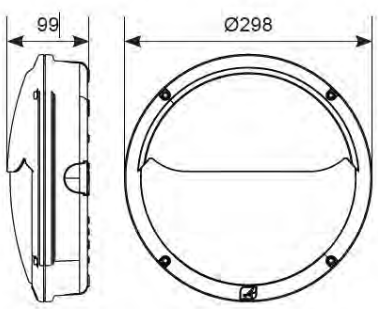

1 Luminaire data

1.5 ANSELL, FEATURE LIGHTING - Tur... (!ATURWOLED/70 +...)

1.5.1 Data sheet

Manufacturer: ANSELL

!ATURWOLED/70 + ATURWOLED/70/4 Recessed luminaire FEATURE LIGHTING - Turlock Inground Uplight
ATURWOLED/70
AMENITY
Turlock LED Inground Uplight
LED 3W

Supplied c/w Integral Driver

- Powerful compact LED inground uplight
- Exceeds performance of 50W Halogen
- Die-cast aluminium construction with 316L stainless steel top frame
- Static load test to 2000kg
- Supplied c/w installation housing for additional protection and ease of installation
- IK10 Rating
- Pre-wired with 1 metre of rubber insulated cable
- LED lifespan L70 50,000 hours
- Non-dimmable

Powered by HEP

- Suitable for external use only
- 5 Year Product Warranty
- IP67

Luminaire data		
Luminaire efficiency	:	68.3%
Luminaire efficacy	:	45.08 lm/W
Classification	:	A80 ↓100.0% ↑0.0%
CIE Flux Codes	:	99 100 100 100 68
UGR 4H 8H	:	<10.0 / <10.0
Control gear	:	Electronic ballast
Power	:	3 W
Luminous flux	:	135.2 lm

Equipped with		
Quantity	:	1
Designation	:	LED single 840
Colour	:	4000K
Luminous flux	:	198 lm
Socket	:	--
Colour reproduction	:	--

Dimensions : Ø25 mm x 0.0 mm

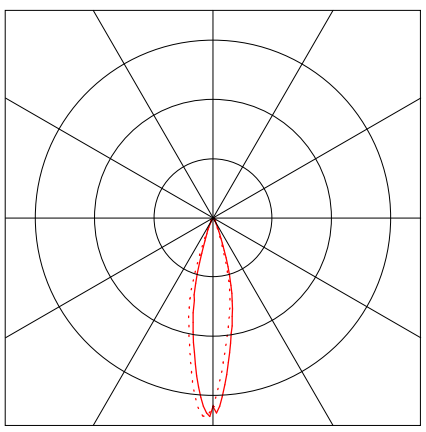



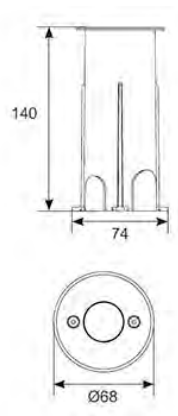

1 Luminaire data

1.6 ANSELL, BULKHEADS - Lucca Blac... (ALUCLED/B/M3 - ...)

1.6.1 Data sheet

Manufacturer: ANSELL

ALUCLED/B/M3 - WW 18W Ceiling mounted luminaire BULKHEADS - Lucca Black
ALUCLED/B/M3
Amenity Architectural Die-Cast Wall
Lucca LED CCT
Supplied c/w Integral Driver

• Die-cast aluminium construction with tamperproof stainless steel allen key screws to retain opal polycarbonate diffuser and frame
• One product with integral switches for multi-wattage and selectable CCT options
• 18 W exceeds performance of 38 W TC-DD
• 27 W exceeds performance of 2x26W PL-C
• LED lifespan L70 60,000 hours
• Non-dimmable

• Suitable for external use only
• 5 Year Product Warranty
• IP65

Luminaire data

Absolute Photometry
Luminaire efficacy : 64.94 lm/W
Classification : A40 ↓100.0% ↑0.0%
CIE Flux Codes : 45 76 93 100 100
UGR 4H 8H : 20.7 / 15.3
Control gear : Electronic ballast
Power : 18 W
Luminous flux : 1169 lm

Dimensions : Ø325 mm x 125 mm

Equipped with

Quantity : 1
Designation : LED
Colour :
Socket : --

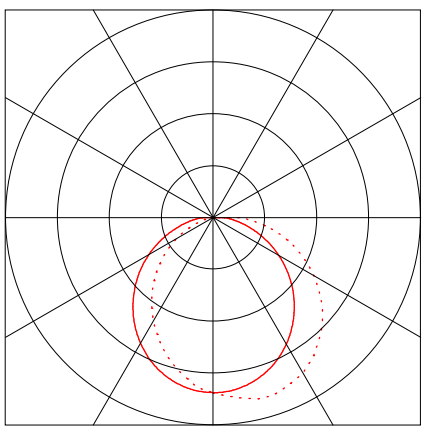



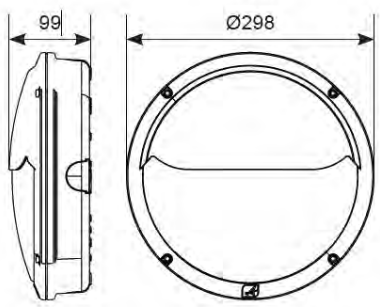

Emergency Lighting
Emergency lighting with own light source
Absolute Photometry
Luminaire efficacy : 11.77 lm/W
Power : 18 W
Luminous flux : 211.9 lm

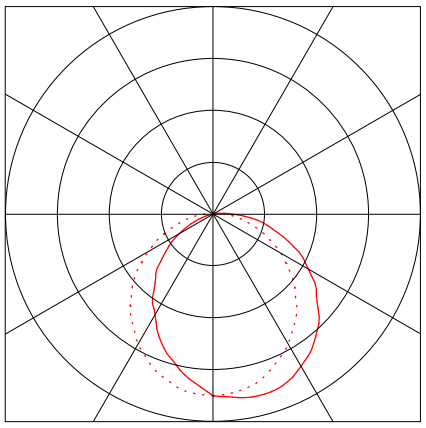

1 Luminaire data

1.7 ANSELL, EMERGENCY - Owl Twin Sp... (ATSLED/3NM/ST/HO)

1.7.1 Data sheet

Manufacturer: ANSELL

ATSLED/3NM/ST/HO Ceiling mounted luminaire EMERGENCY - Owl Twin Spot High Output
ATSLED/3NM/IP65/ST/HO
EMERGENCY
IP65 Owl LED Twin Spot High Output
LED 5W Non-Maintained - Emergency

Supplied c/w Integral Driver

- Self-test Twin LED emergency floodlight for industrial applications
- Robust white moulded enclosure
- Exceeds performance of 2x20W halogen equivalent
- Moulded polycarbonate heads

Operating Temp 5C° to 40C°

- Suitable for both internal and external use
- 5 Year Product Warranty
- IP66

Luminaire arrangement for:
ATSLED/3NM/ST/HO

	Position			Rotation		
	x[m]	y[m]	z[m]	Z[°]	C0[°]	C90[°]
(ATSLED/3NM/ST_H 3Wx353lm) :	-0.026	-0.100	0.108	30	0	60
(ATSLED/3NM/ST_H 3Wx353lm) :	-0.026	0.100	0.108	330	0	60

Position is the LDC position of the luminaire.



ATSLED/3NM/ST_H

Luminaire data

Absolute Photometry		
Luminaire efficacy	:	117.67 lm/W
Classification	:	A50 ↓100.0% ↑0.0%
CIE Flux Codes	:	67 89 97 100 100
UGR 4H 8H	:	15.2 / 18.1
Control gear	:	Electronic ballast
Power	:	3 W
Luminous flux	:	353 lm
Dimensions	:	130 mm x 100 mm x 70 mm

Equipped with

Quantity	:	1
Designation	:	LED
Colour	:	

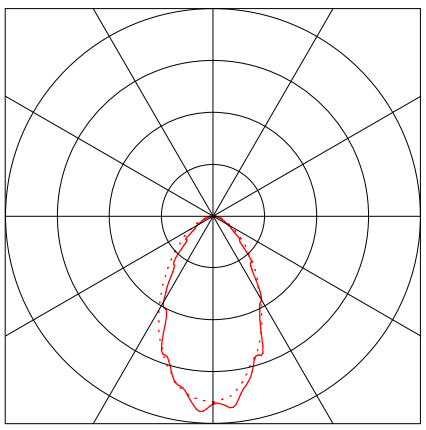

Object : Vincent House, Horsham - External Only
Installation : Proposed New Lighting
Project number :
Date : 08.10.2024 Rev I

1 Luminaire data

1.7 ANSELL, EMERGENCY - Owl Twin Sp... (ATSLED/3NM/ST/HO)

1.7.1 Data sheet

Emergency Lighting
Emergency lighting with own light source
Absolute Photometry

Luminaire efficacy	:	117.67 lm/W
Power	:	3 W
Luminous flux	:	353 lm

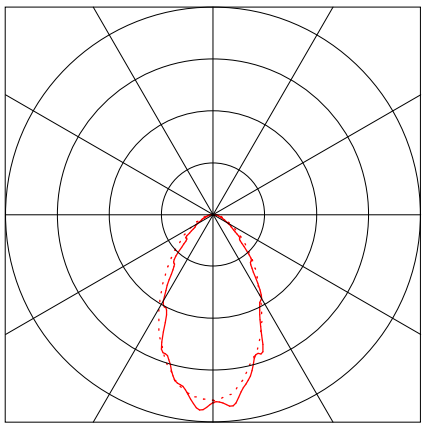

Object : Vincent House, Horsham - External Only
Installation : Proposed New Lighting
Project number :
Date : 08.10.2024 Rev I

Summary, Vincent House, Horsham - External

.1 Floor overview



Number of rooms 1
Total area 5794 m²
Number of luminaires 69
Total luminous flux 70106 lm
Total power 916 W
Total power per area 0.16 W/m²

Calculated

Parts list

Type No.\Make

ANSELL

2 4 x Order No. : AMAGLED/1/WW
Luminaire name : STREETLIGHTS - Magna Street Light
Equipment : 1 x LED 31 W / 4658 lm

3 6 x Order No. : AAZLED150/ASY
Luminaire name : FLOODLIGHTS - Aztec Asymmetric
Equipment : 1 x LED single 840 149 W / 21111 lm

4 10 x Order No. : ALUCLED/B - WW 18W
Luminaire name : BULKHEADS - Lucca Black
Equipment : 1 x LED 18 W / 1169 lm

5 12 x Order No. : !ATURWOLED/70 + ATURWOLED/70/4
Luminaire name : FEATURE LIGHTING - Turlock Inground Uplight
Equipment : 1 x LED single 840 3 W / 198 lm

6 32E x Order No. : ALUCLED/B/M3 - WW 18W -- Emergency Lighting --
Luminaire name : BULKHEADS - Lucca Black
Equipment : 1 x LED 18 W / 1169 lm
Emergency : 211.9 lm (18.1 %)

7 5E x Order No. : ATSLED/3NM/ST/HO -- Emergency Lighting --
Luminaire name : EMERGENCY - Owl Twin Spot High Output
with : 2 x ATSLED/3NM/ST_H
Equipment : 1 x LED 3 W / 353 lm (0%)
Emergency : 353 lm

Object : Vincent House, Horsham - External Only
Installation : Proposed New Lighting
Project number :
Date : 08.10.2024 Rev I

Summary, Vincent House, Horsham - External

.1 Floor overview

Rooms

Exterior	69 x Luminaires
Total luminous flux	70106 lm
Total power	916 W
Total power per area (5794 m²)	0.16 W/m²
$\bar{E}_m$	7 lx
E_{min}	0.3 lx
$E_{min}/\bar{E}_m$ (U_o)	0.04
R_{UG}	---



Object : Vincent House, Horsham - External Only
Installation : Proposed New Lighting
Project number :
Date : 08.10.2024 Rev I

1 Exterior

1.1 Description, Exterior

1.1.1 Floor plan



Object : Vincent House, Horsham - External Only
Installation : Proposed New Lighting
Project number :
Date : 08.10.2024 Rev I

1 Exterior

1.2 Summary, Exterior

1.2.1 Result overview, Car Park



General

Calculation algorithm used	Average indirect fraction
Maintenance factor	0.80
Total luminous flux	10485.00 lm
Total power	80.0 W
Total power per area (732.73 m²)	0.11 W/m² (1.53 W/m²/100lx)

Car Park	**Reference plane 1.1**
	Horizontal
$\bar{E}_m$	7.14 lx
E_{min}	0.27 lx
$E_{min}/\bar{E}_m$ (U_o)	0.04
E_{min}/E_{max} (U_d)	0.01
Position	0.00 m

Type No.\Make

		ANSELL	
2	2 x	Order No.	: AMAGLED/1/WW
		Luminaire name	: STREETLIGHTS - Magna Street Light
		Equipment	: 1 x LED 31 W / 4658 lm
4	1 x	Order No.	: ALUCLED/B - WW 18W
		Luminaire name	: BULKHEADS - Lucca Black
		Equipment	: 1 x LED 18 W / 1169 lm

1.2 Summary, Exterior

1.2.2 Result overview, Muga Pitch



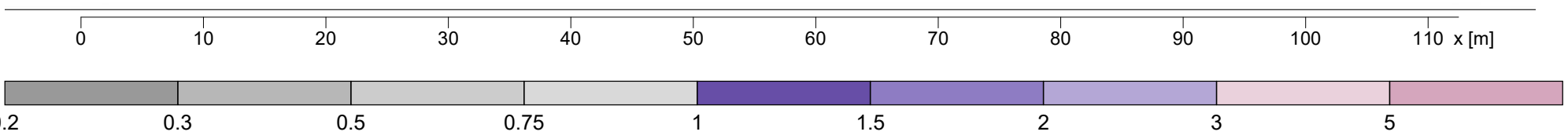

General

Calculation algorithm used	Average indirect fraction
Maintenance factor	0.80

Muga Pitch	**Reference plane 2.1**
	Horizontal
$\bar{E}_m$	1.08 lx
E_{min}	0.25 lx
$E_{min}/\bar{E}_m$ (U_o)	0.23
E_{min}/E_{max} (U_d)	0.03
Position	0.00 m

Type No.\Make

1.2 Summary, Exterior

1.2.3 Result overview, Walkway

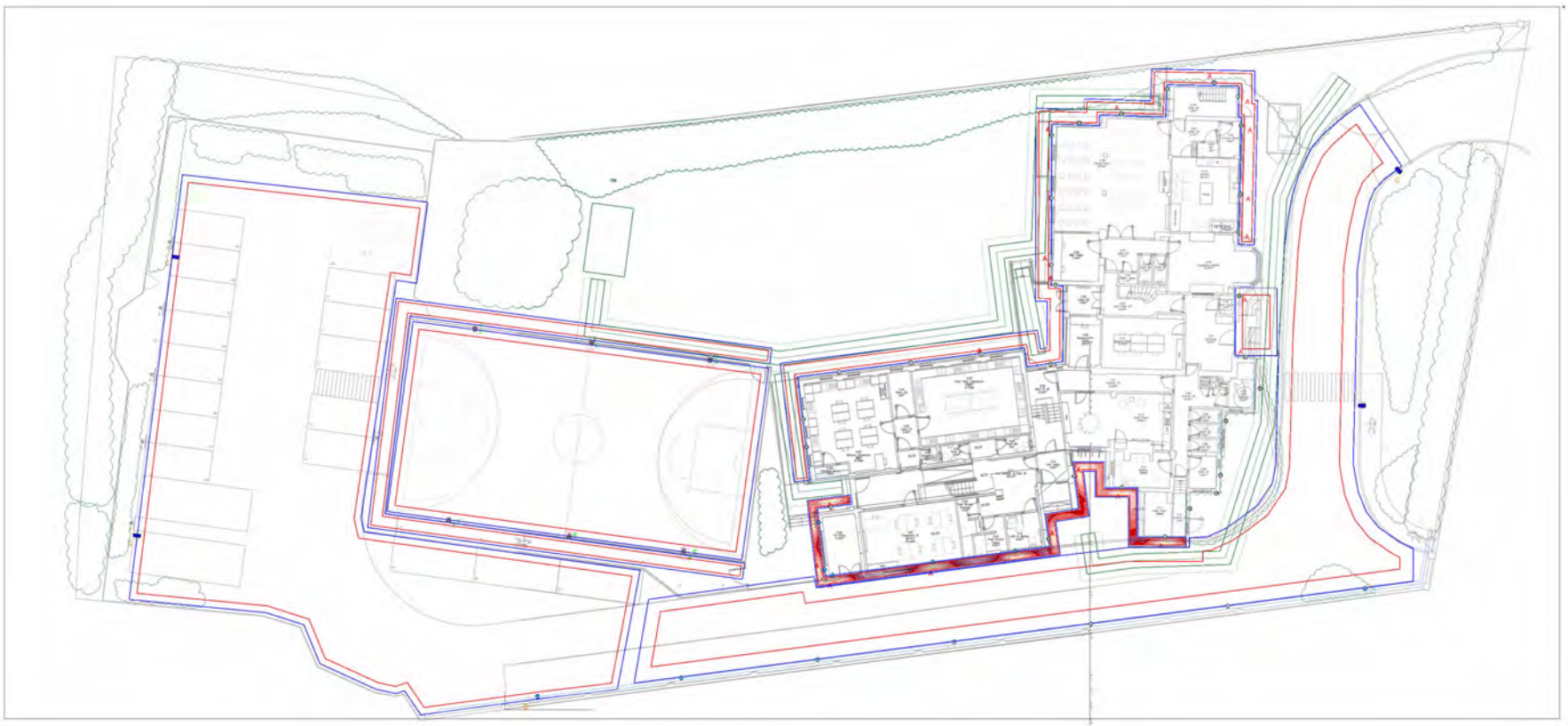

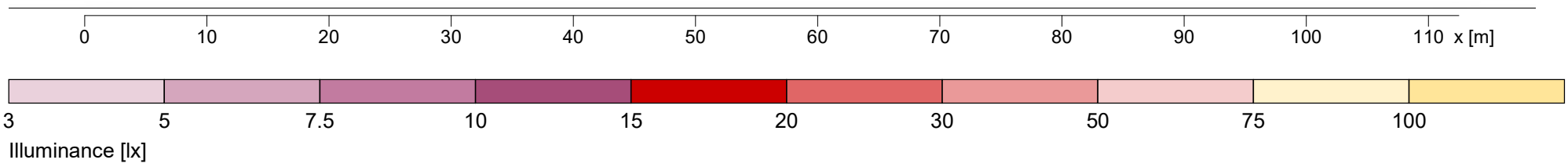

General

Calculation algorithm used	Average indirect fraction
Maintenance factor	0.80
Total luminous flux	11690.00 lm
Total power	180.0 W
Total power per area (31.02 m²)	5.80 W/m² (14.41 W/m²/100lx)

Walkway	**Walkway**
	Horizontal
$\bar{E}_m$	40.3 lx
E_{min}	4.5 lx
$E_{min}/\bar{E}_m$ (U_o)	0.11
E_{min}/E_{max} (U_d)	0.04
Position	0.00 m

Type No.\Make

	ANSELL		
4 5 x	Order No.	: ALUCLED/B - WW 18W	
	Luminaire name	: BULKHEADS - Lucca Black	
	Equipment	: 1 x LED 18 W / 1169 lm	
6 5E x	Order No.	: ALUCLED/B/M3 - WW 18W	-- Emergency Lighting --
	Luminaire name	: BULKHEADS - Lucca Black	
	Equipment	: 1 x LED 18 W / 1169 lm	
	Emergency	: 211.9 lm (18.1 %)	

1.2 Summary, Exterior

1.2.4 Result overview, Walkway



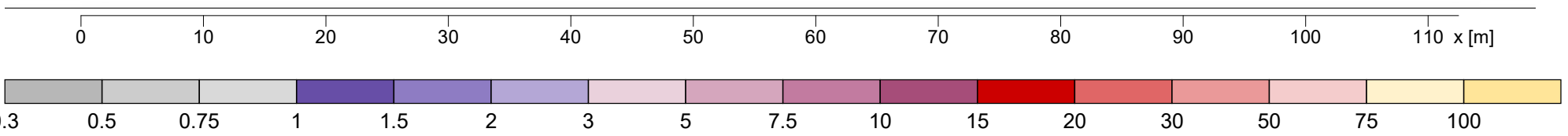

General

Calculation algorithm used	Average indirect fraction
Maintenance factor	0.80
Total luminous flux	21042.00 lm
Total power	324.0 W
Total power per area (86.47 m²)	3.75 W/m² (8.32 W/m²/100lx)

Walkway	**Walkway**
	Horizontal
$\bar{E}_m$	45.1 lx
E_{min}	0.4 lx
$E_{min}/\bar{E}_m$ (U_o)	0.01
E_{min}/E_{max} (U_d)	0.00
Position	0.00 m

Type No.\Make

		ANSELL		
6	18E x	Order No.	: ALUCLED/B/M3 - WW 18W	-- Emergency Lighting --
		Luminaire name	: BULKHEADS - Lucca Black	
		Equipment	: 1 x LED 18 W / 1169 lm	
		Emergency	: 211.9 lm (18.1 %)	

1.2 Summary, Exterior

1.2.5 Result overview, Entrance

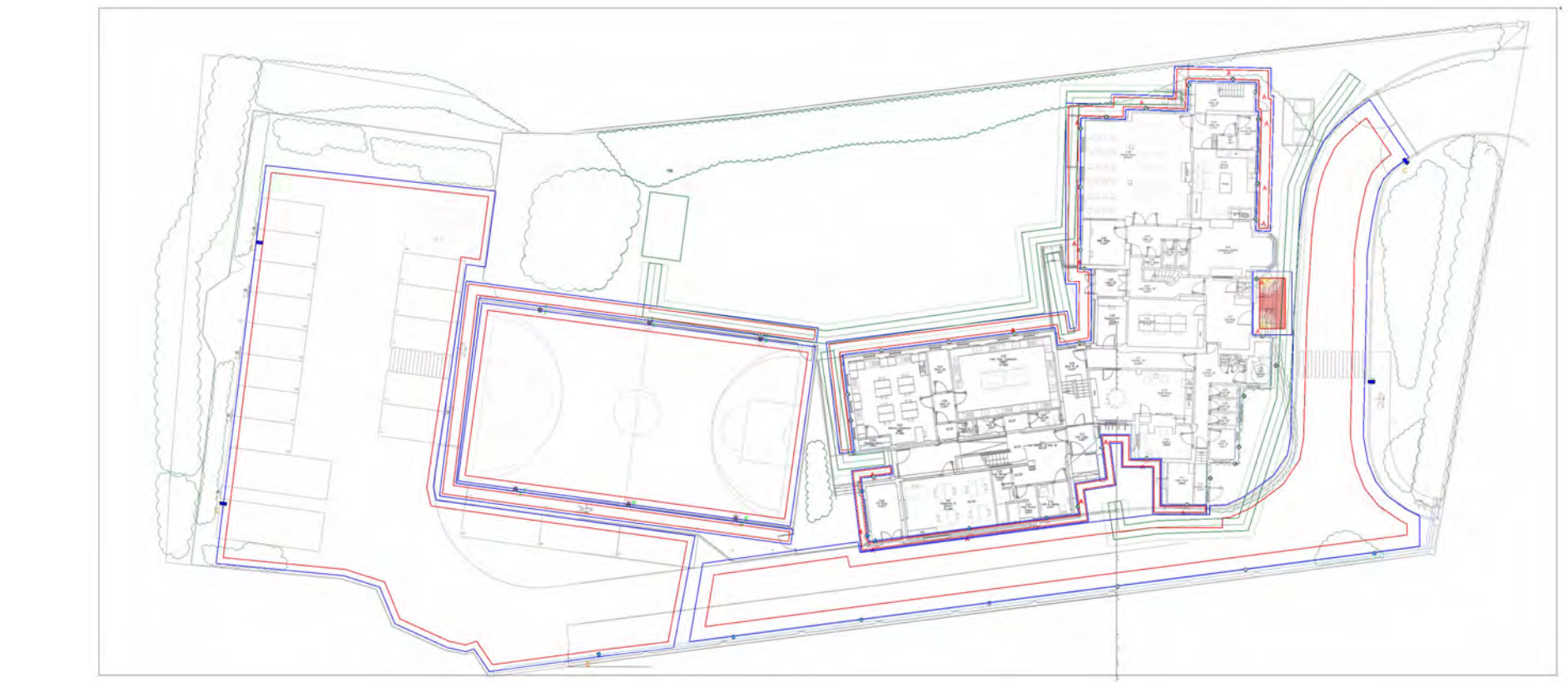

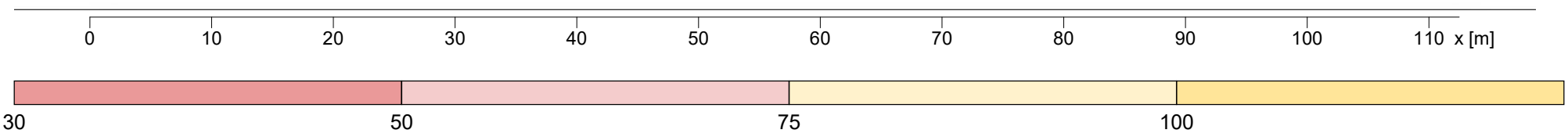

General

Calculation algorithm used	Average indirect fraction
Maintenance factor	0.80
Total luminous flux	2338.00 lm
Total power	36.0 W
Total power per area (14.70 m²)	2.45 W/m² (4.56 W/m²/100lx)

Entrance	**Entrance**
	Horizontal
$\bar{E}_m$	53.7 lx
E_{min}	31.9 lx
$E_{min}/\bar{E}_m$ (U_o)	0.59
E_{min}/E_{max} (U_d)	0.30
Position	0.00 m

Type No.\Make

		ANSELL		
6	2E x	Order No.	: ALUCLED/B/M3 - WW 18W	-- Emergency Lighting --
		Luminaire name	: BULKHEADS - Lucca Black	
		Equipment	: 1 x LED 18 W / 1169 lm	
		Emergency	: 211.9 lm (18.1 %)	

1.2 Summary, Exterior

1.2.6 Result overview, Roadway



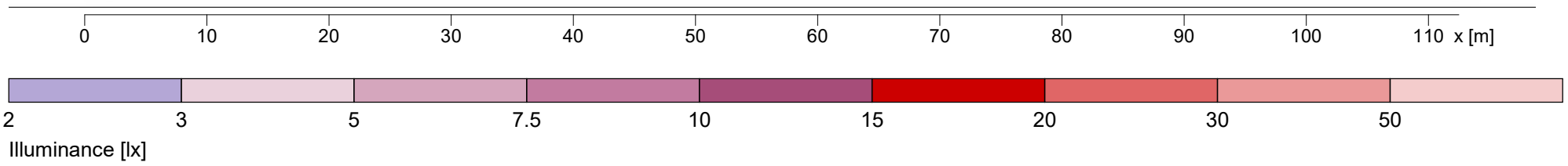

General

Calculation algorithm used	Average indirect fraction
Maintenance factor	0.80
Total luminous flux	11672.00 lm
Total power	139.0 W
Total power per area (463.07 m²)	0.30 W/m² (1.66 W/m²/100lx)

Roadway	**Roadway** Horizontal
$\bar{E}_m$	18.1 lx
E_{min}	3 lx
$E_{min}/\bar{E}_m$ (U_o)	0.17
E_{min}/E_{max} (U_d)	0.05
Position	0.00 m

Type No.\Make

ANSELL

2 1 x
Order No. : AMAGLED/1/WW
Luminaire name : STREETLIGHTS - Magna Street Light
Equipment : 1 x LED 31 W / 4658 lm

4 4 x
Order No. : ALUCLED/B - WW 18W
Luminaire name : BULKHEADS - Lucca Black
Equipment : 1 x LED 18 W / 1169 lm

6 2E x
Order No. : ALUCLED/B/M3 - WW 18W -- Emergency Lighting --
Luminaire name : BULKHEADS - Lucca Black
Equipment : 1 x LED 18 W / 1169 lm
Emergency : 211.9 lm (18.1 %)

1.2 Summary, Exterior

1.2.7 Result overview, MUGA Walkway

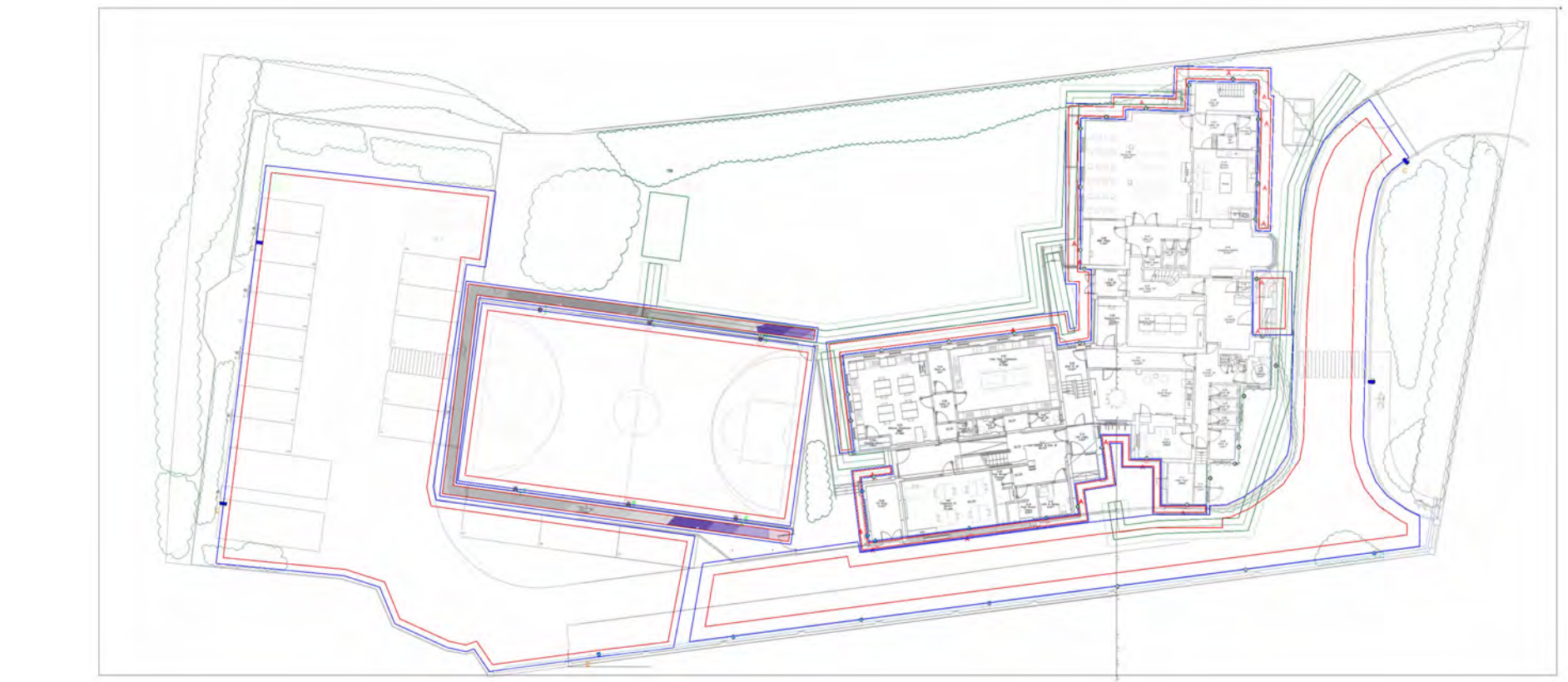

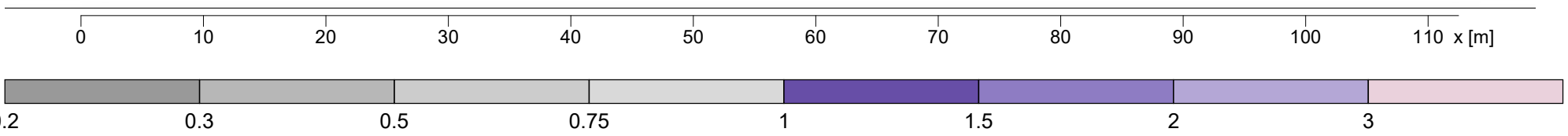

General

Calculation algorithm used	Average indirect fraction
Maintenance factor	0.80
Total luminous flux	1980.00 lm
Total power	30.0 W
Total power per area (79.71 m²)	0.38 W/m² (51.09 W/m²/100lx)

MUGA Walkway	**MUGA Walkway** Horizontal
$\bar{E}_m$	0.74 lx
E_{min}	0.23 lx
$E_{min}/\bar{E}_m$ (U_o)	0.31
E_{min}/E_{max} (U_d)	0.06
Position	0.00 m

Type No.\Make

		ANSELL	
5	10 x	Order No.	: !ATURWOLED/70 + ATURWOLED/70/4
		Luminaire name	: FEATURE LIGHTING - Turlock Inground Uplight
		Equipment	: 1 x LED single 840 3 W / 198 lm

Object : Vincent House, Horsham - External Only
Installation : Proposed New Lighting
Project number :
Date : 08.10.2024 Rev I

1 Exterior

1.3 Calculation results, Exterior

1.3.1 3D luminance, View 1

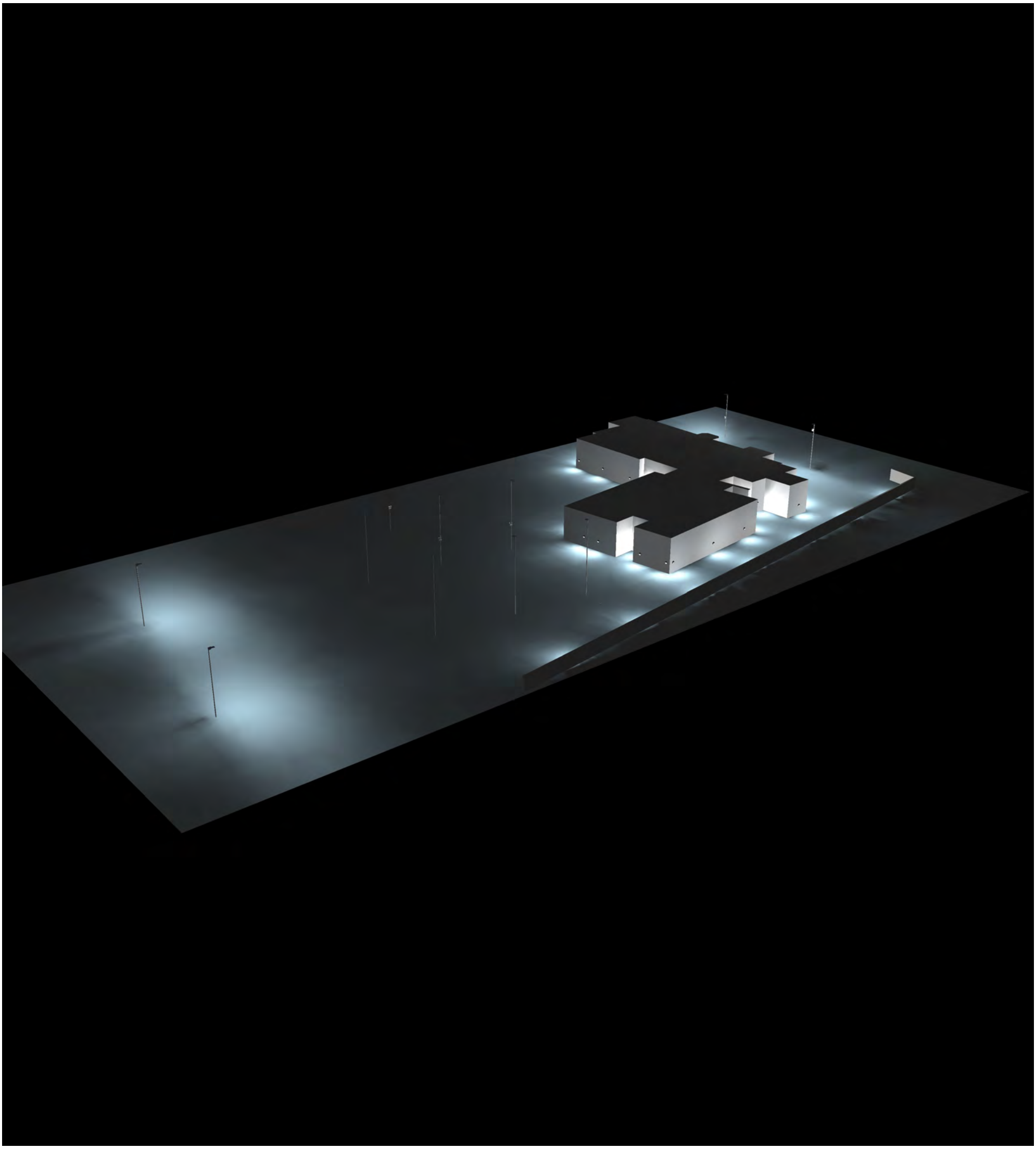

Luminance in the scene
Minimum: : 0 cd/m²
Maximum: : 101 cd/m²

1.3 Calculation results, Exterior

1.3.2 3D luminance, View 2

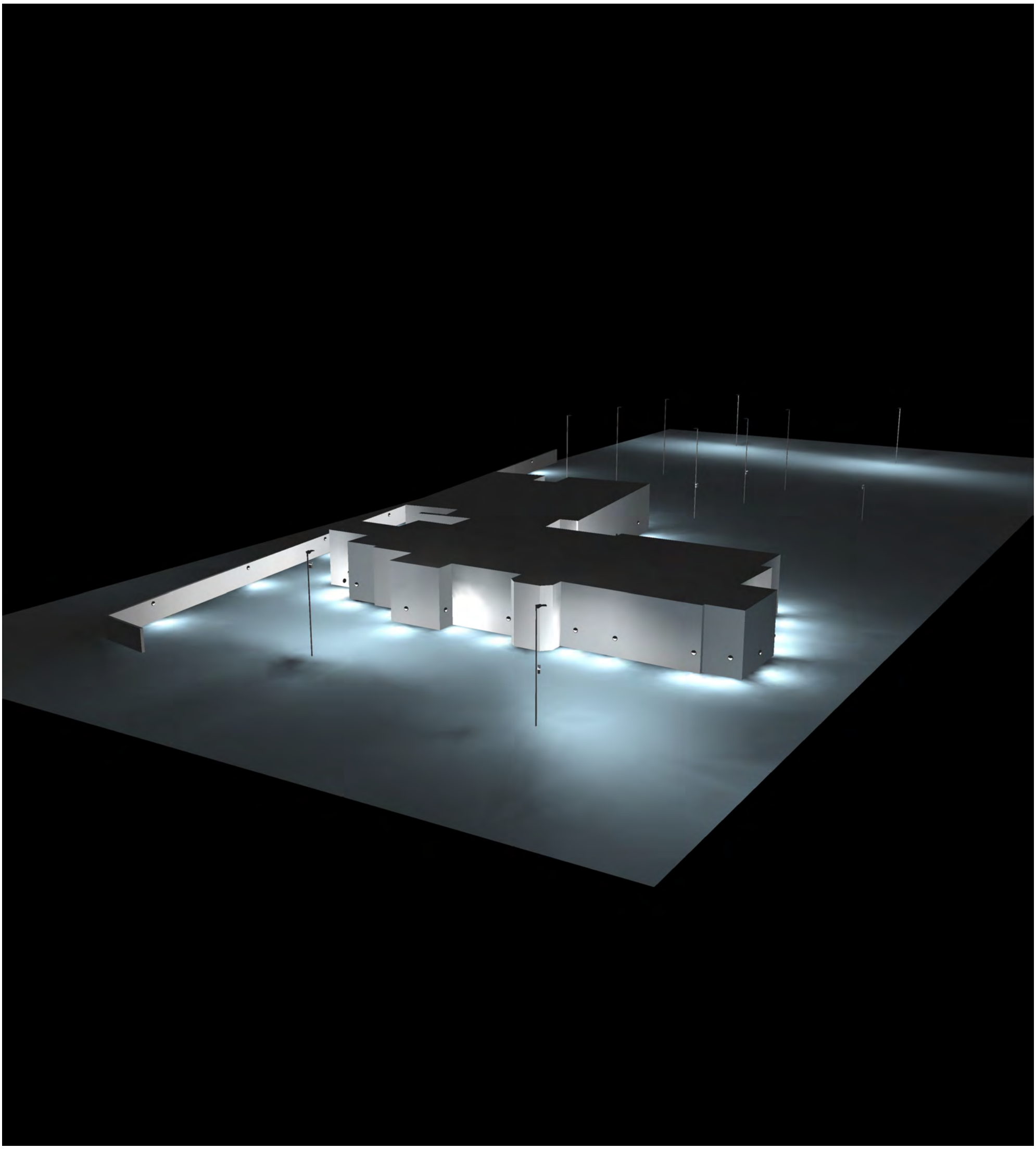

Luminance in the scene
Minimum: : 0 cd/m²
Maximum: : 101 cd/m²

1 Exterior

1.4 Summary, Exterior

1.4.1.1 Result overview (emergency lighting)



General

Calculation algorithm used	: Direct component
Maintenance factor	: 0.8
Height (phot.centre)	-variable-
Maximum I	: 270 cd

Escape routes:

No.	Central axis Emin [lx]	Emax [lx]	Ud	Surface Emin [lx]	Emax [lx]
Escape route 1					
Calculation field: 61.24m x 1m (306 x 9 pts), Height = 0.00m					
1	1.44 lx	13.57 lx	1: 9.42	0.60 lx	13.96 lx
	>= 1 lx		>= 1 : 40	>= 0.5 lx	
Escape route 2					
Calculation field: 11.8m x 1m (59 x 9 pts), Height = 0.00m					
2	2.46 lx	12.89 lx	1: 5.24	1.48 lx	13.57 lx
	>= 1 lx		>= 1 : 40	>= 0.5 lx	
Escape route 3					
Calculation field: 6.37m x 1m (32 x 9 pts), Height = 0.00m					
3	2.77 lx	8.96 lx	1: 3.23	2.35 lx	12.10 lx
	>= 1 lx		>= 1 : 40	>= 0.5 lx	
Escape route 4					
Calculation field: 48.27m x 1m (241 x 9 pts), Height = 0.00m					
4	1.37 lx	13.19 lx	1: 9.63	0.99 lx	13.19 lx
	>= 1 lx		>= 1 : 40	>= 0.5 lx	

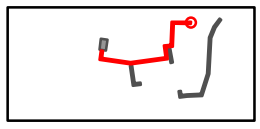
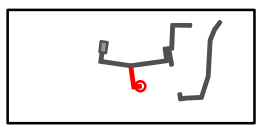
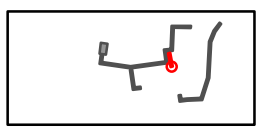
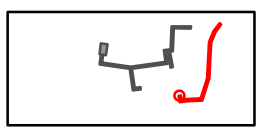

Anti panic area:

No.	Surface Emin [lx]	Emax [lx]	Ud
1 Muster Point			
Calculation field: 3m x 5m (5 x 8 pts), Height = 0.00m			
1	6.72 lx	22.45 lx	1: 3.34
	>= 5 lx		>= 1 : 40

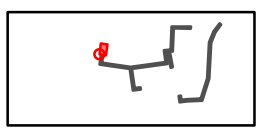

Object : Vincent House, Horsham - External Only
Installation : Proposed New Lighting
Project number :
Date : 08.10.2024 Rev I

1 Exterior

1.4 Summary, Exterior

1.4.1.1 Result overview (emergency lighting)

Type No.\Make

ANSELL

6 32E x 
Order No. : ALUCLED/B/M3 - WW 18W -- Emergency Lighting --
Luminaire name : BULKHEADS - Lucca Black
Equipment : 1 x LED 18 W / 1169 lm
Emergency : 211.9 lm (18.1 %)

7 5E x 
Order No. : ATSLED/3NM/ST/HO -- Emergency Lighting --
Luminaire name : EMERGENCY - Owl Twin Spot High Output
with : 2 x ATSLED/3NM/ST_H
Equipment : 1 x LED 3 W / 353 lm (0%)
Emergency : 353 lm

Object : Vincent House, Horsham - External Only
Installation : Proposed New Lighting
Project number :
Date : 08.10.2024 Rev I

1 Exterior

1.1 Summary, Exterior

1.1.1 Result overview, Muga Pitch

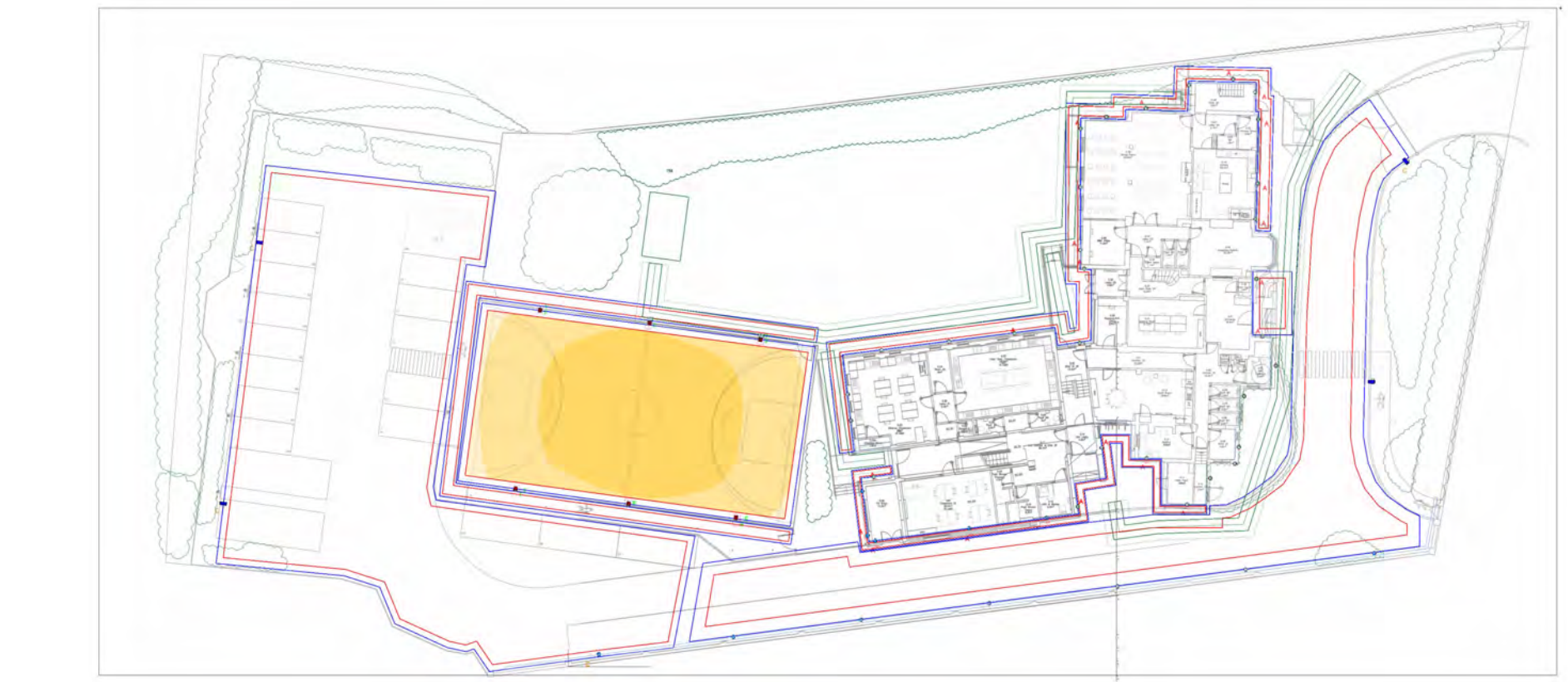

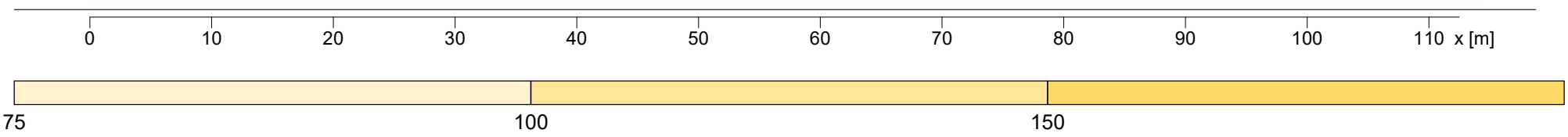

General

Calculation algorithm used	Average indirect fraction
Maintenance factor	0.80
Total luminous flux	126666.00 lm
Total power	894.0 W
Total power per area (360.13 m²)	2.48 W/m² (1.68 W/m²/100lx)

Muga Pitch	**Reference plane 2.1**
	Horizontal
$\bar{E}_m$	148 lx
E_{min}	95 lx
$E_{min}/\bar{E}_m$ (U_o)	0.64
E_{min}/E_{max} (U_d)	0.53
Position	0.00 m

Type No.\Make

		ANSELL	
3	6 x	Order No.	: AAZLED150/ASY
		Luminaire name	: FLOODLIGHTS - Aztec Asymmetric
		Equipment	: 1 x LED single 840 149 W / 21111 lm

Lighting projects will be designed to meet European and UK based legislation, as well as CIBSE guidelines, applicable to the location in which the installation is to take place, in additions to any specific client requirements, where appropriate, and all stated illuminance values will have been calculated based upon overall average values, with acceptable uniformity for the individual room reference plane.

Emergency lighting designs will be calculated in accordance with the appropriate legislation applicable to the country of installation, whether that be the current BS EN 1838 and BS EN 50172 standards, the BS5266-1, Code of Practice, which takes the form of guidance and recommendations, or the Irish Standard, I.S.3217.

Consultation between the responsible person, the owner/developer, and/or the occupier of the premises, the architect, the installation contractor, and enforcing authorities, together with the lighting designer, should have been arranged at a very early stage to define the way in which the system is intended to operate, and plans should be made available, to assist with the consultation and the design process.

The UK legislation imposes a duty on persons, including employers and persons with control of the premises to carry out a risk assessment, and take such precautions as to ensure as far as reasonably practicable, the safety of the occupants, including a safe means of escape, along escape routes and through exits to a place of safety.

The emergency lighting needs to be checked and approved by a local fire control officer and approved by the building owner.

In the absence of appropriate criteria, the emergency lighting design does not include a calculation for certain emergency location requirements, such as for call points, fire alarm panels, firefighting equipment and fire extinguisher positions, first aid points, and push-bars, where these locations have not been included on the supplied drawings, resulting in the situation that if increased illumination levels are required, they will not have been included within the design.

In the absence of a Fire Strategy plan, certain assumptions have been made regarding providing the optimum routes to exit, based upon the shortest distances between locations and the final exit. These are to be reviewed on site to verify the accuracy prior to proceeding to order/installation.

As Ansell has not been issued with a risk assessment document, the company cannot accept responsibility or liability for any inaccuracies caused in the emergency lighting design or equipment offered, therefore the emergency design must be accurately checked and verified by a responsible person or building owner/building user to confirm that assumed risk assessments made are deemed to be correct.

All interior spaces of less than 60m2 will be assumed as being not of ‘high risk’, unless the company is in receipt of a copy of the appropriate risk assessment for the spaces under consideration, and therefore as such, the design of emergency lighting will not be included in these areas, at this design stage.

Following the verification process for the emergency lighting design with regard to the information contained within the design fully meeting the specification for the application, it is to be noted that in all circumstances where assumptions used in the emergency lighting calculations are deemed to be incorrect, Ansell must be made aware of this situation immediately, and definitely prior to any order being placed, allowing the company to amend the emergency calculations, based upon the issue of an amended or new risk assessment.

In respect of the content below, the term Ansell Lighting relates to Ansell Electrical Products Ltd, for both UK and International.

Ansell Lighting will at the request of the Purchaser, agree to supply lighting design services, either directly or to a Third Party, so, as to develop a lighting scheme for which Ansell Lighting will make no charge. Ansell Lighting is not under any obligation to provide such services. Where appropriate, the Purchaser shall make all suitable arrangements for Ansell Lighting to have access to the site and shall provide such other assistance as may be deemed necessary to enable the company to provide such lighting design services. Any drawings, plans, computer aided designs, survey reports, specifications & other material arising from the lighting scheme will remain the absolute property of Ansell Lighting.

It is the responsibility of the person specifying the requirements of the request for a lighting design to provide all the required information and detail for the lighting scheme to be undertaken, whether that be, the Architect, the Consulting Engineer, the Building Contractor, the Electrical Contractor, or the Purchaser. In failing to provide all such information, the completed lighting design may not meet the client's requirements or be unable to provide compliance with current legislation. Current legislation considered on lighting schemes, includes (but is not restricted to) Building Regulation Approved Documents, British Standard Publications, European Standards, European Directives, Statutory Instruments, Health & Safety Publications, CIBSE Lighting Guides and other appropriate documents as deemed necessary.

All design criteria used in the lighting project, unless otherwise specified by the Purchaser or Client will have been assumed by the designer. This relates to all information not supplied with the request, but which is required to undertake the calculations in order to achieve the resultant lighting design. This covers all aspects of the design process, including, (but not restricted to) the space(s) dimensions, height, reflectance(s), and maintenance factor, the LED light source(s) their types, wattage(s) and colour temperature(s), the types of luminaire(s) whether that be mains and/or integrated/stand-alone emergency, their mounting height(s), position(s), and orientation(s), the type(s) of LED driver(s), and any luminaire attachments, or other information required that the designer deems necessary for the design to be calculated.

The lighting scheme will be calculated, by computer aided design, (where applicable) and by other means, (where not) so as to achieve certain illumination criteria. Unless, otherwise specified, all values of illumination, uniformity and levels of glare achieved will be based upon those given within the relevant National and International Standards and/or Regulations as well as the CIBSE Lighting Guides. Consideration will be taken to determine an adequate value of illumination for a specific area, such as categorisation of the space, the facilitation of quick and accurate work, the contribution of safety to persons and in creating a good visual environment. Other information not specified will be assumed by the designer.

Ansell Lighting will undertake external lighting schemes for Purchasers which may require planning approval from the local authority in which a lighting scheme is to be installed. It is not the responsibility of Ansell Lighting to seek such planning approval for an installation, however Ansell Lighting can assist, where possible, in providing design information for such an application, in respect of the lighting equipment aspect of the project only. If subsequently, changes to the design are requested, then it is the responsibility of the Purchaser to inform the local authority of such changes and to seek approval of those changes to the planning application.

It is the full responsibility of the purchaser and/or installing electrical contractor to cross-reference all luminaire types and quantities against the relevant computer-generated design and/or layout drawings & supplied quotation to verify that the information supplied by Ansell Lighting is both correct in respect of achieving the solution which meets the received specification and that is acceptable to the person specifying the requirements. Errors and omissions excepted.

If the completed lighting scheme is deficient in any respect, then it is the responsibility of the Purchaser to inform Ansell Lighting at the earliest opportunity, and in all cases, prior to any installation. If, however, the lighting scheme has already been installed, prior to any deficiency being known, then the Purchaser has one month from the date of commencement of operation of the installation, to notify Ansell Lighting in writing of this deficiency, detailing the ways in which the lighting is deficient. If Ansell Lighting receives no such notification within the aforementioned time period, then Ansell Lighting shall be entitled to assume that the lighting scheme meets with the specified requirements. Ansell Lighting must upon receipt of the notification set out above, be allowed permitted access of the premises in question for the purposes of remedying the defect. Ansell Lighting shall be under no obligation to remedy defects in the lighting system which arises from its reliance on the information, specifications or data supplied to the Purchaser.

Ansell Lighting shall not be liable for any business interruption, loss of profits, contracts, goodwill or anticipated savings, loss arising from any Third Party claims or any special indirect or consequential loss (whether or not foreseeable) to the Purchaser / Third Party which may arise as a result of the lighting scheme failing to meet the Purchaser's / Third party's requirements or for problems arising or which may arise as a result of incorrect installation of the goods by or on behalf of the Purchaser / Third Party or arising or which may arise as a result of the Purchaser / Third Party failing to use the goods as specifically recommended by Ansell Lighting for the purposes of the lighting scheme. Save as expressly provided in these conditions all terms, conditions, representations, and warranties (whether implied or not) relating to the sale of goods and/or the supply of services are excluded to the fullest extent permitted by law. The supply of all services and goods to the Purchaser are undertaken within the Terms and Conditions of sale from Ansell Lighting, a copy of which is available upon request.

For and on behalf of Ansell Electrical Products Ltd.