Tullys

05 January 2023

Engineering Note

14937

Bluecoat Sports Centre Expansion – Phase 1, Smith Sports Civils

1 Introduction

1.1 This technical note has been prepared in response to the refusal of the Proposal: Application for Approval of Details Reserved by Condition 4 on approved application DC/23/0026.

Site: Christs Hospital School, The Avenue, Christs Hospital, West Sussex

The letter dated 18th January 2024 states "The main issues include:

1. CV value of 1 required
2. FSR rainfall has been superseded as it underestimates the volume of water.
3. Please can FEH2022 be used instead.
4. Please can maximum level results be provided instead of cascade summary.
5. Calculations to demonstrate 50% AEP rainfall event does not surcharge in the drainage network".

In response to Points 1-4, the appended InfoDrainage simulation results have been updated to include a CV value of 1 and FEH 2022 rainfall data. The drainage calculations also identify the maximum water levels within the drainage system.

Regarding Point 5, the results show a number of pipes surcharging in the 2% AEP rainfall event:

<u>Pipes 1.007, 2.005, 2.012, 11.001</u>

By inspection of the longitudinal sections of these pipes, they do not appear to be surcharged, see the figures below.

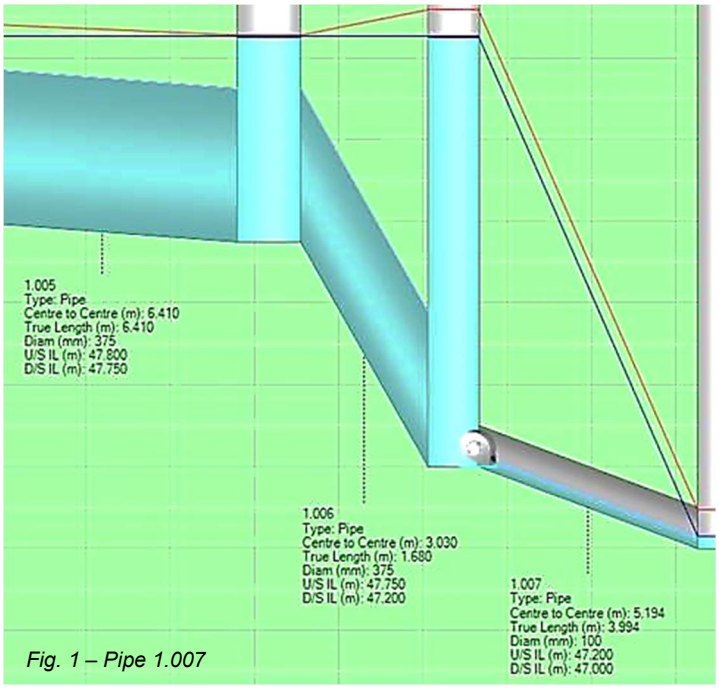

Fig. 1 – Pipe 1.007

Address Sheridan House, Hartfield Road, Forest Row, East Sussex, RH18 5EA

Tel 01342 828 000

Email info@tullys.uk

Tully De'Ath (Consultants) Ltd. Registered Number: 2493115. Registered address as above. Members of ACE. Investors in People. BS EN ISO9001. BS EN 14001

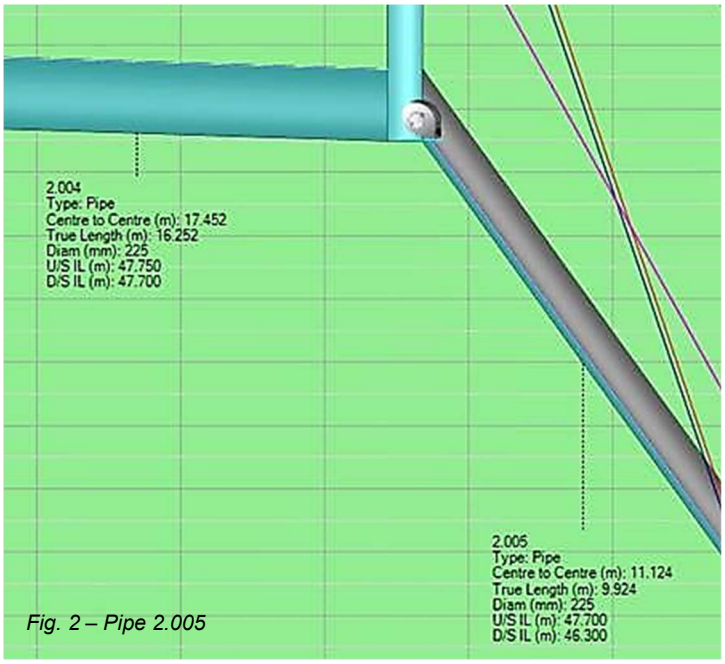

Fig. 2 – Pipe 2.005

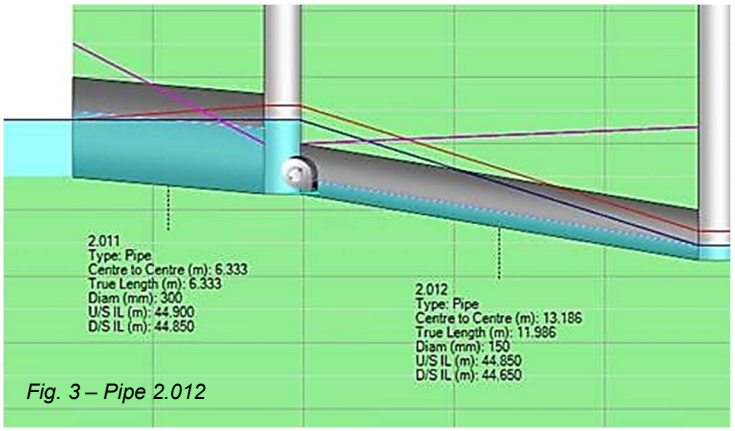

Fig. 3 – Pipe 2.012

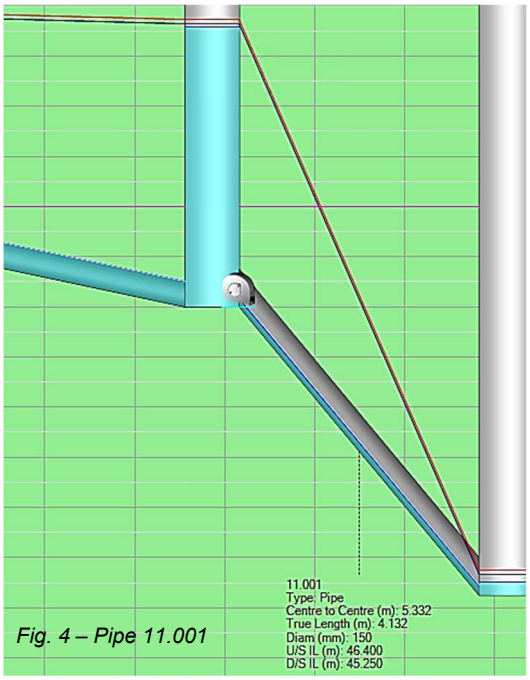

Fig. 4 – Pipe 11.001

By visual inspection and the fact that all of these pipes are just downstream of flow control structures and the maximum flow rate does not exceed the pipe capacities, we conclude that InfoDrainage is falsely reporting these particular connections as surcharged.

Pipe 1.006

This pipe is a connection between an attenuation tank and flow control structure and is expected to surcharge.

Pipes 2.001-2.004, 8.001, 10.000

These connections form part of the shallow attenuation system in the car park. There are 9 areas of permeable paving in the car park, all linked via these connections which are surcharging by design to form a collective storage structure just upstream of a flow control structure.

2 Summary

Based on the above information, and the simulation results showing that the network does not surcharge in free-flowing conditions, this demonstrates that the 50% AEP event does not surcharge in the network.

Appendix A – Simulation Results



Padel Additional

Type : Catchment Area

Area (ha)	0.05

Dynamic Sizing

Runoff Method	Time of Concentration
Summer Volumetric Runoff	1.000
Winter Volumetric Runoff	1.000
Time of Concentration (mins)	5
Percentage Impervious (%)	100



Adventure Trails

Type : Catchment Area

Area (ha)	0.09

Dynamic Sizing

Runoff Method	Time of Concentration
Summer Volumetric Runoff	1.000
Winter Volumetric Runoff	1.000
Time of Concentration (mins)	5
Percentage Impervious (%)	100



Hardstanding Spectator Area + Inner Bowl

Type : Catchment Area

Area (ha)	0.09

Dynamic Sizing

Runoff Method	Time of Concentration
Summer Volumetric Runoff	1.000
Winter Volumetric Runoff	1.000
Time of Concentration (mins)	5
Percentage Impervious (%)	100



Access Road

Type : Catchment Area

Area (ha)	0.023

Dynamic Sizing

Runoff Method	Time of Concentration
Summer Volumetric Runoff	1.000
Winter Volumetric Runoff	1.000
Time of Concentration (mins)	5
Percentage Impervious (%)	100



Area Car Park (9)

Type : Catchment Area

Area (ha)	0.076

Dynamic Sizing

Runoff Method	Time of Concentration
Summer Volumetric Runoff	1.000
Winter Volumetric Runoff	1.000
Time of Concentration (mins)	5
Percentage Impervious (%)	100



Padel Courts

Type : Catchment Area

Area (ha)	0.274

Dynamic Sizing

Runoff Method	Time of Concentration
Summer Volumetric Runoff	1.000
Winter Volumetric Runoff	1.000
Time of Concentration (mins)	5
Percentage Impervious (%)	100



Area Car Park (1)

Type : Catchment Area

Area (ha)	0.06

Dynamic Sizing

Runoff Method	Time of Concentration
Summer Volumetric Runoff	1.000
Winter Volumetric Runoff	1.000
Time of Concentration (mins)	5
Percentage Impervious (%)	100



Area Car Park (2)

Type : Catchment Area

Area (ha)	0.063

Dynamic Sizing

Runoff Method	Time of Concentration
Summer Volumetric Runoff	1.000
Winter Volumetric Runoff	1.000
Time of Concentration (mins)	5
Percentage Impervious (%)	100



Area Car Park (3)

Type : Catchment Area

Area (ha)	0.063

Dynamic Sizing

Runoff Method	Time of Concentration
Summer Volumetric Runoff	1.000
Winter Volumetric Runoff	1.000
Time of Concentration (mins)	5
Percentage Impervious (%)	100



Area Car Park (4)

Type : Catchment Area

Area (ha)	0.066

Dynamic Sizing

Runoff Method	Time of Concentration
Summer Volumetric Runoff	1.000
Winter Volumetric Runoff	1.000
Time of Concentration (mins)	5
Percentage Impervious (%)	100



Area Car Park (5)

Type : Catchment Area

Area (ha)	0.063

Dynamic Sizing

Runoff Method	Time of Concentration
Summer Volumetric Runoff	1.000
Winter Volumetric Runoff	1.000
Time of Concentration (mins)	5
Percentage Impervious (%)	100



Area Car Park (6)

Type : Catchment Area

Area (ha)	0.063

Dynamic Sizing

Runoff Method	Time of Concentration
Summer Volumetric Runoff	1.000
Winter Volumetric Runoff	1.000
Time of Concentration (mins)	5
Percentage Impervious (%)	100



Area Car Park (7)

Type : Catchment Area

Area (ha)	0.063

Dynamic Sizing

Runoff Method	Time of Concentration
Summer Volumetric Runoff	1.000
Winter Volumetric Runoff	1.000
Time of Concentration (mins)	5
Percentage Impervious (%)	100



Area Car Park (8)

Type : Catchment Area

Area (ha)	0.063

Dynamic Sizing

Runoff Method	Time of Concentration
Summer Volumetric Runoff	1.000
Winter Volumetric Runoff	1.000
Time of Concentration (mins)	5
Percentage Impervious (%)	100



Access Road (1)

Type : Catchment Area

Area (ha)	0.023

Dynamic Sizing

Runoff Method	Time of Concentration
Summer Volumetric Runoff	1.000
Winter Volumetric Runoff	1.000
Time of Concentration (mins)	5
Percentage Impervious (%)	100



Access Road (2)

Type : Catchment Area

Area (ha)	0.024

Dynamic Sizing

Runoff Method	Time of Concentration
Summer Volumetric Runoff	1.000
Winter Volumetric Runoff	1.000
Time of Concentration (mins)	5
Percentage Impervious (%)	100



Attenuation Tank 1

Type : Tank

Dimensions

Exceedance Level (m)	50.200
Depth (m)	1.800
Base Level (m)	48.400
Freeboard (mm)	0
Initial Depth (m)	0.000
Porosity (%)	95
Average Slope (1:X)	-4.442
Total Volume (m³)	103.228

Depth (m)	Area (m²)	Volume (m³)
0.000	90.000	0.000
1.200	90.000	102.600
1.201	0.001	102.629

Inlets

Outlets

Outlet

Outgoing Connection	1.000
Outlet Type	Free Discharge

Advanced

Perimeter	Circular
Length (m)	14.000



Attenuation Tank 2

Type : Tank

Dimensions

Exceedance Level (m)	49.940
Depth (m)	2.140
Base Level (m)	47.800
Freeboard (mm)	0
Initial Depth (m)	0.000
Porosity (%)	95
Average Slope (1:X)	-5.153
Total Volume (m³)	138.917

Depth (m)	Area (m²)	Volume (m³)
0.000	121.000	0.000
1.200	121.000	137.940
1.201	0.001	137.978

Inlets

Inlet

Inlet Type	Point Inflow
Incoming Item(s)	1.004
Bypass Destination	(None)
Capacity Type	No Restriction

Outlets

Outlet

Outgoing Connection	1.005
Outlet Type	Free Discharge

Advanced

Perimeter	Circular
Length (m)	11.000



Attenuation Tank 3

Type : Tank

Dimensions

Exceedance Level (m)	46.500
Depth (m)	1.600
Base Level (m)	44.900
Freeboard (mm)	0
Initial Depth (m)	0.000
Porosity (%)	95
Average Slope (1:X)	-14.498
Total Volume (m³)	323.934

Depth (m)	Area (m²)	Volume (m³)
0.000	425.000	0.000
0.800	425.000	323.000
0.801	0.001	323.135

Inlets

Inlet

Inlet Type	Point Inflow
Incoming Item(s)	2.010
Bypass Destination	(None)
Capacity Type	No Restriction

Outlets

Outlet

Outgoing Connection	2.011
Outlet Type	Free Discharge

Advanced

Perimeter	Circular
Length (m)	25.317



Car Park (2)

Type : Porous Paving

Dimensions

Exceedance Level (m)	49.800
Depth (m)	0.550
Base Level (m)	49.250
Paving Layer Depth (mm)	1
Membrane Percolation (m/hr)	10000.0
Porosity (%)	30
Length (m)	5.000
Long. Slope (1:X)	10000.00
Width (m)	47.500
Total Volume (m³)	39.116

Inlets

Inlet

Inlet Type	Point Inflow
Incoming Item(s)	Area Car Park (2)
Bypass Destination	(None)
Capacity Type	No Restriction

Outlets

Outlet

Outgoing Connection	3.000
Outlet Type	Free Discharge

Advanced

Conductivity (m/hr)	10000.0



Adventure Trails

Type : Porous Paving

Dimensions

Exceedance Level (m)	48.000
Depth (m)	0.340
Base Level (m)	47.660
Paving Layer Depth (mm)	115
Membrane Percolation (m/hr)	10000.0
Porosity (%)	30
Length (m)	20.000
Long. Slope (1:X)	10000.00
Width (m)	45.000
Total Volume (m^3)	60.750

Inlets

Inlet

Inlet Type	Point Inflow
Incoming Item(s)	Adventure Trails
Bypass Destination	(None)
Capacity Type	No Restriction

Outlets

Outlet

Outgoing Connection	11.000
Outlet Type	Free Discharge

Advanced

Conductivity (m/hr)	10000.0



Car Park (1)

Type : Porous Paving

Dimensions

Exceedance Level (m)	49.800
Depth (m)	0.550
Base Level (m)	49.250
Paving Layer Depth (mm)	1
Membrane Percolation (m/hr)	10000.0
Porosity (%)	30
Length (m)	5.000
Long. Slope (1:X)	10000.00
Width (m)	37.500
Total Volume (m³)	30.881

Inlets

Inlet

Inlet Type	Point Inflow
Incoming Item(s)	Area Car Park (1)
Bypass Destination	(None)
Capacity Type	No Restriction

Outlets

Outlet

Outgoing Connection	2.000
Outlet Type	Free Discharge

Advanced

Conductivity (m/hr)	10000.0



Car Park (3)

Type : Porous Paving

Dimensions

Exceedance Level (m)	49.800
Depth (m)	0.550
Base Level (m)	49.250
Paving Layer Depth (mm)	1
Membrane Percolation (m/hr)	10000.0
Porosity (%)	30
Length (m)	5.000
Long. Slope (1:X)	10000.00
Width (m)	55.000
Total Volume (m^3)	45.292

Inlets

Inlet

Inlet Type	Point Inflow
Incoming Item(s)	Area Car Park (3)
Bypass Destination	(None)
Capacity Type	No Restriction

Outlets

Outlet

Outgoing Connection	4.000
Outlet Type	Free Discharge

Advanced

Conductivity (m/hr)	10000.0



Car Park (4)

Type : Porous Paving

Dimensions

Exceedance Level (m)	49.800
Depth (m)	0.550
Base Level (m)	49.250
Paving Layer Depth (mm)	1
Membrane Percolation (m/hr)	10000.0
Porosity (%)	30
Length (m)	10.000
Long. Slope (1:X)	10000.00
Width (m)	45.000
Total Volume (m³)	74.115

Inlets

Inlet

Inlet Type	Point Inflow
Incoming Item(s)	Area Car Park (4)
Bypass Destination	(None)
Capacity Type	No Restriction

Outlets

Outlet

Outgoing Connection	5.000
Outlet Type	Free Discharge

Advanced

Conductivity (m/hr)	10000.0



Car Park (5)

Type : Porous Paving

Dimensions

Exceedance Level (m)	49.800
Depth (m)	0.550
Base Level (m)	49.250
Paving Layer Depth (mm)	1
Membrane Percolation (m/hr)	10000.0
Porosity (%)	30
Length (m)	5.000
Long. Slope (1:X)	10000.00
Width (m)	42.500
Total Volume (m³)	34.999

Inlets

Inlet

Inlet Type	Point Inflow
Incoming Item(s)	Area Car Park (5)
Bypass Destination	(None)
Capacity Type	No Restriction

Outlets

Outlet

Outgoing Connection	6.000
Outlet Type	Free Discharge

Advanced

Conductivity (m/hr)	10000.0



Car Park (6)

Type : Porous Paving

Dimensions

Exceedance Level (m)	49.800
Depth (m)	0.550
Base Level (m)	49.250
Paving Layer Depth (mm)	1
Membrane Percolation (m/hr)	10000.0
Porosity (%)	30
Length (m)	10.000
Long. Slope (1:X)	10000.00
Width (m)	35.000
Total Volume (m³)	57.645

Inlets

Inlet

Inlet Type	Point Inflow
Incoming Item(s)	Area Car Park (6)
Bypass Destination	(None)
Capacity Type	No Restriction

Outlets

Outlet

Outgoing Connection	7.000
Outlet Type	Free Discharge

Advanced

Conductivity (m/hr)	10000.0



Car Park (7)

Type : Porous Paving

Dimensions

Exceedance Level (m)	49.800
Depth (m)	0.550
Base Level (m)	49.250
Paving Layer Depth (mm)	1
Membrane Percolation (m/hr)	10000.0
Porosity (%)	30
Length (m)	5.000
Long. Slope (1:X)	10000.00
Width (m)	47.500
Total Volume (m³)	39.116

Inlets

Inlet

Inlet Type	Point Inflow
Incoming Item(s)	Area Car Park (7)
Bypass Destination	(None)
Capacity Type	No Restriction

Outlets

Outlet

Outgoing Connection	8.000
Outlet Type	Free Discharge

Advanced

Conductivity (m/hr)	10000.0



Car Park (8)

Type : Porous Paving

Dimensions

Exceedance Level (m)	49.800
Depth (m)	0.550
Base Level (m)	49.250
Paving Layer Depth (mm)	1
Membrane Percolation (m/hr)	10000.0
Porosity (%)	30
Length (m)	5.000
Long. Slope (1:X)	10000.00
Width (m)	47.500
Total Volume (m³)	39.116

Inlets

Inlet

Inlet Type	Point Inflow
Incoming Item(s)	Area Car Park (8)
Bypass Destination	(None)
Capacity Type	No Restriction

Outlets

Outlet

Outgoing Connection	9.000
Outlet Type	Free Discharge

Advanced

Conductivity (m/hr)	10000.0



Car Park (9)

Type : Porous Paving

Dimensions

Exceedance Level (m)	49.800
Depth (m)	0.550
Base Level (m)	49.250
Paving Layer Depth (mm)	1
Membrane Percolation (m/hr)	10000.0
Porosity (%)	30
Length (m)	16.737
Long. Slope (1:X)	10000.00
Width (m)	47.500
Total Volume (m³)	130.938

Inlets

Inlet

Inlet Type	Point Inflow
Incoming Item(s)	Area Car Park (9)
Bypass Destination	(None)
Capacity Type	No Restriction

Outlets

Outlet

Outgoing Connection	10.000
Outlet Type	Free Discharge

Advanced

Conductivity (m/hr)	10000.0

Project:	Date:		
Bluecoat Sports Expansion Project Phase 1	13/03/2024		
	Designed by: WC	Checked by: AJP	Approved By: -
Report Details: Type: Inflow Summary Storm Phase: Phase	Company Address:		

Inflow Label	Connected To	Flow (L/s)	Runoff Method	Area (ha)	Percentage Impervious (%)	Urban Creep (%)	Adjusted Percentage Impervious (%)	Area Analysed (ha)
Access Road	S92		Time of Concentration	0.023	100	0	100	0.023
Access Road (1)	S91		Time of Concentration	0.023	100	0	100	0.023
Access Road (2)	S90		Time of Concentration	0.024	100	0	100	0.024
Adventure Trails	Adventure Trails		Time of Concentration	0.090	100	0	100	0.090
Area Car Park (1)	Car Park (1)		Time of Concentration	0.060	100	0	100	0.060
Area Car Park (2)	Car Park (2)		Time of Concentration	0.063	100	0	100	0.063
Area Car Park (3)	Car Park (3)		Time of Concentration	0.063	100	0	100	0.063
Area Car Park (4)	Car Park (4)		Time of Concentration	0.066	100	0	100	0.066
Area Car Park (5)	Car Park (5)		Time of Concentration	0.063	100	0	100	0.063
Area Car Park (6)	Car Park (6)		Time of Concentration	0.063	100	0	100	0.063
Area Car Park (7)	Car Park (7)		Time of Concentration	0.063	100	0	100	0.063
Area Car Park (8)	Car Park (8)		Time of Concentration	0.063	100	0	100	0.063
Area Car Park (9)	Car Park (9)		Time of Concentration	0.076	100	0	100	0.076
Hardstanding Spectator Area + Inner Bowl	S49		Time of Concentration	0.090	100	0	100	0.090
Padel Additional	S82		Time of Concentration	0.050	100	0	100	0.050
Padel Courts	S80		Time of Concentration	0.274	100	0	100	0.274
TOTAL		**0.0**		**1.154**				**1.154**

Project:	Date:		
Bluecoat Sports Expansion Project Phase 1	13/03/2024		
	Designed by:	Checked by:	Approved By:
	WC	AJP	-
Report Details:	Company Address:		
Type: Network Design Criteria Storm Phase: Phase			

Flow Options

Peak Flow Calculation	(UK) Modified Rational Method
Min. Time of Entry (mins)	5
Max. Travel Time (mins)	30

Pipe Options

Lock Slope Options	None
Design Options	Minimise Excavation
Design Level	Level Soffits
Min. Cover Depth (m)	1.200
Min. Slope (1:X)	500.00
Max. Slope (1:X)	40.00
Min. Velocity (m/s)	1.0
Max. Velocity (m/s)	3.0
Use Flow Restriction	☐
Reduce Channel Depths	☐

Pipe Size Library

Default

Add. Increment (mm)	75
Max. Diameter (mm)	0

Diameter (mm)	Min. Slope (1:X)	Max. Slope (1:X)
100	0.00	0.00
150	0.00	0.00

Manhole Options

Apply Offset	☐

Manhole Size Library

Default

Diameter / Width

Connection (mm)	Diameter / Length (m)	Width (m)
0	1.200	0.000
375	1.350	0.000
500	1.500	0.000
750	1.800	0.000

Additional Sizing

Connection (mm)	900
Diameter / Length (m)	0.900
Width (m)	0.000

Depth

Depth (m)	Diameter / Length (m)	Width (m)
0.000	1.050	0.000
1.500	1.200	0.000

Access

Depth (m)	Ladder Protrusion (mm)
0.000	130
3.000	230

Benching Requirements

Landing Width (mm)	500
Benching Width (mm)	225

Project:	Date:		
Bluecoat Sports Expansion Project Phase 1	13/03/2024		
	Designed by: WC	Checked by: AJP	Approved By: -
Report Details: Type: Outfall Details Storm Phase: Phase	Company Address:		

Outfalls

Outfall	Outfall Type	Fixed Surcharged Level (m)	Level Curve
ExSWMH	Free Discharge		
ExSWMH (1)	Free Discharge		

Project:	Date:		
Bluecoat Sports Expansion Project Phase 1	13/03/2024		
	Designed by: WC	Checked by: AJP	Approved By: -
Report Title: Rainfall Analysis Criteria	Company Address:		

Runoff Type	Dynamic
Output Interval (mins)	5
Time Step	Default
Urban Creep	Apply Global Value
Urban Creep Global Value (%)	0
Junction Flood Risk Margin (mm)	300
Perform No Discharge Analysis	☐

Project:	Date:		
Bluecoat Sports Expansion Project Phase 1	13/03/2024		
	Designed by:	Checked by:	Approved By:
	WC	AJP	-
Report Details: Type: Junctions Summary Storm Phase: Phase	Company Address:		

FEH: 2 years: Increase Rainfall (%): +0: Critical Storm Per Item: Rank By: Max. Depth

Junction	Storm Event	Cover Level (m)	Invert Level (m)	Max. Level (m)	Max. Depth (m)	Max. Inflow (L/s)	Max. Resident Volume (m³)	Max. Flooded Volume (m³)	Max. Outflow (L/s)	Total Discharge Volume (m³)	Status
S79	FEH: 2 years: +0 %: 15 mins: Summer	50.000	48.300	48.300	0.000	0.0	0.000	0.000	0.0	0.000	OK
S80	FEH: 2 years: +0 %: 240 mins: Winter	49.940	47.900	48.276	0.376	12.4	0.425	0.000	11.6	70.168	Surcharged
S82	FEH: 2 years: +0 %: 240 mins: Winter	49.940	47.750	48.276	0.526	2.6	0.930	0.000	2.2	51.464	Surcharged
S58	FEH: 2 years: +0 %: 360 mins: Winter	49.800	47.700	49.366	1.666	4.4	1.884	0.000	3.1	124.043	Surcharged
S53	FEH: 2 years: +0 %: 240 mins: Summer	48.000	46.400	47.670	1.270	3.1	1.436	0.000	1.8	21.092	Surcharged
S49	FEH: 2 years: +0 %: 15 mins: Summer	48.000	45.250	45.344	0.094	19.0	0.106	0.000	18.0	11.086	OK
S51	FEH: 2 years: +0 %: 1440 mins: Winter	46.800	44.950	45.099	0.149	6.0	0.168	0.000	5.9	341.514	OK
S52	FEH: 2 years: +0 %: 1440 mins: Winter	46.200	44.850	45.098	0.248	4.0	0.280	0.000	4.0	339.869	Surcharged
S78	FEH: 2 years: +0 %: 15 mins: Summer	51.200	48.350	48.350	0.000	0.0	0.000	0.000	0.0	0.000	OK
S81	FEH: 2 years: +0 %: 240 mins: Winter	49.940	47.850	48.276	0.426	11.6	0.482	0.000	11.3	69.578	Surcharged
S83	FEH: 2 years: +0 %: 240 mins: Winter	49.940	47.200	48.276	1.076	2.2	1.217	0.000	2.0	50.187	Surcharged
ExSWMH	FEH: 2 years: +0 %: 240 mins: Winter	49.940	47.000	47.028	0.028	2.0	0.000	0.000	2.0	50.155	OK
S54	FEH: 2 years: +0 %: 360 mins: Winter	49.850	48.550	49.367	0.817	3.2	0.924	0.000	1.8	29.456	Surcharged
S55	FEH: 2 years: +0 %: 360 mins: Winter	49.850	48.400	49.367	0.967	1.8	1.094	0.000	1.6	28.569	Surcharged
S56	FEH: 2 years: +0 %: 360 mins: Winter	49.850	48.175	49.367	1.192	2.8	1.348	0.000	1.6	27.812	Surcharged
S57	FEH: 2 years: +0 %: 360 mins: Winter	49.825	47.750	49.367	1.617	6.0	1.828	0.000	4.4	110.671	Surcharged
S59	FEH: 2 years: +0 %: 360 mins: Winter	49.825	48.295	49.367	1.072	1.3	1.212	0.000	1.0	14.232	Surcharged
S47	FEH: 2 years: +0 %: 360 mins: Winter	48.000	46.300	46.339	0.039	3.1	0.044	0.000	3.1	116.324	OK
S48	FEH: 2 years: +0 %: 360 mins: Summer	48.000	46.050	46.078	0.028	3.1	0.031	0.000	3.1	115.710	OK
S50	FEH: 2 years: +0 %: 15 mins: Summer	47.419	45.100	45.197	0.097	18.0	0.109	0.000	16.7	10.882	OK
ExSWMH (1)	FEH: 2 years: +0 %: 1440 mins: Winter	46.250	44.650	44.693	0.043	4.0	0.000	0.000	4.0	339.864	OK
S92	FEH: 2 years: +0 %: 15 mins: Summer	46.840	45.400	45.492	0.092	14.3	0.104	0.000	13.4	6.410	OK
S90	FEH: 2 years: +0 %: 15 mins: Summer	48.100	46.600	46.640	0.040	5.1	0.045	0.000	4.9	2.198	OK
S91	FEH: 2 years: +0 %: 15 mins: Summer	47.250	45.850	45.906	0.056	9.7	0.064	0.000	9.4	4.302	OK

Project:	Date:		
Bluecoat Sports Expansion Project Phase 1	13/03/2024		
	Designed by:	Checked by:	Approved By:
	WC	AJP	-
Report Details: Type: Junctions Summary Storm Phase: Phase	Company Address:		

FEH: 30 years: Increase Rainfall (%): +0: Critical Storm Per Item: Rank By: Max. Depth

Junction	Storm Event	Cover Level (m)	Invert Level (m)	Max. Level (m)	Max. Depth (m)	Max. Inflow (L/s)	Max. Resident Volume (m³)	Max. Flooded Volume (m³)	Max. Outflow (L/s)	Total Discharge Volume (m³)	Status
S79	FEH: 30 years: +0 %: 360 mins: Winter	50.000	48.300	48.662	0.362	12.0	0.410	0.000	1.0	45.290	OK
S80	FEH: 30 years: +0 %: 360 mins: Winter	49.940	47.900	48.662	0.762	17.3	0.862	0.000	16.1	165.742	Surcharged
S82	FEH: 30 years: +0 %: 360 mins: Winter	49.940	47.750	48.662	0.912	3.2	1.612	0.000	2.4	92.064	Surcharged
S58	FEH: 30 years: +0 %: 480 mins: Winter	49.800	47.700	49.518	1.818	5.5	2.056	0.000	3.2	190.102	Flood Risk
S53	FEH: 30 years: +0 %: 180 mins: Summer	48.000	46.400	47.734	1.334	4.4	1.509	0.000	1.9	31.159	Flood Risk
S49	FEH: 30 years: +0 %: 15 mins: Summer	48.000	45.250	45.402	0.152	42.8	0.172	0.000	40.9	22.859	OK
S51	FEH: 30 years: +0 %: 1440 mins: Summer	46.800	44.950	45.384	0.434	10.1	0.491	0.000	10.0	588.194	Surcharged
S52	FEH: 30 years: +0 %: 1440 mins: Summer	46.200	44.850	45.384	0.534	4.0	0.604	0.000	4.0	457.704	Surcharged
S78	FEH: 30 years: +0 %: 360 mins: Winter	51.200	48.350	48.662	0.312	11.8	0.353	0.000	1.0	42.579	OK
S81	FEH: 30 years: +0 %: 360 mins: Winter	49.940	47.850	48.662	0.812	16.1	0.919	0.000	15.9	138.135	Surcharged
S83	FEH: 30 years: +0 %: 360 mins: Winter	49.940	47.200	48.662	1.462	2.4	1.654	0.000	2.3	88.492	Surcharged
ExSWMH	FEH: 30 years: +0 %: 360 mins: Winter	49.940	47.000	47.030	0.030	2.3	0.000	0.000	2.3	88.457	OK
S54	FEH: 30 years: +0 %: 480 mins: Winter	49.850	48.550	49.519	0.969	2.3	1.096	0.000	2.2	47.911	Surcharged
S55	FEH: 30 years: +0 %: 480 mins: Winter	49.850	48.400	49.519	1.119	2.2	1.266	0.000	2.2	46.756	Surcharged
S56	FEH: 30 years: +0 %: 480 mins: Winter	49.850	48.175	49.519	1.344	2.5	1.520	0.000	2.2	45.506	Surcharged
S57	FEH: 30 years: +0 %: 480 mins: Winter	49.825	47.750	49.519	1.769	6.1	2.000	0.000	5.5	172.590	Surcharged
S59	FEH: 30 years: +0 %: 480 mins: Winter	49.825	48.295	49.519	1.224	1.3	1.384	0.000	1.0	22.831	Surcharged
S47	FEH: 30 years: +0 %: 960 mins: Summer	48.000	46.300	46.340	0.040	3.2	0.045	0.000	3.2	331.564	OK
S48	FEH: 30 years: +0 %: 720 mins: Summer	48.000	46.050	46.078	0.028	3.2	0.032	0.000	3.2	251.121	OK
S50	FEH: 30 years: +0 %: 1440 mins: Summer	47.419	45.100	45.385	0.285	7.9	0.322	0.000	7.9	540.144	OK
ExSWMH (1)	FEH: 30 years: +0 %: 720 mins: Winter	46.250	44.650	44.693	0.043	4.0	0.000	0.000	4.0	220.194	OK
S92	FEH: 30 years: +0 %: 15 mins: Summer	46.840	45.400	45.856	0.456	26.4	0.516	0.000	25.0	14.390	Surcharged
S90	FEH: 30 years: +0 %: 15 mins: Summer	48.100	46.600	46.661	0.061	11.4	0.069	0.000	11.1	4.928	OK
S91	FEH: 30 years: +0 %: 15 mins: Summer	47.250	45.850	45.978	0.128	22.0	0.144	0.000	15.6	9.647	OK

FEH: 100 years: Increase Rainfall (%): +40: Critical Storm Per Item: Rank By: Max. Depth

Junction	Storm Event	Cover Level (m)	Invert Level (m)	Max. Level (m)	Max. Depth (m)	Max. Inflow (L/s)	Max. Resident Volume (m³)	Max. Flooded Volume (m³)	Max. Outflow (L/s)	Total Discharge Volume (m³)	Status
S79	FEH: 100 years: +40 %: 600 mins: Winter	50.000	48.300	49.591	1.291	13.7	1.460	0.000	2.8	173.811	Surcharged
S80	FEH: 100 years: +40 %: 600 mins: Winter	49.940	47.900	49.591	1.691	20.2	1.913	0.000	13.7	352.759	Surcharged
S82	FEH: 100 years: +40 %: 600 mins: Winter	49.940	47.750	49.591	1.841	3.7	3.253	0.000	3.0	182.712	Surcharged
S58	FEH: 100 years: +40 %: 720 mins: Winter	49.800	47.700	49.795	2.095	6.6	2.370	0.000	3.5	323.096	Flood Risk
S53	FEH: 100 years: +40 %: 180 mins: Winter	48.000	46.400	47.839	1.439	3.7	1.627	0.000	2.0	34.301	Flood Risk
S49	FEH: 100 years: +40 %: 1440 mins: Winter	48.000	45.250	45.679	0.429	8.5	0.485	0.000	8.5	767.034	Surcharged
S51	FEH: 100 years: +40 %: 1440 mins: Winter	46.800	44.950	45.678	0.728	10.9	0.823	0.000	10.8	850.236	Surcharged
S52	FEH: 100 years: +40 %: 1440 mins: Winter	46.200	44.850	45.678	0.828	4.0	0.936	0.000	4.0	567.582	Surcharged
S78	FEH: 100 years: +40 %: 600 mins: Winter	51.200	48.350	49.591	1.241	13.4	1.404	0.000	2.7	170.338	Surcharged
S81	FEH: 100 years: +40 %: 600 mins: Winter	49.940	47.850	49.591	1.741	13.7	1.969	0.000	13.5	242.944	Surcharged
S83	FEH: 100 years: +40 %: 600 mins: Winter	49.940	47.200	49.591	2.391	3.0	2.704	0.000	3.0	175.609	Surcharged
ExSWMH	FEH: 100 years: +40 %: 600 mins: Winter	49.940	47.000	47.034	0.034	3.0	0.000	0.000	3.0	175.571	OK
S54	FEH: 100 years: +40 %: 720 mins: Winter	49.850	48.550	49.797	1.247	2.8	1.410	0.000	2.8	83.975	Flood Risk
S55	FEH: 100 years: +40 %: 720 mins: Winter	49.850	48.400	49.797	1.397	2.8	1.580	0.000	2.8	82.586	Flood Risk
S56	FEH: 100 years: +40 %: 720 mins: Winter	49.850	48.175	49.796	1.621	2.8	1.834	0.000	2.7	81.029	Flood Risk
S57	FEH: 100 years: +40 %: 720 mins: Winter	49.825	47.750	49.796	2.046	7.5	2.314	0.000	6.6	296.534	Flood Risk
S59	FEH: 100 years: +40 %: 720 mins: Winter	49.825	48.295	49.796	1.501	2.1	1.698	0.000	1.2	39.912	Flood Risk
S47	FEH: 100 years: +40 %: 720 mins: Winter	48.000	46.300	46.342	0.042	3.5	0.047	0.000	3.5	273.990	OK
S48	FEH: 100 years: +40 %: 360 mins: Winter	48.000	46.050	46.079	0.029	3.5	0.033	0.000	3.5	135.519	OK
S50	FEH: 100 years: +40 %: 1440 mins: Winter	47.419	45.100	45.678	0.578	8.5	0.654	0.000	8.3	764.654	Surcharged

Project: Bluecoat Sports Expansion Project Phase 1	Date: 13/03/2024		
	Designed by: WC	Checked by: AJP	Approved By: -
Report Details: Type: Junctions Summary Storm Phase: Phase	Company Address:		

ExSWMH (1)	FEH: 100 years: +40 %: 600 mins: Summer	46.250	44.650	44.693	0.043	4.0	0.000	0.000	4.0	213.818	OK
S92	FEH: 100 years: +40 %: 15 mins: Summer	46.840	45.400	46.619	1.219	42.5	1.378	0.000	36.0	25.411	Flood Risk
S90	FEH: 100 years: +40 %: 15 mins: Summer	48.100	46.600	46.990	0.390	20.0	0.442	0.000	12.1	8.676	Surcharged
S91	FEH: 100 years: +40 %: 15 mins: Summer	47.250	45.850	46.875	1.025	31.1	1.160	0.000	23.5	17.025	Surcharged

Project:	Date:		
Bluecoat Sports Expansion Project Phase 1	13/03/2024		
	Designed by:	Checked by:	Approved By:
	WC	AJP	-
Report Details:	Company Address:		
Type: Stormwater Controls Summary Storm Phase: Phase			

FEH: 2 years: Increase Rainfall (%): +0: Critical Storm Per Item: Rank By: Max. Avg. Depth

Stormwater Control	Storm Event	Max. US Level (m)	Max. DS Level (m)	Max. US Depth (m)	Max. DS Depth (m)	Max. Inflow (L/s)	Max. Resident Volume (m^3)	Max. Flooded Volume (m^3)	Total Lost Volume (m^3)	Max. Outflow (L/s)	Total Discharge Volume (m^3)	Percentage Available (%)	Status
Attenuation Tank 1	FEH: 2 years: +0 %: 15 mins: Summer	48.400	48.400	0.000	0.000	0.0	0.000	0.000	0.000	0.0	0.000	100.000	OK
Attenuation Tank 2	FEH: 2 years: +0 %: 240 mins: Winter	48.276	48.276	0.476	0.476	11.4	54.738	0.000	0.000	2.1	39.395	60.597	OK
Car Park (2)	FEH: 2 years: +0 %: 360 mins: Winter	49.367	49.367	0.117	0.117	2.2	8.338	0.000	0.000	1.3	15.604	78.684	OK
Adventure Trails	FEH: 2 years: +0 %: 240 mins: Summer	47.731	47.702	0.069	0.042	6.1	14.099	0.000	0.000	3.1	21.132	76.791	OK
Attenuation Tank 3	FEH: 2 years: +0 %: 1440 mins: Winter	45.098	45.098	0.198	0.198	5.9	79.976	0.000	0.000	4.0	339.888	75.311	OK
Car Park (1)	FEH: 2 years: +0 %: 360 mins: Winter	49.367	49.367	0.117	0.117	2.0	6.582	0.000	0.000	1.3	15.350	78.686	OK
Car Park (3)	FEH: 2 years: +0 %: 360 mins: Winter	49.367	49.367	0.116	0.117	2.2	9.600	0.000	0.000	1.2	15.165	78.804	OK
Car Park (4)	FEH: 2 years: +0 %: 360 mins: Winter	49.367	49.367	0.116	0.117	2.6	15.739	0.000	0.000	1.0	14.951	78.764	OK
Car Park (5)	FEH: 2 years: +0 %: 360 mins: Winter	49.367	49.367	0.116	0.117	2.2	7.417	0.000	0.000	1.3	15.919	78.808	OK
Car Park (6)	FEH: 2 years: +0 %: 360 mins: Winter	49.368	49.367	0.117	0.117	2.2	12.248	0.000	0.000	1.1	14.274	78.754	OK
Car Park (7)	FEH: 2 years: +0 %: 360 mins: Winter	49.367	49.367	0.116	0.117	2.2	8.303	0.000	0.000	1.3	15.612	78.772	OK
Car Park (8)	FEH: 2 years: +0 %: 360 mins: Winter	49.367	49.367	0.116	0.117	2.2	8.290	0.000	0.000	1.3	15.618	78.808	OK
Car Park (9)	FEH: 2 years: +0 %: 360 mins: Winter	49.368	49.367	0.116	0.117	3.7	27.797	0.000	0.000	0.8	19.084	78.771	OK

FEH: 30 years: Increase Rainfall (%): +0: Critical Storm Per Item: Rank By: Max. Avg. Depth

Stormwater Control	Storm Event	Max. US Level (m)	Max. DS Level (m)	Max. US Depth (m)	Max. DS Depth (m)	Max. Inflow (L/s)	Max. Resident Volume (m^3)	Max. Flooded Volume (m^3)	Total Lost Volume (m^3)	Max. Outflow (L/s)	Total Discharge Volume (m^3)	Percentage Available (%)	Status
Attenuation Tank 1	FEH: 30 years: +0 %: 360 mins: Winter	48.663	48.663	0.263	0.263	11.7	22.444	0.000	0.000	0.9	19.170	78.258	OK
Attenuation Tank 2	FEH: 30 years: +0 %: 360 mins: Winter	48.662	48.662	0.862	0.862	16.5	99.137	0.000	0.000	2.3	66.758	28.636	OK
Car Park (2)	FEH: 30 years: +0 %: 360 mins: Winter	49.519	49.520	0.269	0.270	4.0	19.180	0.000	0.000	1.1	20.524	50.968	OK
Adventure Trails	FEH: 30 years: +0 %: 180 mins: Summer	47.776	47.766	0.114	0.106	14.0	29.536	0.000	0.000	4.4	32.805	51.381	OK
Attenuation Tank 3	FEH: 30 years: +0 %: 1440 mins: Summer	45.384	45.384	0.484	0.484	10.0	195.575	0.000	0.000	4.0	458.370	39.625	OK
Car Park (1)	FEH: 30 years: +0 %: 360 mins: Winter	49.519	49.519	0.269	0.269	3.8	15.138	0.000	0.000	1.5	21.793	50.980	OK
Car Park (3)	FEH: 30 years: +0 %: 480 mins: Winter	49.518	49.519	0.268	0.269	3.2	22.143	0.000	0.000	0.9	22.618	51.111	OK
Car Park (4)	FEH: 30 years: +0 %: 480 mins: Winter	49.519	49.519	0.268	0.269	4.1	36.247	0.000	0.000	0.8	19.863	51.094	OK
Car Park (5)	FEH: 30 years: +0 %: 480 mins: Winter	49.518	49.519	0.268	0.269	3.2	17.106	0.000	0.000	1.2	25.692	51.123	OK
Car Park (6)	FEH: 30 years: +0 %: 480 mins: Winter	49.519	49.519	0.268	0.269	3.2	28.191	0.000	0.000	0.8	18.959	51.096	OK
Car Park (7)	FEH: 30 years: +0 %: 480 mins: Winter	49.519	49.519	0.268	0.269	3.2	19.136	0.000	0.000	1.0	24.457	51.080	OK
Car Park (8)	FEH: 30 years: +0 %: 480 mins: Winter	49.518	49.519	0.268	0.269	3.2	19.120	0.000	0.000	1.0	24.464	51.120	OK
Car Park (9)	FEH: 30 years: +0 %: 480 mins: Winter	49.519	49.519	0.267	0.269	5.9	63.886	0.000	0.000	0.8	25.855	51.209	OK

FEH: 100 years: Increase Rainfall (%): +40: Critical Storm Per Item: Rank By: Max. Avg. Depth

Stormwater Control	Storm Event	Max. US Level (m)	Max. DS Level (m)	Max. US Depth (m)	Max. DS Depth (m)	Max. Inflow (L/s)	Max. Resident Volume (m³)	Max. Flooded Volume (m³)	Total Lost Volume (m³)	Max. Outflow (L/s)	Total Discharge Volume (m³)	Percentage Available (%)	Status
Attenuation Tank 1	FEH: 100 years: +40 %: 600 mins: Winter	49.591	49.591	1.191	1.191	13.2	101.839	0.000	0.000	2.7	67.546	1.345	OK
Attenuation Tank 2	FEH: 100 years: +40 %: 600 mins: Winter	49.591	49.591	1.791	1.791	14.0	138.538	0.000	0.000	2.9	132.704	0.273	OK
Car Park (2)	FEH: 100 years: +40 %: 720 mins: Winter	49.797	49.797	0.546	0.547	4.0	38.951	0.000	0.000	1.2	41.749	0.423	OK
Adventure Trails	FEH: 100 years: +40 %: 180 mins: Winter	47.877	47.872	0.215	0.212	16.8	57.705	0.000	0.000	3.7	36.077	5.012	OK
Attenuation Tank 3	FEH: 100 years: +40 %: 1440 mins: Winter	45.678	45.678	0.778	0.778	10.8	314.021	0.000	0.000	4.0	568.681	3.060	OK
Car Park (1)	FEH: 100 years: +40 %: 720 mins: Winter	49.797	49.797	0.546	0.547	3.8	30.747	0.000	0.000	1.6	44.191	0.434	OK
Car Park (3)	FEH: 100 years: +40 %: 720 mins: Winter	49.796	49.796	0.545	0.546	4.0	45.034	0.000	0.000	0.8	37.500	0.571	OK
Car Park (4)	FEH: 100 years: +40 %: 720 mins: Winter	49.796	49.796	0.545	0.546	5.3	73.694	0.000	0.000	0.7	30.091	0.568	OK
Car Park (5)	FEH: 100 years: +40 %: 720 mins: Winter	49.796	49.796	0.545	0.546	4.0	34.794	0.000	0.000	1.5	44.617	0.586	OK
Car Park (6)	FEH: 100 years: +40 %: 720 mins: Winter	49.796	49.796	0.545	0.546	4.1	57.315	0.000	0.000	0.7	29.249	0.573	OK
Car Park (7)	FEH: 100 years: +40 %: 720 mins: Winter	49.796	49.796	0.546	0.546	4.0	38.907	0.000	0.000	1.2	41.764	0.536	OK
Car Park (8)	FEH: 100 years: +40 %: 720 mins: Winter	49.796	49.796	0.545	0.546	4.0	38.889	0.000	0.000	1.2	41.772	0.582	OK
Car Park (9)	FEH: 100 years: +40 %: 720 mins: Winter	49.796	49.796	0.544	0.546	7.8	130.025	0.000	0.000	0.9	40.532	0.697	OK

Project:	Date:		
Bluecoat Sports Expansion Project Phase 1	13/03/2024		
	Designed by:	Checked by:	Approved By:
	WC	AJP	-
Report Details: Type: Connections Summary Storm Phase: Phase	Company Address:		

FEH: 2 years: Increase Rainfall (%): +0: Critical Storm Per Item: Rank By: Max. Flow

Connection	Storm Event	Connection Type	From	To	Upstream Cover Level (m)	Max. US Water Level (m)	Max. Flow Depth (m)	Discharge Volume (m³)	Max. Velocity (m/s)	Flow / Capacity	Max. Flow (L/s)	Status
1.002	FEH: 2 years: +0 %: 15 mins: Summer	Pipe	S79	S80	50.000	48.300	0.082	0.000	0.0	0	0.0	OK
1.005	FEH: 2 years: +0 %: 60 mins: Winter	Pipe	Attenuation Tank 2	S82	49.940	48.134	0.359	6.468	0.6	0.02	3.5	OK
11.000	FEH: 2 years: +0 %: 180 mins: Summer	Pipe	Adventure Trails	S53	48.002	47.712	0.100	18.323	0.4	0.26	3.1	OK
11.001	FEH: 2 years: +0 %: 240 mins: Summer	Pipe	S53	S49	48.000	47.670	0.040	21.087	0.8	0.06	1.8	Surcharged
2.010	FEH: 2 years: +0 %: 15 mins: Summer	Pipe	S51	Attenuation Tank 3	46.800	45.058	0.060	17.093	2.9	0.26	28.7	OK
2.011	FEH: 2 years: +0 %: 1440 mins: Winter	Pipe	Attenuation Tank 3	S52	46.500	45.098	0.223	339.888	0.1	0.04	4.0	OK
1.000	FEH: 2 years: +0 %: 15 mins: Summer	Pipe	Attenuation Tank 1	S78	50.200	48.400	0.000	0.000	0.0	0	0.0	OK
1.001	FEH: 2 years: +0 %: 15 mins: Summer	Pipe	S78	S79	51.200	48.350	0.000	0.000	0.0	0	0.0	OK
1.003	FEH: 2 years: +0 %: 15 mins: Summer	Pipe	S80	S81	49.940	48.064	0.153	24.389	1.3	0.31	55.0	OK
1.004	FEH: 2 years: +0 %: 15 mins: Summer	Pipe	S81	Attenuation Tank 2	49.940	48.016	0.191	23.976	2.0	0.25	54.0	OK
1.006	FEH: 2 years: +0 %: 60 mins: Summer	Pipe	S82	S83	49.940	48.134	0.375	13.060	0.2	0	4.2	Surcharged
1.007	FEH: 2 years: +0 %: 240 mins: Winter	Pipe	S83	ExSWMH	49.940	48.276	0.028	50.155	1.1	0.17	2.0	Surcharged
2.001	FEH: 2 years: +0 %: 30 mins: Summer	Pipe	S54	S55	49.850	49.314	0.150	6.536	1.2	0.57	11.7	Surcharged
2.002	FEH: 2 years: +0 %: 30 mins: Summer	Pipe	S55	S56	49.850	49.313	0.150	5.287	1.0	0.51	12.3	Surcharged
2.003	FEH: 2 years: +0 %: 60 mins: Winter	Pipe	S56	S57	49.850	49.327	0.225	5.721	0.3	0.13	5.5	Surcharged
2.004	FEH: 2 years: +0 %: 15 mins: Summer	Pipe	S57	S58	49.825	49.290	0.225	6.507	0.5	0.35	9.7	Surcharged
2.000	FEH: 2 years: +0 %: 15 mins: Summer	Pipe	Car Park (1)	S54	49.801	49.304	0.150	3.248	0.9	0.21	6.7	OK
3.000	FEH: 2 years: +0 %: 15 mins: Summer	Pipe	Car Park (2)	S54	49.801	49.303	0.150	2.909	0.6	0.22	6.1	OK
4.000	FEH: 2 years: +0 %: 15 mins: Summer	Pipe	Car Park (3)	S57	49.801	49.297	0.150	2.585	0.7	0.17	5.8	OK

5.000	FEH: 2 years: +0 %: 60 mins: Summer	Pipe	Car Park (4)	S57	49.801	49.327	0.150	1.773	0.1	0.07	2.6	OK
6.000	FEH: 2 years: +0 %: 30 mins: Summer	Pipe	Car Park (5)	S57	49.801	49.310	0.150	4.300	0.9	0.16	7.3	OK
7.000	FEH: 2 years: +0 %: 60 mins: Summer	Pipe	Car Park (6)	S57	49.801	49.327	0.150	3.177	0.2	0.08	3.7	OK
8.001	FEH: 2 years: +0 %: 60 mins: Winter	Pipe	S59	S57	49.825	49.327	0.150	3.394	0.2	0.14	2.9	Surcharged
8.000	FEH: 2 years: +0 %: 15 mins: Summer	Pipe	Car Park (7)	S59	49.801	49.302	0.150	3.018	1.0	0.21	6.2	OK
9.000	FEH: 2 years: +0 %: 15 mins: Summer	Pipe	Car Park (8)	S57	49.801	49.297	0.150	3.030	1.0	0.17	6.7	OK
10.000	FEH: 2 years: +0 %: 360 mins: Winter	Pipe	Car Park (9)	S58	49.802	49.367	0.100	11.508	0.1	0.05	0.8	Surcharged
2.005	FEH: 2 years: +0 %: 360 mins: Winter	Pipe	S58	S47	49.800	49.366	0.030	116.445	1.0	0.02	3.1	Surcharged
2.006	FEH: 2 years: +0 %: 360 mins: Winter	Pipe	S47	S48	48.000	46.339	0.033	116.324	0.8	0.06	3.1	OK
2.007	FEH: 2 years: +0 %: 360 mins: Winter	Pipe	S48	S49	48.000	46.078	0.043	116.224	0.9	0.03	3.1	OK
2.008	FEH: 2 years: +0 %: 15 mins: Summer	Pipe	S49	S50	48.000	45.344	0.095	11.086	0.9	0.19	18.0	OK
2.009	FEH: 2 years: +0 %: 15 mins: Summer	Pipe	S50	S51	47.419	45.197	0.102	10.882	0.8	0.21	16.7	OK
2.012	FEH: 2 years: +0 %: 1440 mins: Winter	Pipe	S52	ExSWMH (1)	46.200	45.098	0.044	339.864	0.9	0.18	4.0	Surcharged
12.000	FEH: 2 years: +0 %: 15 mins: Summer	Pipe	S92	S51	46.840	45.492	0.100	6.410	1.1	0.67	13.4	OK
Pipe	FEH: 2 years: +0 %: 15 mins: Summer	Pipe	S90	S91	48.100	46.640	0.048	2.198	1.0	0.15	4.9	OK
Pipe (1)	FEH: 2 years: +0 %: 15 mins: Summer	Pipe	S91	S92	47.250	45.906	0.074	4.302	1.1	0.3	9.4	OK

Project:	Date:		
Bluecoat Sports Expansion Project Phase 1	13/03/2024		
	Designed by:	Checked by:	Approved By:
	WC	AJP	-
Report Details: Type: Connections Summary Storm Phase: Phase	Company Address:		

FEH: 30 years: Increase Rainfall (%): +0: Critical Storm Per Item: Rank By: Max. Flow

Connection	Storm Event	Connection Type	From	To	Upstream Cover Level (m)	Max. US Water Level (m)	Max. Flow Depth (m)	Discharge Volume (m³)	Max. Velocity (m/s)	Flow / Capacity	Max. Flow (L/s)	Status
1.002	FEH: 30 years: +0 %: 60 mins: Winter	Pipe	S79	S80	50.000	48.525	0.375	0.000	0.0	0.01	2.0	OK
1.005	FEH: 30 years: +0 %: 120 mins: Winter	Pipe	Attenuation Tank 2	S82	49.940	48.602	0.375	11.876	0.7	0.02	3.9	Surcharged
11.000	FEH: 30 years: +0 %: 30 mins: Winter	Pipe	Adventure Trails	S53	48.002	47.741	0.100	5.543	0.7	0.47	5.5	OK
11.001	FEH: 30 years: +0 %: 180 mins: Summer	Pipe	S53	S49	48.000	47.734	0.055	31.139	0.8	0.07	1.9	Flood Risk
2.010	FEH: 30 years: +0 %: 15 mins: Summer	Pipe	S51	Attenuation Tank 3	46.800	45.112	0.095	36.750	3.2	0.57	61.9	OK
2.011	FEH: 30 years: +0 %: 360 mins: Summer	Pipe	Attenuation Tank 3	S52	46.500	45.277	0.300	102.843	0.1	0.04	4.0	Surcharged
1.000	FEH: 30 years: +0 %: 60 mins: Winter	Pipe	Attenuation Tank 1	S78	50.200	48.525	0.150	0.000	0.0	0.01	1.8	OK
1.001	FEH: 30 years: +0 %: 60 mins: Winter	Pipe	S78	S79	51.200	48.525	0.200	0.000	0.0	0.01	1.9	OK
1.003	FEH: 30 years: +0 %: 15 mins: Summer	Pipe	S80	S81	49.940	48.299	0.375	53.175	1.4	0.69	121.3	Surcharged
1.004	FEH: 30 years: +0 %: 15 mins: Summer	Pipe	S81	Attenuation Tank 2	49.940	48.299	0.375	52.063	2.3	0.56	118.4	Surcharged
1.006	FEH: 30 years: +0 %: 15 mins: Winter	Pipe	S82	S83	49.940	48.300	0.375	4.600	0.1	0.01	8.2	Surcharged
1.007	FEH: 30 years: +0 %: 360 mins: Winter	Pipe	S83	ExSWMH	49.940	48.662	0.031	88.457	1.1	0.2	2.3	Surcharged
2.001	FEH: 30 years: +0 %: 15 mins: Winter	Pipe	S54	S55	49.850	49.391	0.150	7.117	1.3	0.92	18.9	Surcharged
2.002	FEH: 30 years: +0 %: 15 mins: Winter	Pipe	S55	S56	49.850	49.385	0.150	5.787	1.5	0.72	17.4	Surcharged

2.003	FEH: 30 years: +0 %: 15 mins: Winter	Pipe	S56	S57	49.850	49.378	0.225	3.281	0.5	0.31	12.9	Surcharged
2.004	FEH: 30 years: +0 %: 30 mins: Winter	Pipe	S57	S58	49.825	49.420	0.225	18.964	0.6	0.8	22.2	Surcharged
2.000	FEH: 30 years: +0 %: 15 mins: Summer	Pipe	Car Park (1)	S54	49.801	49.395	0.150	5.110	1.1	0.42	13.4	OK
3.000	FEH: 30 years: +0 %: 15 mins: Summer	Pipe	Car Park (2)	S54	49.801	49.394	0.150	3.699	0.8	0.37	10.1	OK
4.000	FEH: 30 years: +0 %: 15 mins: Summer	Pipe	Car Park (3)	S57	49.801	49.374	0.150	3.005	0.6	0.29	9.8	OK
5.000	FEH: 30 years: +0 %: 120 mins: Winter	Pipe	Car Park (4)	S57	49.801	49.496	0.150	1.013	0.1	0.05	2.0	Surcharged
6.000	FEH: 30 years: +0 %: 15 mins: Summer	Pipe	Car Park (5)	S57	49.801	49.377	0.150	5.290	1.0	0.34	15.3	OK
7.000	FEH: 30 years: +0 %: 15 mins: Winter	Pipe	Car Park (6)	S57	49.801	49.377	0.150	0.258	0.2	0.07	3.1	OK
8.001	FEH: 30 years: +0 %: 15 mins: Winter	Pipe	S59	S57	49.825	49.379	0.150	2.313	0.5	0.39	8.1	Surcharged
8.000	FEH: 30 years: +0 %: 15 mins: Summer	Pipe	Car Park (7)	S59	49.801	49.384	0.150	4.251	1.5	0.35	10.4	OK
9.000	FEH: 30 years: +0 %: 15 mins: Summer	Pipe	Car Park (8)	S57	49.801	49.376	0.150	4.385	0.8	0.32	13.0	OK
10.000	FEH: 30 years: +0 %: 480 mins: Winter	Pipe	Car Park (9)	S58	49.802	49.518	0.100	3.568	0.1	0.05	0.8	Surcharged
2.005	FEH: 30 years: +0 %: 480 mins: Winter	Pipe	S58	S47	49.800	49.518	0.030	167.792	1.0	0.02	3.2	Flood Risk
2.006	FEH: 30 years: +0 %: 480 mins: Winter	Pipe	S47	S48	48.000	46.340	0.034	167.668	0.9	0.06	3.2	OK
2.007	FEH: 30 years: +0 %: 480 mins: Winter	Pipe	S48	S49	48.000	46.078	0.047	167.565	0.9	0.03	3.2	OK
2.008	FEH: 30 years: +0 %: 15 mins: Summer	Pipe	S49	S50	48.000	45.402	0.155	22.859	1.1	0.43	40.9	OK
2.009	FEH: 30 years: +0 %: 15 mins: Summer	Pipe	S50	S51	47.419	45.258	0.160	22.599	1.0	0.48	38.4	OK

2.012	FEH: 30 years: +0 %: 720 mins: Winter	Pipe	S52	ExSWMH (1)	46.200	45.345	0.044	220.194	0.9	0.18	4.0	Surcharged
12.000	FEH: 30 years: +0 %: 15 mins: Summer	Pipe	S92	S51	46.840	45.856	0.150	14.390	1.4	1.26	25.0	Surcharged
Pipe	FEH: 30 years: +0 %: 15 mins: Summer	Pipe	S90	S91	48.100	46.661	0.095	4.928	0.9	0.35	11.1	OK
Pipe (1)	FEH: 30 years: +0 %: 15 mins: Winter	Pipe	S91	S92	47.250	45.949	0.150	9.651	1.0	0.52	16.4	OK

Project:	Date:		
Bluecoat Sports Expansion Project Phase 1	13/03/2024		
	Designed by:	Checked by:	Approved By:
	WC	AJP	-
Report Details: Type: Connections Summary Storm Phase: Phase	Company Address:		

FEH: 100 years: Increase Rainfall (%): +40: Critical Storm Per Item: Rank By: Max. Flow

Connection	Storm Event	Connection Type	From	To	Upstream Cover Level (m)	Max. US Water Level (m)	Max. Flow Depth (m)	Discharge Volume (m³)	Max. Velocity (m/s)	Flow / Capacity	Max. Flow (L/s)	Status
1.002	FEH: 100 years: +40 %: 15 mins: Winter	Pipe	S79	S80	50.000	48.586	0.375	0.000	0.1	0.05	10.2	OK
1.005	FEH: 100 years: +40 %: 360 mins: Summer	Pipe	Attenuation Tank 2	S82	49.940	49.536	0.375	64.865	0.7	0.02	4.0	Surcharged
11.000	FEH: 100 years: +40 %: 60 mins: Summer	Pipe	Adventure Trails	S53	48.002	47.847	0.100	11.960	1.0	0.66	7.9	Surcharged
11.001	FEH: 100 years: +40 %: 180 mins: Winter	Pipe	S53	S49	48.000	47.839	0.060	34.282	0.9	0.07	2.0	Flood Risk
2.010	FEH: 100 years: +40 %: 15 mins: Summer	Pipe	S51	Attenuation Tank 3	46.800	45.182	0.147	62.494	3.1	0.94	102.0	OK
2.011	FEH: 100 years: +40 %: 60 mins: Summer	Pipe	Attenuation Tank 3	S52	46.500	45.176	0.300	16.560	0.2	0.04	4.2	OK
1.000	FEH: 100 years: +40 %: 15 mins: Winter	Pipe	Attenuation Tank 1	S78	50.200	48.569	0.193	0.000	0.2	0.06	9.9	OK
1.001	FEH: 100 years: +40 %: 15 mins: Winter	Pipe	S78	S79	51.200	48.582	0.259	0.000	0.1	0.07	10.2	OK
1.003	FEH: 100 years: +40 %: 15 mins: Summer	Pipe	S80	S81	49.940	48.596	0.375	81.595	1.7	1.07	188.9	Surcharged
1.004	FEH: 100 years: +40 %: 15 mins: Summer	Pipe	S81	Attenuation Tank 2	49.940	48.596	0.375	80.116	2.4	0.87	185.7	Surcharged
1.006	FEH: 100 years: +40 %: 30 mins: Summer	Pipe	S82	S83	49.940	48.748	0.375	9.576	0.1	0.01	6.3	Surcharged
1.007	FEH: 100 years: +40 %: 600 mins: Winter	Pipe	S83	ExSWMH	49.940	49.591	0.035	175.571	1.2	0.25	3.0	Surcharged
2.001	FEH: 100 years: +40 %: 15 mins: Summer	Pipe	S54	S55	49.850	49.526	0.150	9.710	0.5	0.46	9.5	Surcharged
2.002	FEH: 100 years: +40 %: 60 mins: Summer	Pipe	S55	S56	49.850	49.678	0.150	24.628	1.0	0.28	6.7	Flood Risk

2.003	FEH: 100 years: +40 %: 30 mins: Winter	Pipe	S56	S57	49.850	49.584	0.225	12.927	0.4	0.16	6.9	Flood Risk
2.004	FEH: 100 years: +40 %: 15 mins: Summer	Pipe	S57	S58	49.825	49.491	0.225	11.834	0.3	0.47	12.8	Surch arged
2.000	FEH: 100 years: +40 %: 15 mins: Summer	Pipe	Car Park (1)	S54	49.801	49.537	0.150	7.265	0.8	0.26	8.4	Surch arged
3.000	FEH: 100 years: +40 %: 15 mins: Summer	Pipe	Car Park (2)	S54	49.801	49.530	0.150	4.282	0.5	0.27	7.4	Surch arged
4.000	FEH: 100 years: +40 %: 15 mins: Summer	Pipe	Car Park (3)	S57	49.801	49.491	0.150	3.461	0.6	0.23	7.9	Surch arged
5.000	FEH: 100 years: +40 %: 15 mins: Summer	Pipe	Car Park (4)	S57	49.801	49.474	0.150	0.401	0.2	0.08	3.2	Surch arged
6.000	FEH: 100 years: +40 %: 15 mins: Summer	Pipe	Car Park (5)	S57	49.801	49.503	0.150	7.936	1.2	0.22	9.9	Surch arged
7.000	FEH: 100 years: +40 %: 15 mins: Summer	Pipe	Car Park (6)	S57	49.801	49.489	0.150	0.760	0.3	0.12	5.3	Surch arged
8.001	FEH: 100 years: +40 %: 30 mins: Summer	Pipe	S59	S57	49.825	49.584	0.150	6.333	0.4	0.16	3.4	Flood Risk
8.000	FEH: 100 years: +40 %: 15 mins: Summer	Pipe	Car Park (7)	S59	49.801	49.511	0.150	5.652	0.7	0.21	6.1	Surch arged
9.000	FEH: 100 years: +40 %: 15 mins: Summer	Pipe	Car Park (8)	S57	49.801	49.498	0.150	6.155	0.9	0.22	9.1	Surch arged
10.000	FEH: 100 years: +40 %: 720 mins: Winter	Pipe	Car Park (9)	S58	49.802	49.795	0.100	1.061	0.1	0.06	0.9	Surch arged
2.005	FEH: 100 years: +40 %: 720 mins: Winter	Pipe	S58	S47	49.800	49.795	0.032	274.120	1.0	0.02	3.5	Flood Risk
2.006	FEH: 100 years: +40 %: 720 mins: Winter	Pipe	S47	S48	48.000	46.342	0.035	273.990	0.9	0.07	3.5	OK
2.007	FEH: 100 years: +40 %: 720 mins: Winter	Pipe	S48	S49	48.000	46.079	0.182	273.892	0.7	0.04	3.5	OK
2.008	FEH: 100 years: +40 %: 15 mins: Summer	Pipe	S49	S50	48.000	45.484	0.238	37.964	1.2	0.78	74.0	OK
2.009	FEH: 100 years: +40 %: 15 mins: Summer	Pipe	S50	S51	47.419	45.342	0.237	37.712	1.2	0.86	69.2	OK

2.012	FEH: 100 years: +40 %: 600 mins: Summer	Pipe	S52	ExSWMH (1)	46.200	45.564	0.044	213.818	0.9	0.18	4.0	Surcharged
12.000	FEH: 100 years: +40 %: 30 mins: Summer	Pipe	S92	S51	46.840	46.595	0.150	34.089	2.0	1.81	36.1	Flood Risk
Pipe	FEH: 100 years: +40 %: 30 mins: Summer	Pipe	S90	S91	48.100	46.984	0.150	11.673	0.9	0.42	13.3	Surcharged
Pipe (1)	FEH: 100 years: +40 %: 30 mins: Summer	Pipe	S91	S92	47.250	46.866	0.150	22.886	1.4	0.77	24.1	Surcharged

Tullys

Appendix B - Drawings

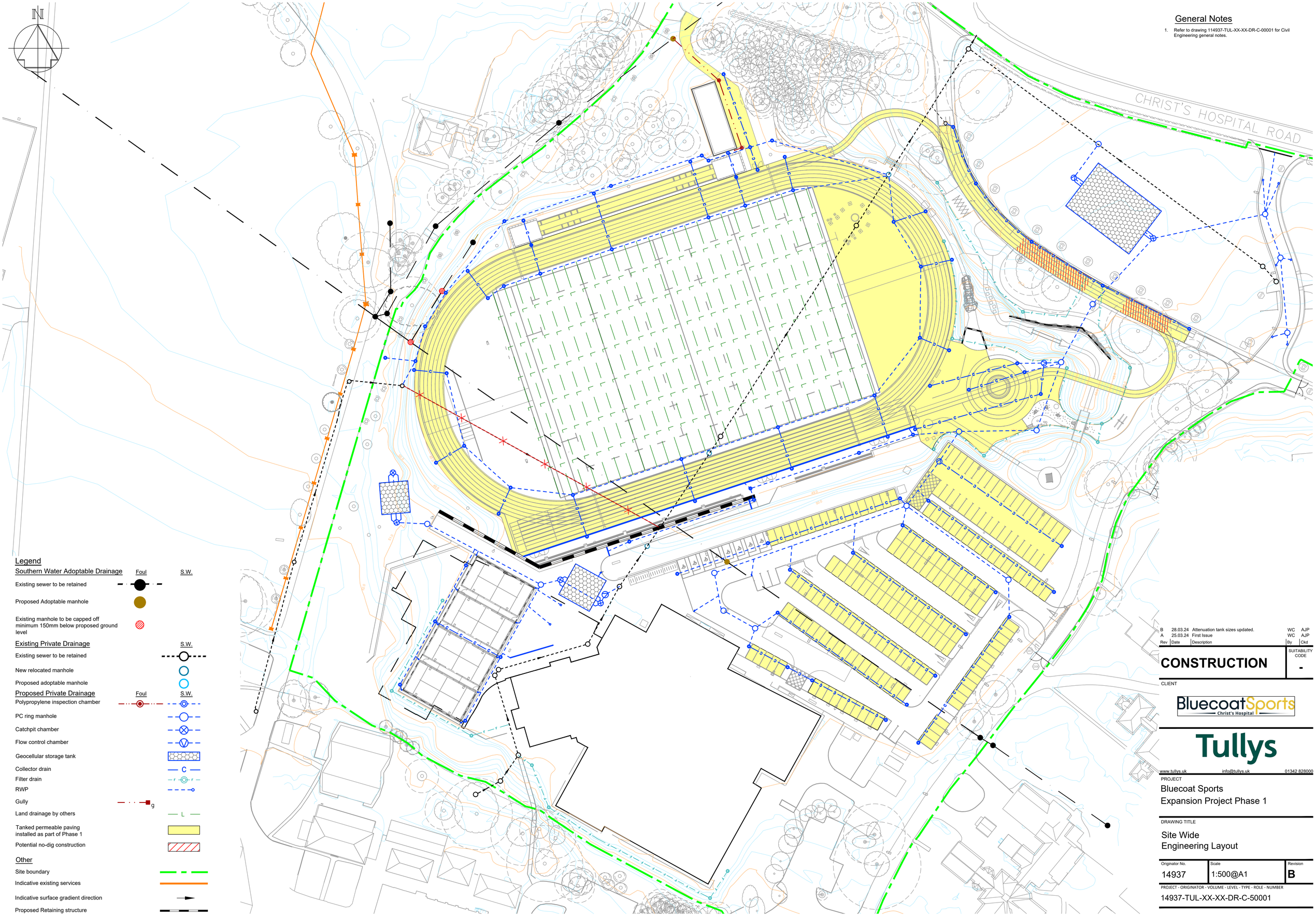

General Notes

1. Refer to drawing 114937-TUL-XX-XX-DR-C-00001 for Civil Engineering general notes.

Legend

Southern Water Adoptable Drainage — Foul / S.W.

- Existing sewer to be retained
- Proposed Adoptable manhole
- Existing manhole to be capped off minimum 150mm below proposed ground level

Existing Private Drainage — S.W.

- Existing sewer to be retained
- New relocated manhole
- Proposed adoptable manhole

Proposed Private Drainage — Foul / S.W.

- Polypropylene inspection chamber
- PC ring manhole
- Catchpit chamber
- Flow control chamber
- Geocellular storage tank
- Collector drain
- Filter drain
- RWP
- Gully
- Land drainage by others
- Tanked permeable paving installed as part of Phase 1
- Potential no-dig construction

Other

- Site boundary
- Indicative existing services
- Indicative surface gradient direction
- Proposed Retaining structure

Rev	Date	Description	By	Ckd
B	28.03.24	Attenuation tank sizes updated.	WC	AJP
A	25.03.24	First Issue	WC	AJP

CONSTRUCTION — SUITABILITY CODE: -

CLIENT

Bluecoat Sports Christ's Hospital

Tullys

www.tullys.uk info@tullys.uk 01342 828000

PROJECT

Bluecoat Sports
Expansion Project Phase 1

DRAWING TITLE

Site Wide
Engineering Layout

Originator No.	Scale	Revision
14937	1:500@A1	B

PROJECT - ORIGINATOR - VOLUME - LEVEL - TYPE - ROLE - NUMBER

14937-TUL-XX-XX-DR-C-50001

General Notes

1. Refer to drawing 14937-TDA-XX-XX-DR-C-0001 for Civil Engineering General Notes

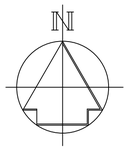

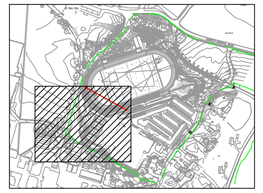

Key Plan

Attenuation Tank 1
Size 9x10x1.2m deep
GL 51.200 to 50.200
TL 49.600
BL 48.400

Existing 300Ø surface water drain to be abandoned.

Existing private surface water manhole to be relocated clear of gabion wall

Indicative future extension building outline

Attenuation Tank 2
Size 11x11x1.2m deep
GL 49.940 to 50.000
TL 49.000
BL 47.800

Flow Control Restricted to 3.0l/s

Ex SWMH
CL 50.23
IL 47.00

Legend

Southern Water Adoptable Drainage

	Foul	S.W.
Existing sewer to be retained		
Proposed Adoptable manhole		
Existing manhole to be capped off minimum 150mm below proposed ground level		

Existing Private Drainage

	S.W.
Existing sewer to be retained	
New relocated manhole	

Proposed Private Drainage

	Foul	S.W.
Polypropylene inspection chamber		
PC ring manhole		
Catchpit chamber		
Flow control chamber		
Geocellular storage tank		
Collector drain		C
Filter drain		f
RWP		
Gully	g	
Land drainage by others		L
Permeable paving installed as part of Phase 1		

Other

- Site boundary
- Indicative existing services
- Indicative surface gradient direction
- Proposed retaining structure

Rev	Date	Description	By	Ckd
B	28.03.24	Attenuation tank sizes updated.	WC	AJP
A	25.03.24	Construction Issue	WC	AJP

CONSTRUCTION — SUITABILITY CODE: -

CLIENT

Bluecoat Sports Christ's Hospital

Tullys

www.tullys.uk info@tullys.uk 01342 828000

PROJECT

Bluecoat Sports
Expansion Project Phase 1

DRAWING TITLE

Padel Courts
Engineering Layout

Originator No.	Scale	Revision
14937	1:250@A1	B

PROJECT - ORIGINATOR - VOLUME - LEVEL - TYPE - ROLE - NUMBER

14937-TUL-XX-XX-DR-C-50004

General Notes

1. Refer to drawing 14937-TDA-XX-XX-DR-C-0001 for Civil Engineering General Notes

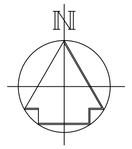



Key Plan

Existing private surface water manhole to be relocated clear of pitch

Existing private surface water manhole to be relocated clear of gabion wall

Ex SWMH
CL 50.23
IL 47.00

Flow Control
Restricted to
3.0l/s

Flow Control
Restricted to
2.0l/s

Flow Control
Restricted to
3.5l/s

S115 serves the lowest inner circle area of the running bowl

Note
Embankments steeper than 1 in 3 will require an engineered solution (eg geogrid stabilisation).
To specialist design and details.

Legend

Southern Water Adoptable Drainage — Foul / S.W.

- Existing sewer to be retained
- Proposed Adoptable manhole
- Existing manhole to be capped off minimum 150mm below proposed ground level

Existing Private Drainage — S.W.

- Existing sewer to be retained
- New relocated manhole

Proposed Private Drainage — Foul / S.W.

- Polypropylene inspection chamber
- PC ring manhole
- Catchpit chamber
- Flow control chamber
- Geocellular storage tank
- Collector drain (C)
- Filter drain (F)
- RWP
- Gully (g)
- Land drainage by others (L)
- Tanked permeable paving installed as part of Phase 1
- Potential no-dig construction

Other

- Site boundary
- Indicative existing services
- Indicative surface gradient direction
- Proposed Retaining structure

Rev	Date	Description	By	Ckd
B	28.03.24	S58 Flow control rate reduced.	WC	AJP
A	25.03.24	Construction Issue	WC	AJP

CONSTRUCTION — SUITABILITY CODE: -

CLIENT

Bluecoat Sports — Christ's Hospital

Tullys

www.tullys.uk info@tullys.uk 01342 828000

PROJECT

Bluecoat Sports
Expansion Project Phase 1

DRAWING TITLE

Car Park
Engineering Layout

Originator No.	Scale	Revision
14937	1:250@A1	B

PROJECT - ORIGINATOR - VOLUME - LEVEL - TYPE - ROLE - NUMBER

14937-TUL-XX-XX-DR-C-50005

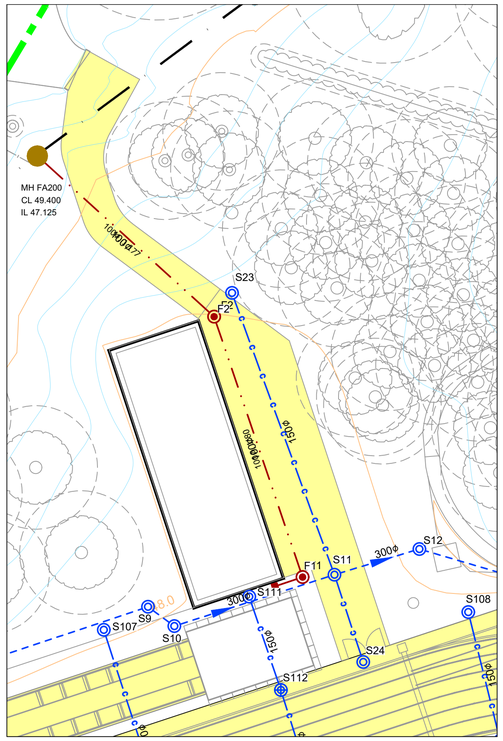

Athletics Store Plan

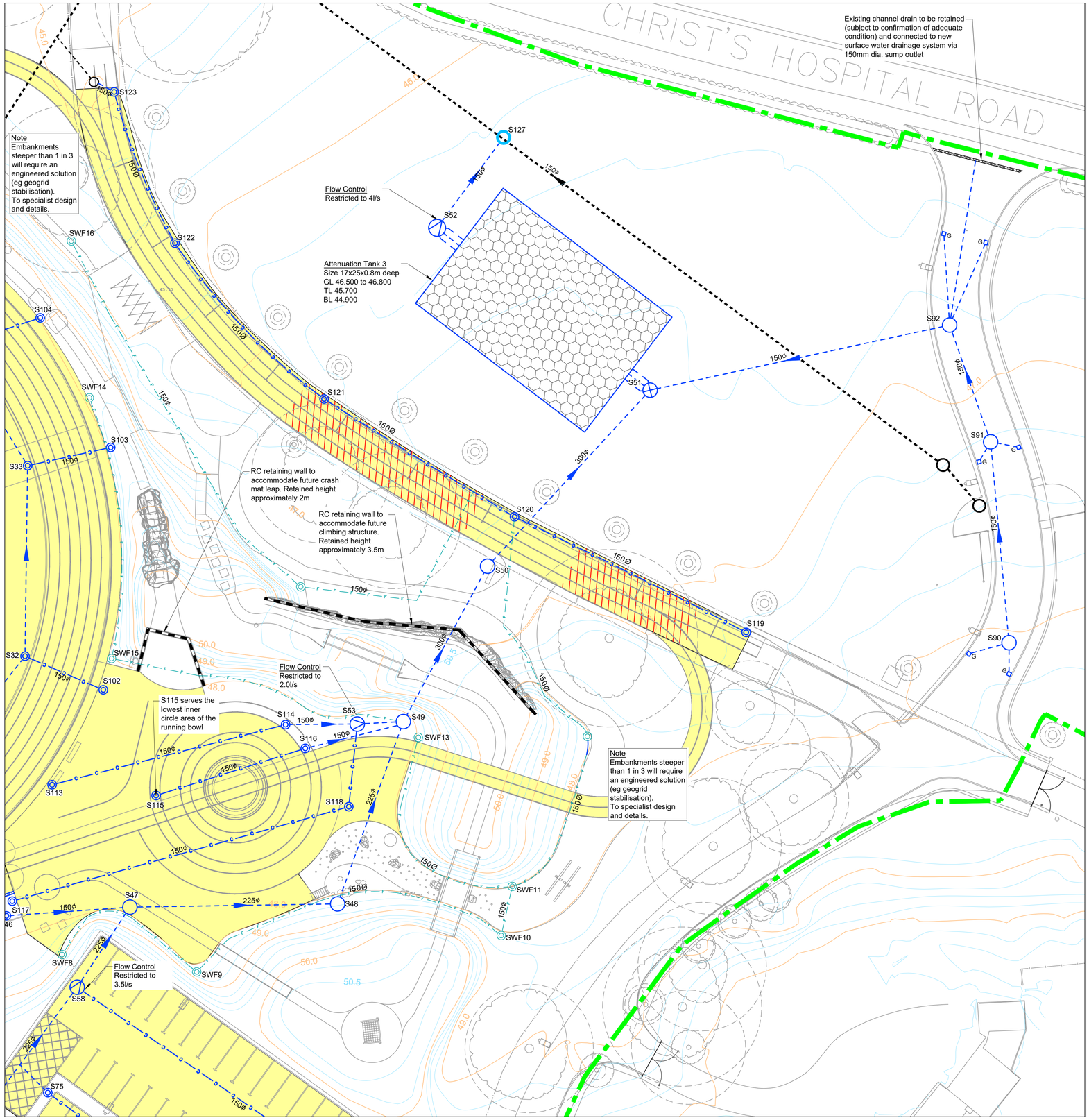

General Notes

1. Refer to drawing 14937-TDA-XX-XX-DR-C-0001 for Civil Engineering General Notes

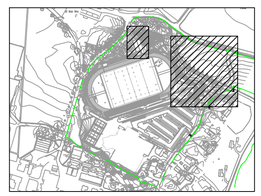

Key Plan

Legend

Southern Water Adoptable Drainage — Foul / S.W.

- Existing sewer to be retained
- Proposed Adoptable manhole
- Existing manhole to be capped off minimum 150mm below proposed ground level

Existing Private Drainage — S.W.

- Existing sewer to be retained
- New relocated manhole
- Proposed adoptable manhole

Proposed Private Drainage — Foul / S.W.

- Polypropylene inspection chamber
- PC ring manhole
- Catchpit chamber
- Flow control chamber
- Geocellular storage tank
- Collector drain (C)
- Filter drain (F)
- RWP
- Gully (g)
- Land drainage by others (L)
- Tanked permeable paving installed as part of Phase 1
- Potential no-dig construction

Other

- Site boundary
- Indicative existing services
- Indicative surface gradient direction
- Proposed Retaining structure

Rev	Date	Description	By	Ckd
B	28.03.24	S58 Flow control rate reduced & attenuation tank size updated.	WC	AJP
A	25.03.24	Construction Issue	WC	AJP

CONSTRUCTION — SUITABILITY CODE: -

CLIENT

Bluecoat Sports — Christ's Hospital

Tullys

www.tullys.uk info@tullys.uk 01342 828000

PROJECT

Bluecoat Sports
Expansion Project Phase 1

DRAWING TITLE

Athletics Store, Adventure Trail and Access Road
Engineering Layout

Originator No.	Scale	Revision
14937	1:250@A1	B

PROJECT - ORIGINATOR - VOLUME - LEVEL - TYPE - ROLE - NUMBER

14937-TUL-XX-XX-DR-C-50006

Surface Water Manhole Schedule - Private

Reference	CL (m)	IL (m)	Depth (m)	Internal Dimensions (mm)	Opening Size (mm)	Loading Class	Comments
S4	48.065	47.200	0.865	600	600Ø	B125	PPIC
S5	48.065	47.100	0.965	600	600Ø	B125	PPIC
S6	48.065	47.000	1.065	600	600Ø	B125	PPIC
S7	48.100	46.750	1.350	600	600Ø (Restrictor 300x300 or 350Ø)	B125	DNIC
S8	48.100	46.500	1.600	600	600Ø (Restrictor 300x300 or 350Ø)	B125	DNIC
S9	48.100	46.250	1.850	600	600Ø (Restrictor 300x300 or 350Ø)	B125	DNIC
S10	48.065	46.200	1.865	600	600Ø (Restrictor 300x300 or 350Ø)	B125	DNIC
S11	48.065	46.100	1.965	600	600Ø (Restrictor 300x300 or 350Ø)	B125	DNIC
S12	48.000	46.050	1.950	600	600Ø (Restrictor 300x300 or 350Ø)	B125	DNIC
S23	48.065	47.400	0.665	450	450Ø	B125	PPIC
S24	48.065	47.400	0.665	450	450Ø	B125	PPIC
S25	48.000	47.150	0.850	450	450Ø	B125	PPIC
S26	48.000	46.925	1.075	450	450Ø	B125	PPIC
S27	48.000	46.675	1.325	600	600Ø (Restrictor 300x300 or 350Ø)	B125	DNIC
S28	48.000	46.540	1.460	600	600Ø (Restrictor 300x300 or 350Ø)	B125	DNIC
S29	48.000	46.300	1.700	600	600Ø (Restrictor 300x300 or 350Ø)	B125	DNIC
S30	48.000	46.075	1.925	600	600Ø (Restrictor 300x300 or 350Ø)	B125	DNIC
S31	48.000	45.775	2.225	600	600Ø (Restrictor 300x300 or 350Ø)	B125	DNIC
S32	48.000	45.625	2.375	600	600Ø (Restrictor 300x300 or 350Ø)	B125	DNIC
S33	48.000	45.475	2.525	600	600Ø (Restrictor 300x300 or 350Ø)	B125	DNIC
S34	48.000	45.350	2.650	600	600Ø (Restrictor 300x300 or 350Ø)	B125	DNIC
S35	48.000	47.150	0.850	450	450Ø	B125	PPIC
S36	48.000	47.050	0.950	450	450Ø	B125	PPIC
S37	48.000	46.775	1.225	600	600Ø	B125	PPIC
S38	48.000	46.625	1.375	600	600Ø (Restrictor 300x300 or 350Ø)	B125	DNIC
S39	48.000	46.425	1.575	600	600Ø (Restrictor 300x300 or 350Ø)	B125	DNIC
S40	48.000	46.350	1.650	600	600Ø (Restrictor 300x300 or 350Ø)	B125	DNIC
S41	48.000	46.175	1.825	600	600Ø (Restrictor 300x300 or 350Ø)	B125	DNIC
S42	49.850	49.250	0.650	450	450Ø	B125	PPIC
S43	48.000	47.200	0.800	450	450Ø	B125	PPIC
S44	48.000	47.100	0.900	450	450Ø	B125	PPIC
S45	48.000	46.750	1.250	450	450Ø (Restrictor 300x300 or 350Ø)	B125	DNIC
S46	48.000	46.500	1.500	450	450Ø (Restrictor 300x300 or 350Ø)	B125	DNIC
S47	48.000	46.300	1.700	1200	450Ø (Restrictor 300x300 or 350Ø)	B125	DNIC
S48	48.000	46.050	1.950	1200	600x600	B125	PC RING
S49	48.000	45.250	2.750	1200	600x600	B125	PC RING
S50	46.800	45.100	1.700	1200	600x600	B125	PC RING
S51	46.800	44.950	2.300	1200	600x600	B125	PC RING CATCHPIT
S52	46.500	44.850	2.100	1200	675x1200	B125	PC RING FLOW CONTROL
S53	48.000	46.400	2.050	1200	1200x675	B125	PC RING FLOW CONTROL
S54	49.850	48.550	1.300	1200	600x600	B125	PC RING
S55	49.850	48.400	1.450	1200	600x600	D400	PC RING
S56	49.850	48.175	1.675	1200	600x600	D400	PC RING
S57	49.825	47.750	2.075	1200	600x600	D400	PC RING
S58	49.800	47.700	2.625	1200	600x600	D400	PC RING FLOW CONTROL
S59	49.825	48.295	1.530	1200	600x600	D400	PC RING
S60	49.900	49.000	0.900	450	450Ø	B125	PPIC
S61	49.900	48.600	1.300	450	450Ø (Restrictor 300x300 or 350Ø)	B125	DNIC
S62	49.900	49.000	0.900	450	450Ø	B125	PPIC
S63	49.900	48.600	1.300	450	450Ø (Restrictor 300x300 or 350Ø)	B125	DNIC
S64	49.900	49.000	0.900	450	450Ø	B125	PPIC
S65	49.900	48.300	1.600	450	450Ø (Restrictor 300x300 or 350Ø)	B125	DNIC
S66	49.900	49.000	0.900	450	450Ø	B125	PPIC
S67	49.900	48.600	1.300	450	450Ø (Restrictor 300x300 or 350Ø)	B125	DNIC
S68	49.900	49.000	0.900	450	450Ø	B125	PPIC
S69	49.900	48.600	1.300	450	450Ø (Restrictor 300x300 or 350Ø)	B125	DNIC
S70	49.900	49.000	0.900	450	450Ø	B125	PPIC
S71	49.900	48.250	1.650	450	450Ø (Restrictor 300x300 or 350Ø)	B125	DNIC
S72	49.900	49.000	0.900	450	450Ø	B125	PPIC
S73	49.900	48.445	1.455	450	450Ø (Restrictor 300x300 or 350Ø)	B125	DNIC

Surface Water Manhole Schedule - Private

Reference	CL (m)	IL (m)	Depth (m)	Internal Dimensions (mm)	Opening Size (mm)	Loading Class	Comments
S74	49.900	49.000	0.900	450	450Ø	B125	PPIC
S75	49.900	48.600	1.300	450	450Ø (Restrictor 300x300 or 350Ø)	B125	DNIC
S76	49.700	49.000	0.700	450	450Ø	B125	PPIC
S77	51.200	48.450	3.200	1200	600x600	B125	PC RING CATCHPIT
S78	51.200	48.350	3.300	1200	600x600	B125	PC RING CATCHPIT
S79	50.000	48.300	1.700	1200	600x600	B125	PC RING
S80	49.940	47.900	2.040	1200	600x600	B125	PC RING
S81	49.940	47.850	2.540	1200	600x600	B125	PC RING CATCHPIT
S82	49.940	47.750	2.640	1200	600x600	B125	PC RING CATCHPIT
S83	49.940	47.200	3.190	1500	1200x675	B125	PC RING FLOW CONTROL
S84	49.940	49.200	0.740	450	450Ø	B125	PPIC
S85	50.230	48.915	1.315	450	450Ø	B125	PPIC
S86	49.940	48.650	1.290	450	450Ø (Restrictor 300x300 or 350Ø)	B125	DNIC
S87	49.940	49.200	0.740	450	450Ø	B125	PPIC
S88	49.940	48.915	1.025	450	450Ø	B125	PPIC
S90	48.100	46.600	1.500	1200	600x600	D400	PC RING
S91	47.250	45.850	1.400	1200	600x600	D400	PC RING
S92	46.840	45.400	1.440	1200	600x600	D400	PC RING
S94	51.000	48.000	3.000	450	450Ø (Restrictor 300x300 or 350Ø)	B125	DNIC
S95	48.065	47.250	0.815	450	450Ø	B125	PPIC
S96	48.065	47.250	0.815	450	450Ø	B125	PPIC
S97	48.065	47.250	0.815	450	450Ø	B125	PPIC
S98	48.900	47.250	1.650	450	450Ø	B125	PPIC
S99	48.000	47.250	0.750	450	450Ø	B125	PPIC
S100	48.000	47.250	0.750	450	450Ø	B125	PPIC
S101	48.000	47.250	0.750	450	450Ø	B125	PPIC
S102	48.065	47.250	0.815	450	450Ø	B125	PPIC
S103	48.065	47.000	1.065	450	450Ø	B125	PPIC
S104	48.065	47.250	0.815	450	450Ø	B125	PPIC
S105	48.065	47.250	0.815	450	450Ø	B125	PPIC
S106	48.065	47.250	0.815	450	450Ø	B125	PPIC
S107	48.065	47.250	0.815	450	450Ø	B125	PPIC
S108	48.065	47.250	0.815	450	450Ø	B125	PPIC
S109	48.065	47.000	1.065	450	450Ø	B125	PPIC
S110	48.065	46.950	1.565	450	450Ø (Restrictor 300x300 or 350Ø)	B125	DNIC CATCHPIT
S111	48.065	47.000	1.065	450	450Ø	B125	PPIC
S112	48.065	46.950	1.565	450	450Ø (Restrictor 300x300 or 350Ø)	B125	DNIC CATCHPIT
S113	48.065	46.850	1.215	450	450Ø	B125	PPIC
S114	47.800	46.500	1.300	450	600x600	B125	DNIC
S115	47.800	45.850	1.950	450	450Ø (Restrictor 300x300 or 350Ø)	B125	DNIC
S116	47.800	45.650	2.150	450	450Ø (Restrictor 300x300 or 350Ø)	B125	DNIC
S117	48.000	47.050	0.950	450	450Ø	B125	PPIC
S118	48.000	46.525	1.475	450	450Ø (Restrictor 300x300 or 350Ø)	B125	DNIC
S119	47.250	46.500	0.750	450	450Ø	B125	PPIC
S120	46.750	46.000	0.750	450	450Ø	B125	PPIC
S121	46.300	45.550	0.750	450	450Ø	B125	PPIC
S122	45.650	44.900	0.750	450	450Ø	B125	PPIC
S123	45.000	44.250	0.750	450	450Ø	B125	PPIC
S124	50.000	48.700	1.300	450	450x450 (Restrictor 300x300 or 350Ø)	B125	DNIC
S125	49.900	48.780	1.120	450	450Ø	B125	PPIC
S126	49.900	48.715	1.185	450	450Ø	B125	PPIC
S127	46.739	44.650	2.089	1200	600x600	B125	PC RING

Surface Water Manhole Schedule - Private Filter/Land Drainage

Reference	CL (m)	IL (m)	Depth (m)	Internal Dimensions (mm)	Opening Size (mm)	Loading Class	Comments
SWF1	50.100	49.500	0.600	450	450Ø	B125	PPIC
SWF2	50.500	49.430	1.070	450	450Ø	B125	PPIC
SWF3	50.500	49.040	1.460	450	450x450 (Restrictor 300x300 or 350Ø)	B125	DNIC
SWF4	50.100	48.940	1.160	450	450Ø	B125	PPIC
SWF5	50.250	49.220	1.030	450	450Ø	B125	PPIC
SWF6	50.250	49.405	0.845	450	450Ø	B125	PPIC
SWF7	50.185	49.630	0.555	450	450Ø	B125	PPIC
SWF8	48.000	47.400	0.600	450	450Ø	B125	PPIC
SWF9	48.000	47.250	0.750	450	450Ø	B125	PPIC
SWF10	48.000	46.975	1.025	450	450Ø	B125	PPIC
SWF11	48.000	46.925	1.075	450	450Ø	B125	PPIC
SWF12	48.000	46.825	1.175	450	450Ø	B125	PPIC
SWF13	48.000	47.200	0.800	450	450Ø	B125	PPIC
SWF14	48.000	47.400	0.600	450	450Ø	B125	PPIC
SWF15	48.000	47.200	0.800	450	450Ø (Restrictor 300x300 or 350Ø)	B125	PPIC
SWF16	46.000	45.550	0.450	450	450Ø	B125	PPIC
SWF17	47.000	45.320	1.680	450	450Ø (Restrictor 300x300 or 350Ø)	B125	DNIC

Foul Water Manhole Schedule - Private

Reference	CL (m)	IL (m)	Depth (m)	Internal Dimensions (mm)	Opening Size (mm)	Loading Class	Comments
F1	48.076	47.565	0.511	450	450Ø	B125	PPIC
F2	48.065	47.285	0.780	450	450Ø	B125	PPIC

Note: Pipes entering/leaving inspection chambers shall have common soffit levels unless otherwise stated.

PC RING - Pre-cast Concrete Ring
PPIC - Polypropelene Inspection Chamber
DNIC - Deep Non Entry Inspection Chamber
CATCHPIT - to have min 450mm sump below quoted IL. Note that this is reflected in the quoted chamber depth
FLOW CONTROL - to have min 450mm sump below quoted IL. Note that this is reflected in the quoted chamber depth

General Notes

1. Refer to drawing 14937-TUL-XX-XX-DR-C-00001 for Civil Engineering general notes.

Rev	Date	Description	By	Ckd
A	25.03.24	Construction Issue	WC	AJP

SUITABILITY CODE

CONSTRUCTION

CLIENT

Bluecoat Sports
Christ's Hospital

Tullys

www.tullys.uk info@tullys.uk 01342 828000

PROJECT

Bluecoat Sports
Expansion Project Phase 1

DRAWING TITLE

Manhole Schedules

Originator No.	Scale	Revision
14937	NTS	A

PROJECT - ORIGINATOR - VOLUME - LEVEL - TYPE - ROLE - NUMBER

14937-TUL-XX-XX-SH-C-67001