Proposed External Hanging Signage Detail

Drawing number: HorshamSS-0147-DE-HS-PR

Hanging Sign - Panel A

Aluminium construction (powder coated red RAL3020)
with acrylic logo

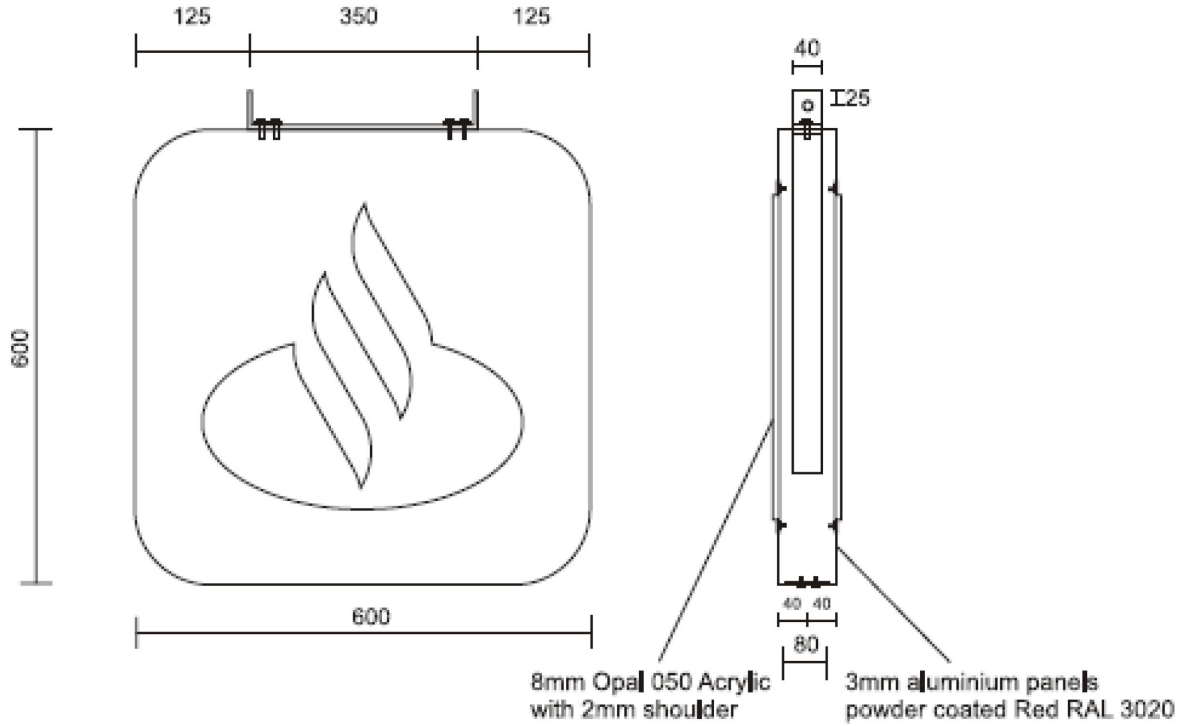



0 10 20 30 40 50 100
Centimetres Scale 1:10 @ A4

CONFIDENTIAL: Any reproduction, disclosure, copying, transmission and communications of this document is prohibited