ALLARBORICULTURE
23 Southernhay Avenue, Bristol, BS8 4TJ
07375110399 I 0800 107 3652
e – info@allarboriculture.co.uk

ARBORICULTURAL IMPACT ASSESSMENT AND METHOD STATEMENT

BS5837:2012

On behalf of:
Vivid Green

Site address:
Lion Lodge,
Bashurst Hill,
Horsham,
RH13 0PB

Prepared by:
Kristian Chesterman BSc (Hons)

Report reference:
AAAIALION

Report date:
23rd June 2025

ALLARBORICULTURE

Contents

Chapters	Content	Page no.
1.0	Instruction	3
2.0	Statement Of Purpose	3
3.0	Associated Documents	3
4.0	Site Description	3
5.0	Vegetation Description	3
6.0	Arboricultural Impact Assessment	4
7.0	Method Statement	5

Appendix 1	Tree Survey Schedule
Appendix 2	Protection
Appendix 3	Tree Protection Plan

1.0 Instruction

All Arboriculture has been instructed by Vivid Green to undertake a tree survey in accordance with BS5837:2012 *Trees In relation to design, demolition and construction – Recommendations*, and to produce an Arboricultural Impact Assessment, Arboricultural Method Statement and Tree Protection Plan. The instruction was received on the 5th June 2025. The tree survey was carried out on the 11th June 2025.

2.0 Statement of purpose

The purpose of this report is to provide local planning authorities with sufficient arboricultural information to consider the effect of the proposed development on nearby trees, and to demonstrate that trees have been carefully considered throughout the development process.
The report includes an arboricultural method statement that describes how work will be undertaken to provide adequate protection of retained trees.

3.0 Associated documents and drawings

This report should be read in conjunction with the following documents and drawings:

1. 22505-03 WiP 1
2. British Standards Institute - BS5837:2012 Trees in relation to design, demolition and construction – Recommendations
3. Tree Protection Plan – AATPPLION

4.0 Site description

The site is in the rural area of Bashurst Hill, Horsham and is a detached residential dwelling with gardens. The proposal is erection of a detached outbuilding following demolition of existing storage building. The site falls under the jurisdiction of Horsham District Council.

5.0 Vegetation description

The vegetation consists of 4 Category B trees and 3 Category C trees and 1 Category C group.
A search on the councils website shows the site is not within a Conservation Area and there are no trees subject to a Tree Preservation Order.
Some tree protection measures and working methodology (in accordance with BS 5837:2012) will ensure they are not detrimentally affected during construction.

6.0 Arboricultural impact assessment

Table 1: Summary of impacts	
Tree removal	T4, T5
Facilitation pruning	G1
Demolition within RPA	T2, T3
New surfacing within RPA	None
New structures within RPA	T2, T3

Building construction in relation to tree roots: The removal of Category C trees T4 and T5 are required for the implementation of the proposed development.

Following demolition of the existing outbuilding, the existing concrete slab will remain in place and be utilised for the proposed the will not have an impact on retained trees.

Building construction in relation to tree crowns: The facilitation pruning of G1 is required to facilitate the development. G1 has low branches that overhang the site and are very close to the roof of the existing. The low branches are also potentially vulnerable to damage during construction. To reduce the risk of accidental damage, the lateral branches on the vulnerable side of the crowns will be crown lifted to 4m by tip reducing low, hanging branches. The health and appearance of the tree will not be affected.

Tree root and canopy protection: The RPA (Root protection area) of the retained trees should be protected during the development phase with heras fencing and/or ground protection to ensure heavy machinery is not operated, or materials stored within the rooting area. This can be detrimental to the trees, causing soil compaction and root die back. The protection of the RPA and canopy spread is detailed in the Arboricultual Method Statement below.

Materials delivery, storage and handling: Materials should not be handled or stored within the RPA's of retained trees; the load exerted can result in soil compaction and leachate from spills can be toxic to trees.

Surface drains, soakaways and services: It is important that services, surface drains and soak aways avoid the RPA's of retained trees as roots can be damaged during trench excavations.

7.0 Arboricultural method statement

ALLARBORICULTURE

Implementation and phasing of the proposed development: Prior to any building work commencing on site, a meeting will be held with the tree consultant and site manager present. During the meeting details regarding the location of tree protection will be discussed and a time to reconvene in order to assess the tree protection will be agreed.

Protective measures must be in place prior to any demolition works taking place.

Tree protection barriers: Protective fencing must be installed prior to the commencement of any development activity and will be retained in the positions shown on the tree protection plan (AATPPLION). The fencing will be to the BS 5837:2012 'Trees in relation to design, demolition and construction – recommendations' (section 6.2) i.e. preformed galvanised steel mesh panels ('Heras' or similar) facings on a driven braced scaffold pole framework. It will be retained at the locations shown until construction is completed. It may be moved or removed only with notice to and consent from the local planning authority.

Ground protection: Temporary ground protection to be installed within RPA of G1, T2, T3 and T8 should be capable of supporting pedestrian movements only, a single thickness of scaffold boards placed either on top of a driven scaffold frame, so as to form a suspended walkway, or on top of a compression-resistant layer (e.g. 100 mm depth of woodchip), laid onto a geotextile membrane.

Storage and handling of materials: This site has sufficient space for materials to be stored and handled and must be outside of the RPA's of retained trees.

Contractors parking: There is sufficient space on onsite for parking.

Welfare facilities: Toilets and hand washing facilities shall be made available within the property and there is space for temporary facilities.

Surface drains, soakaways and services: No details of new service runs have been provided at this stage. They should be routed to avoid the RPA's of retained trees. If this is not possible, special techniques must be employed to place the services within the RPA of the trees. The British Standard suggests a range of trench less methods suitable for various applications including micro tunnelling, surface launched directional drilling, Pipe ramming and Impact Moleing/thrust boring. It is important common ducts should be used where it is not possible to avoid the RPA. Further guidance on installing underground services adjacent to trees can be found in the NJUG Guidelines for the Planning, Installation and Maintenance of Utility Apparatus in Proximity to Trees (Volume 4 Issue 2). This document outlines a number of techniques that may be used for trenching near trees, including trenchless techniques, discontinuous trenching and hand digging.

Supervision: The project arboriculturalist will attend the site to inspect the tree protection and ensure that it has been laid out as prescribed in the method statement and meets the requirements of BS5837:12. It is the responsibility of the site manager to inform the arboricultural consultant when inspections are required for example, when protection is ready to be inspected.

Tree works: The removal of Category C trees T4 and T5 are required for the implementation of the proposed development. The facilitation pruning of G1 will also be required. G1 will be crown lifted to 4m by tip reducing low, hanging branches. The health and appearance of the tree will not be affected.
All tree work shall be carried out in accordance with BS 3998:2010 Tree Work – Recommendations by suitably qualified personnel.

Sequencing of works

1. Tree works
2. Installation of tree protection as shown on the TPP.
3. Arboricultural consultant to check tree protection at this stage.
4. Demolition and main construction phase
5. Remove tree protection when all construction activity has ended.
6. Carry out landscaping works (**if required**).
7. Completion

Contacts

Architect and Agent:
Name:
Tel:
E:

Arboricultural Consultant:
Name: K Chesterman
Tel: 07375110399
E: info@allarboriculture.co.uk

Critical phases of pre-commencement, induction, construction & completion

REFERENCE	ACTIVITY	ONE OFF OR REPEAT	ATTENDEES	ACTION
1	Pre-commencement meeting (to discuss working methods, timescales and tree protection schemes)	One off	Developer, Arboricultural Consultant, Site Manager/Agent, Ground Works Contractor	Arboricultural Consultant to record minutes – copies to be submitted to attendees
2	Inspection of tree protection	Repeat until works completion	Arboricultural Consultant, Site Manager/Agent	Arboricultural Consultant to record minutes – copies to be submitted to Developer and Council Arboricultural Officer within 5 days
3	Demolition and construction	Repeat until works completion	Arboricultural Consultant, Site Manager/Agent	Arboricultural Consultant to record minutes – copies to be submitted to Developer and Council Arboricultural Officer within 5 days
4	Installation of hard surfaces, landscaping, **if required**	Repeat until works completion	Arboricultural Consultant, Site Manager/Agent	Arboricultural Consultant to record minutes – copies to be submitted to Developer and Council Arboricultural Officer within 5 days
5	Final assessment – after tree protection removal	One off	Developer, Arboricultural Consultant, Site Manager/Agent, Ground Works Contractor	Arboricultural Consultant to record minutes – copies to be submitted to Developer and Council Arboricultural Officer within 5 days
6	Additional inspections (if necessary) to ensure periods not greater than three months elapse between any of above listed monitoring events	Dependent on progress of the project	Arboricultural Consultant, Site Manager/Agent	Arboricultural Consultant to record minutes – copies to be submitted to Developer and Council Arboricultural Officer within 5 days

Variations and Incidents

Any proposed variations to the proposed working method (relating to arboricultural matters) will be referred by the on Site Manger/Agent to the Developer who will seek advice from the Arboricultural Consultant. The Arboricultural Consultant shall advise on minor amendments and will subsequently report these to the Arboricultural Officer by e-mail or minutes. Issues directly relating to tree surgery or tree retention will be forwarded by the Arboricultural Consultant (with recommendations) to the Arboricultural Officer for approval. Except in an emergency situation and when the Arboricultural Officer is unavailable, no such actions will occur without the written approval of the Arboricultural Officer.

APPENDIX 1 - Tree Schedule Schedule

ALLARBORICULTURE

Tree No	Species	Height (m)	Trunk Diameter (cm)	Crown spread (m)		Crown height above ground (m)	Life stage	General observations	BS 5837 cat	Root protection area (m)
G1	Field Maple *Acer campestre*	6-7	20	3 3	3 3	2	Early Mature	Off site linear group. Slightly suppressed.	C	2.4
2	Oak *Quercus robur*	15	64	6 6	6 6	5	Early Mature	Off site tree. Deadwood present.	B	7.6
3	Oak *Quercus robur*	20	72	8 8	8 8	5	Early Mature	Off site tree. Deadwood present.	B	8.6
4	Hawthorn *Crataegus monogyna*	4	22	2 2	1 2	<1	Early Mature	Suppressed. Poor form.	C	2.6
5	Field Maple *Acer campestre*	3	23	1 1	1 1	<1	Early Mature	Suppressed. Lean to the South. Poor form.	C	2.7
6	Hawthorn *Crataegus monogyna*	4	19	2 2	2 2	1	Early Mature	Lean to the South. Suppressed.	C	2.2
7	Oak *Quercus robur*	15	65	4 5	4 4	4	Early Mature	Co doiminant.	B	7.8
8	Oak *Quercus robur*	15	50	4 4	4 4	4	Early Mature	Inspection restricted.	B	6.0

APPENDIX 1 - Tree Schedule Schedule

Survey Key

Diameter (mm)

Stem diameter in millimetres measured at 1.5m above ground level. Where the stem is divided below 1.5m, measurement is taken as directed by BS:5837 Annex

C. RPA - Root Protection Area

RPA circle radius is determined from Annex D of BS:5837. R- Radius

A – Area

Branch Spread (m)

Radial crown spread in metres, measured for each of the four cardinal points of the compass from the centre of the trunk. Low branches

N E
W S

Height above ground in metres of the lowest branch and use of the 4 cardinal points of the compass.

Age class

(NP) Newly planted – a tree within 3 years after planting

(Y) Young – a tree within its first one third of life expectancy

(EM) Early Mature – a tree within its second third of life expectancy

(M) Mature – a tree in its final one third of life expectancy

(OM) Over Mature – a tree having reached its maximum life span and is declining in health and size due to old age

(V) Veteran – a tree in the second or mature stage of its life and has important wildlife and habitat features including; hollowing or associated decay fungi, holes, wounds and large dead branches.

(A) Ancient – a tree in the ancient or third and final stage of their life that is of interest biologically, aesthetically or culturally because of its age, size and condition

Physiological Condition

GOOD – a tree in a healthy condition with no significant problems

FAIR – a tree generally in good health with some problems that can be remediated POOR – a tree in poor health with significant problems that can't be remediated DEAD – a tree without sufficient live material to sustain life

Structural Condition

An assessment of the structural/safe condition of the tree categorised into:

GOOD – a tree in a safe condition with no significant defects

FAIR – a tree in a safe condition at present but with defects or with significant defects that can be remediated POOR – a tree with significant defects that can't be remediated.

EC - Estimated remaining contribution in years (based on the species and its current condition)

<10 Up to 10 years

10+ 10 years or more

20+ 20 years or more

40+ 40 years or more

Category (Tree quality assessment)

Category U – Tree in poor condition that cannot realistically be retained for longer

than 10 years Category A – Trees of high quality

Category B – Trees of moderate quality Category

C – Trees of low quality

APPENDIX 2 – Protective fencing

Protective fencing should be erected before any construction commences on site. It shouldalso be in position to protect important trees prior to demolition.

Protective fencing should stay in position until all construction activity has finished.

'Fencing should be established at the minimum distance set out in British Standard 5837:2012 '*Trees in relation to design, demolition and construction - Recommendations*'. Excavations should not encroach into the fence position and it is appropriate to keep atleast 0.5m between the fence and any changes in level.

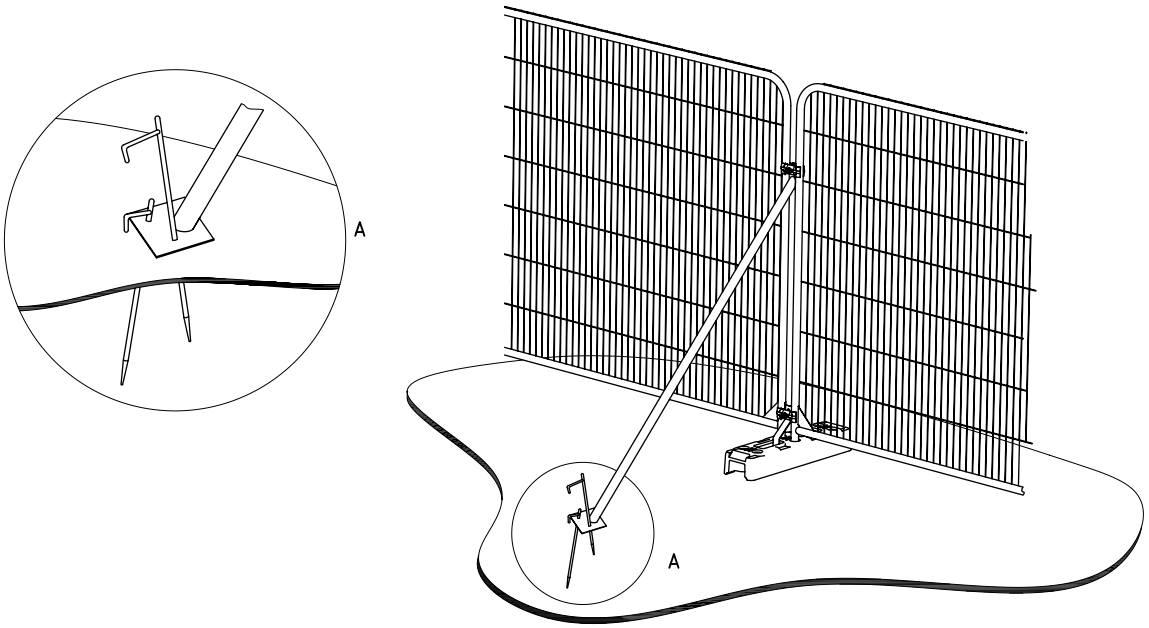

a) Stabilizer strut with base plate secured with ground pins

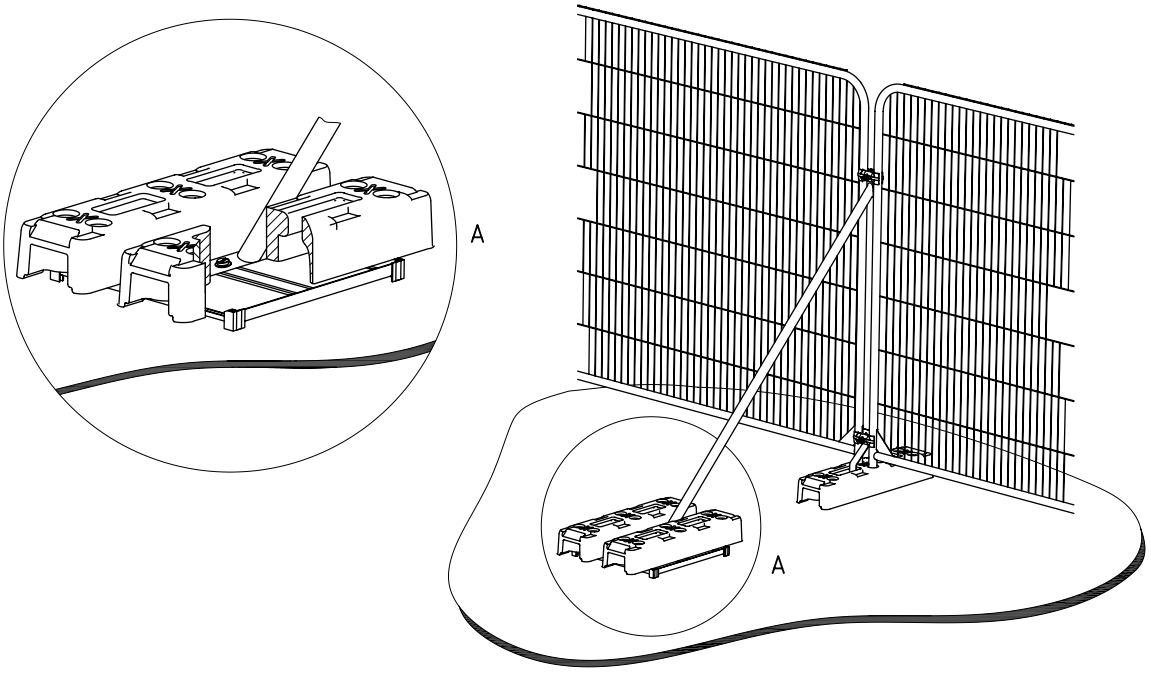

b) Stabilizer strut mounted on block tray

APPENDIX 2 – Ground Protection

Where ground protection measures are necessary, they can be provided by laying a geotextile mat onto the existing ground level and adding to this compressible materials, such as bark mulch or sharp sand to form a safe, level surface. Onto this surface is laid scaffold boards which become the working surface for the duration of the construction phase.

Where scaffolding is proposed above the area requiring protection the footway can be suspended above ground level using the upright scaffold poses onto which horizontal supports can be attached and then boards used to form the footway surface. A geotextile mat should be laid on the ground beneath to prevent contamination from materials dropped through the footway.

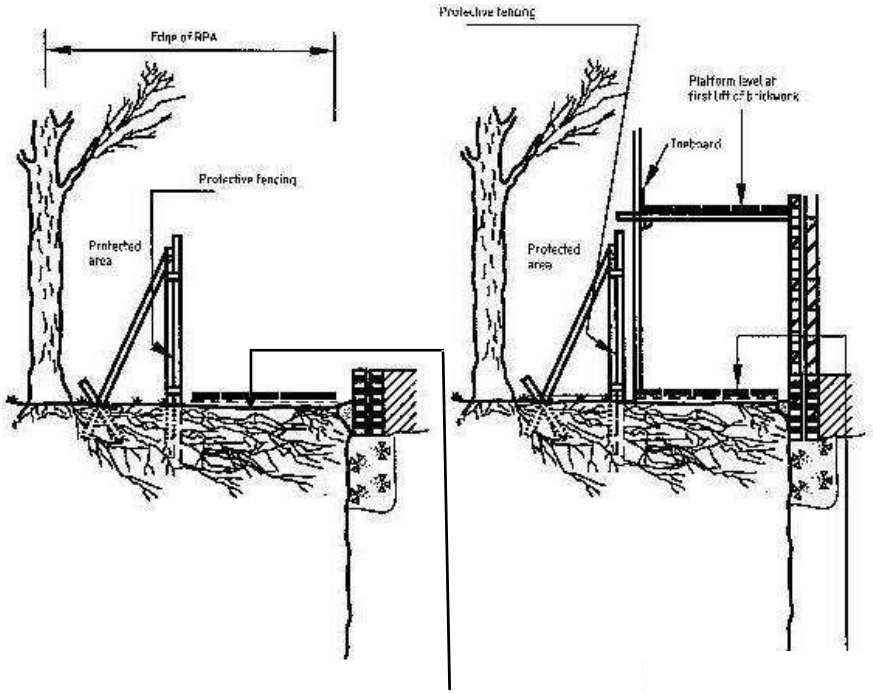

Ground undisturbed and protected by geotextile fabric, and side butting scaffold boards on a compressible layer

APPENDIX 3 – Tree Protection Plan

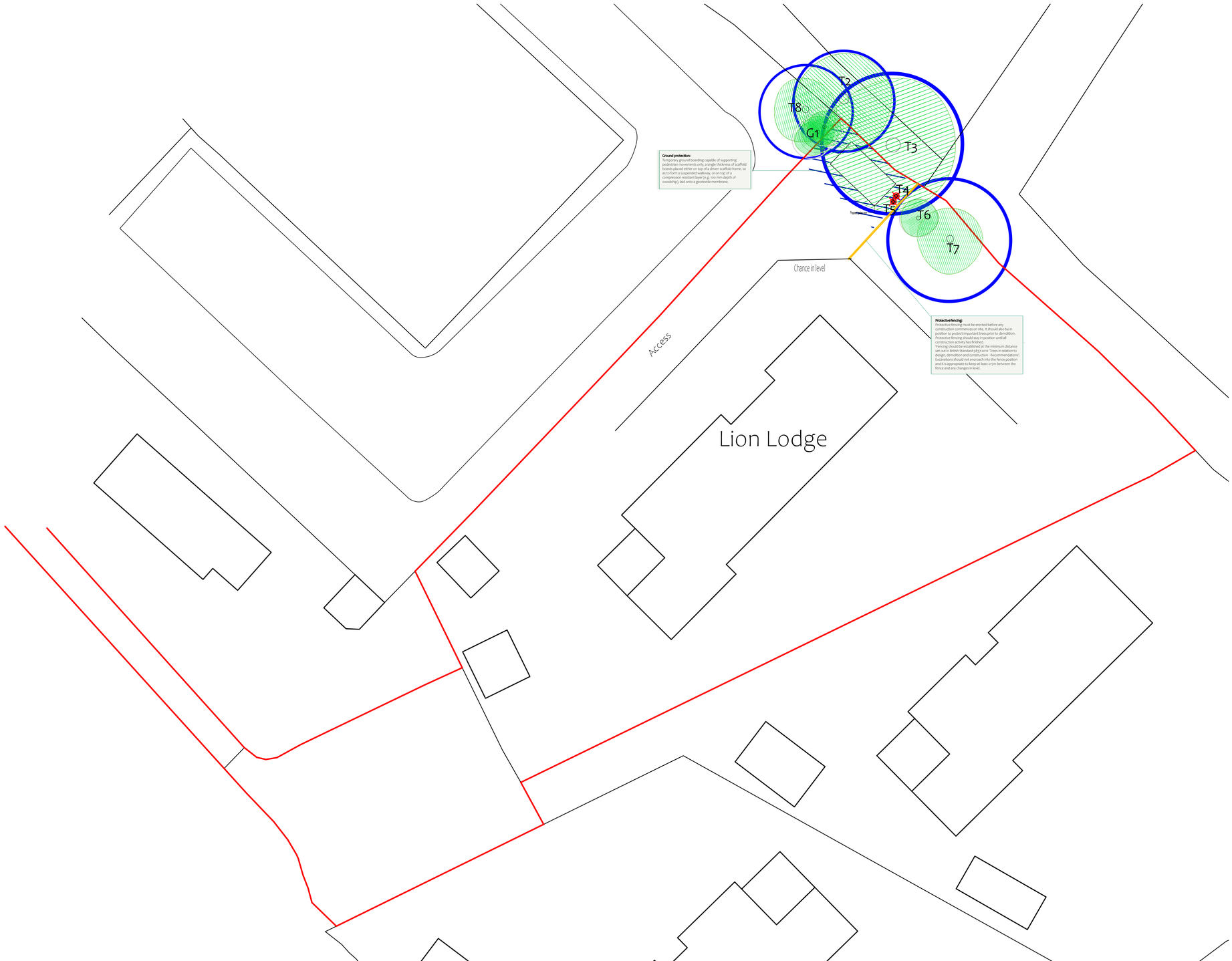

RPA for Cat A* tree

RPA for Cat B* tree

RPA for Cat C* tree

RPA for Cat U* tree

Tree Canopy

Tree Removal

Heras Fencing

Ground Protection

All Arboriculture
23 Southernhay Avenue
Bristol
BS8 4TJ

ALLARBORICULTURE

Client:	Vivid Green
Consultant:	Kristian Chesterman
Site:	Lion Lodge, Bashurst Hill, Horsham, RH13 0PB
Title:	Tree Protection Plan

Scale at A1:	Date:	Document Ref.
1:250	23/06/2025	AATPPLION