SCALE 1:50

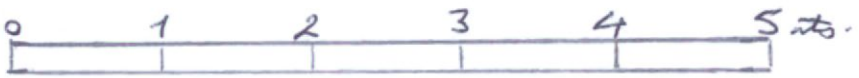

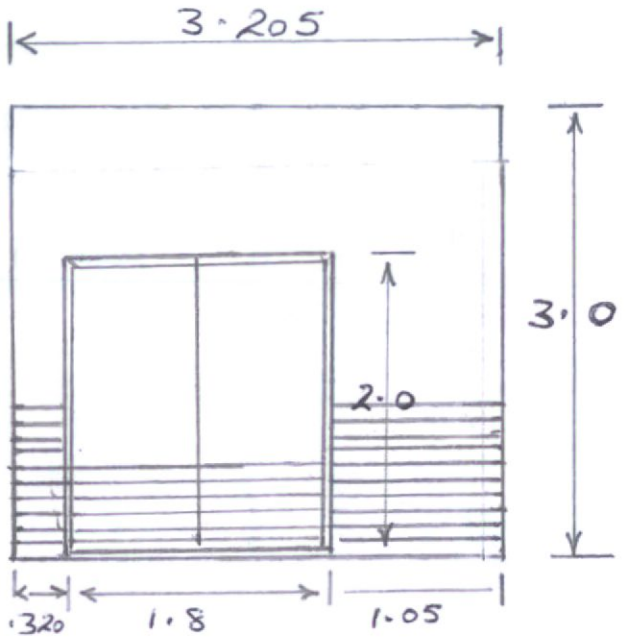

FRONT ELEVATION

ITEM A.

ITEM A; TIMBER FRAME, CLAD IN FEATHEDGE BOARDING TO MATCH EXSISTING BARN.

OPENING DOOR CLAD IN FEATHEDGE BOARDING TO MATCH.