Absolute Arboriculture
Maple Lodge
Brighton Road
Lower Beeding
West Sussex
RH13 6PS

Email. max@absolutearb.com
Web. www.absolutearb.com
Tel. 07759482934

Arboricultural Impact Assessment

Client: Mr Nick Sutton

Location: Lock House, Lock Lane, Partridge Green, West Sussex, RH13 8EG

Date of Inspection: 28th April 2026

Inspector: Max Ferretti ND Arb, TechArborA

Reference: AIA-LH-28/4/26

1.0 Instructions and Terms

1.1 Instructions Received

I am instructed by Mr Nick Sutton to inspect the significant trees in accordance with British Standard 5837:2012 Trees in Relation to Design, Demolition and Construction.

1.2 Terms of Reference

To carry out a tree survey where all significant trees are plotted onto a plan and the collected data is provided in a schedule. Where appropriate, preliminary management recommendations will be made.

1.3 Documents Supplied

The following plans were provided:

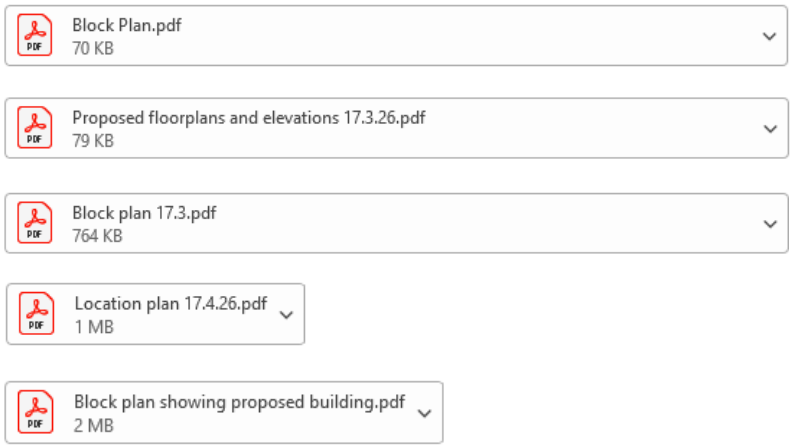

1.4 Limitations of Use and Copyright

This report is for the exclusive use of the Client or their agents. It may not be sold, lent, hired out, or divulged to any third party not directly involved in the subject matter.

2.0 Scope and Method of Tree Survey

2.1 Survey Date and Personnel

The survey was carried out on 23rd April by Max Ferretti

2.2 Survey Extent

All significant on-site and relevant off-site trees were included.

2.3 Survey Method

The survey is based on a ground-level assessment using the Visual Tree Assessment (VTA) method (Mattheck & Breloer, 1994).

2.4 Diameter and RPA Assessment

Trees under 75 mm diameter at 1.5 m were excluded unless of particular merit. Diameters were measured in millimetres at 1.5 m. Root Protection Areas (RPAs) were calculated in accordance with BS5837.

2.5 Height and Crown Measurement

Tree heights were measured using a clinometer; crown spreads using a laser measure. Dimensions are given in metres.

2.6 Group and Off-Site Trees

Dimensions for groups are averaged unless otherwise stated. Off-site tree dimensions are estimated unless full access is available.

3.0 Existing Trees

3.1 Tree Population

A total of 16 individual trees were recorded.

3.2 Tree Schedule

Appendix 1 contains the tree schedule, including dimensions, condition, life expectancy, and BS5837 retention categories.

4.0 BS5837:2012 cascade chart for tree quality assessment

Table 1 Cascade chart for tree quality assessment

Category and definition	Criteria (including subcategories where appropriate)			Identification on plan
Trees unsuitable for retention (see Note)				
Category U Those in such a condition that they cannot realistically be retained as living trees in the context of the current land use for longer than 10 years	• Trees that have a serious, irremediable, structural defect, such that their early loss is expected due to collapse, including those that will become unviable after removal of other category U trees (e.g. where, for whatever reason, the loss of companion shelter cannot be mitigated by pruning) • Trees that are dead or are showing signs of significant, immediate, and irreversible overall decline • Trees infected with pathogens of significance to the health and/or safety of other trees nearby, or very low quality trees suppressing adjacent trees of better quality *NOTE Category U trees can have existing or potential conservation value which it might be desirable to preserve; see 4.5.7.*			See Table 2
	1 Mainly arboricultural qualities	**2 Mainly landscape qualities**	**3 Mainly cultural values, including conservation**	
Trees to be considered for retention				
Category A **Trees of high quality** with an estimated remaining life expectancy of at least 40 years	Trees that are particularly good examples of their species, especially if rare or unusual; or those that are essential components of groups or formal or semi-formal arboricultural features (e.g. the dominant and/or principal trees within an avenue)	Trees, groups or woodlands of particular visual importance as arboricultural and/or landscape features	Trees, groups or woodlands of significant conservation, historical, commemorative or other value (e.g. veteran trees or wood-pasture)	See Table 2
Category B **Trees of moderate quality** with an estimated remaining life expectancy of at least 20 years	Trees that might be included in category A, but are downgraded because of impaired condition (e.g. presence of significant though remediable defects, including unsympathetic past management and storm damage), such that they are unlikely to be suitable for retention for beyond 40 years; or trees lacking the special quality necessary to merit the category A designation	Trees present in numbers, usually growing as groups or woodlands, such that they attract a higher collective rating than they might as individuals; or trees occurring as collectives but situated so as to make little visual contribution to the wider locality	Trees with material conservation or other cultural value	See Table 2
Category C **Trees of low quality** with an estimated remaining life expectancy of at least 10 years, or young trees with a stem diameter below 150 mm	Unremarkable trees of very limited merit or such impaired condition that they do not qualify in higher categories	Trees present in groups or woodlands, but without this conferring on them significantly greater collective landscape value; and/or trees offering low or only temporary/transient landscape benefits	Trees with no material conservation or other cultural value	See Table 2

© The British Standards Institution 2012 • 9

5.0 Tree Constraints

5.1 Overview

Survey data provides the basis for identifying above and below-ground constraints imposed by trees suitable for retention.

5.2 Below-Ground Constraints

RPAs indicate the minimum area that should remain undisturbed to avoid damage to roots or the rooting environment

5.3 Root Protection Areas (RPAs)

In the case of open-grown trees with an even, radial root distribution, it is normal for the boundaries of the Root Protection Area (RPA) to be equidistant from the trunk. However, the actual disposition of tree roots may be influenced by site-specific factors such as existing building foundations, hard surfacing, or poor soil conditions beneath highways. BS5837 advises that these factors should be assessed by the arboriculturist, and appropriate adjustments to the

siting of the RPA made where necessary, provided the overall area is not reduced.

5.4 RPA Representation

The RPA for each retained tree is detailed within the tree schedule and shown on the tree survey plan. Where offsetting or modification of the RPA is appropriate, this will be specifically noted.

6.0 Proposed Development

6.1 Construction of Holiday Cottage

7.0 Impact of Proposed Development

7.1 The proposal will require two trees to be removed. T9 Ash (cat U) and T11 Ash (cat C) to be felled.

7.2 There are incursions to two RPAs, T1 Pine (4.75%) and, T10 Oak (-1 %).

7.3 Appropriate mitigation will be required. Use of a no-dig construction method. Installation of ground protection to prevent soil compaction. Measures to avoid damage to stems, buttresses, or surface roots. All works within RPAs must follow BS5837 guidance and be supervised by the project arboriculturist.

7.4 Existing Surfaces Within RPAs

Where construction access or vehicle movement is required over existing hard surfaces within RPAs, these surfaces may be used provided they remain intact and are capable of supporting the load without deformation. Movement of heavy vehicles must be limited and controlled to avoid adverse effects on underlying soils.

7.5 Underground Services

New underground services should be routed outside RPAs wherever possible. Where service entry points or unavoidable incursions occur near retained trees, care must be taken to protect underlying soils and avoid root damage. No underground services shall be installed within RPAs unless appropriate mitigation measures are implemented and approved.

8.0 Overall Impact and Safeguarding

Provided that all tree protection measures detailed in the Arboricultural Method Statement and shown on the Tree Protection Plan are implemented and strictly maintained, retained trees should be adequately safeguarded from the effects of construction activity.

Appendix 1 - Tree Schedule

Site: Land east of Lock House, Lock Lane, Partridge Green, RH13 8EG

Max Ferretti t/a Absolute Arboriculture
Tel. 07759482934

						Spread (m)										
Ref.	Species	Height	Num. Stems	Stem diameter(s) (mm)	Crown Clearance (m)	North	East	South	West	Phys Condition	Structural Condition	Life Stage	Comments / Recommendations	RPA Radius	RPA m2	Retention Category
T1	Scots pine *(Pinus sylvestris)*	15	1	650	5.0	6.0	4.0	4.0	4.0	Fair	Fair	Mature	Stem leans slightly north. Deadwood present	7.8	191	B
T2	Scots pine *(Pinus sylvestris)*	15	1	600	5.0	4.0	4.0	4.0	3.0	Fair	Fair	Mature	Stem leans slightly north. Deadwood present	7.2	163	B
T3	Common ash *(Fraxinus excelsior)*	15	1	290	6.0	8.0	4.0	1.0	6.0	Poor	Poor	Early Mature	Suppressed. Crown dominant to west. Signs of ADD	3.5	38	C
T4	Scots pine *(Pinus sylvestris)*	15	1	510	5.0	7.0	5.0	2.0	3.0	Poor	Poor	Mature	Stem leans Northeast. Exposed roots to southwest and lifted rootplate. Major decay on stem to east at 2m from ground level up to 8m.	6.1	117	U
T5	Pedunculate oak *(Quercus robur)*	17	1	790	4.0	8.0	10.0	10.0	10.0	Fair	Fair	Mature	Suppressed to north, deadwood present	9.5	284	B
T6	Pedunculate oak *(Quercus robur)*	12	1	500	2.0	5.0	3.0	6.0	4.0	Fair	Fair	Mature	Suppressed, deadwood present	6	113	C
T7	Pedunculate oak *(Quercus robur)*	15	1	630	2.0	6.0	3.0	11.0	10.0	Fair	Fair	Mature	Dominant crown west, deadwood present	7.6	181	B
T8	Common ash *(Fraxinus excelsior)*	20	1	690	10.0	11.0	8.0	13.0	7.0	Fair	Fair	Mature	Dominant crown east, deadwood present. Early signs of ADD	8.3	216	C
T9	Common ash *(Fraxinus excelsior)*	12	2	350, 200	7.0	2.0	5.0	7.0	7.0	Poor	Poor	Early Mature	Decay in stems from ground level up to 5m	4.8	72	U
T10	Pedunculate oak *(Quercus robur)*	20	1	720		5.0	7.0	8.0	7.0	Fair	Fair	Mature	Deadwood present	8.6	232	B
T11	Common ash *(Fraxinus excelsior)*	8	1	220	2.0	0.0	0.0	7.0	9.0	Poor	Poor	Early Mature	Suppressed. Stem leans southwest.Included wound 2-3m from ground level.	2.6	21	C
T12	Not identified *(Not identified)*	12	1	290	2.0	3.0	3.0	6.0	7.0	Fair	Fair	Early Mature	Crown dominant west. Deadwood present	3.5	38	B
T13	Pedunculate oak *(Quercus robur)*	20	1	770	8.0	14.0	6.0	8.0	9.0	Fair	Fair	Mature	Deadwood present	9.2	266	B
T14	Pedunculate oak *(Quercus robur)*	15	1		8.0	7.0	0.0	7.0	7.0	Poor	Decaying	Dead	Dead standing	0	0	U

T15	Pedunculate oak *(Quercus robur)*	20	1	650	5.0	2.0	7.0	11.0	9.0	Fair	Fair	Mature	Crown dominant south. Deadwood present	7.8	191	B
T16	Goat willow *(Salix caprea)*	5	1	410	0.0	0.0	8.0	7.0	1.0	Poor	Poor	Mature	Situated in ditch, broken, hung-up stem in crown	4.9	75	C

Absolute Arboriculture
Maple Lodge
Brighton Road
Lower Beeding
West Sussex
RH13 6PS

Email. max@absolutearb.com
Web. www.absolutearb.com
Tel. 07759482934

ARBORICULTURAL METHOD STATEMENT

Site: Lock House, Lock Lane, Partridge Green, West Sussex, RH13 8EG

Important note:

It is essential that this method statement, the Tree Protection Plan (TPP) and any other documents relating to tree protection are provided to the project manager prior to the commencement of any works on site. All personnel involved in the project must be made aware of the content of these documents and the importance of implementing and maintaining a robust approach to the protection of retained trees. Failure to adhere to approved tree protection measures may result in a breach of planning conditions.

1.0 Introduction

1.1 This Arboricultural Method Statement (AMS) and the accompanying Tree Protection Plan (TPP) are prepared in accordance with the principles set out in British Standard 5837:2012 Trees in Relation to Design, Demolition and Construction – Recommendations and current best practice.

1.2 This document should be read in conjunction with the Tree Constraints Plan and the project-specific Tree Protection Plan.

2.0 Arboricultural Supervision

2.1 Successful integration of development within or adjacent to existing trees relies on those trees being properly protected throughout all phases of the project, from site clearance through to construction and final landscaping. BS5837

recommends the retention of a suitably qualified arboriculturist to oversee all tree-related matters for the duration of the construction period.

2.2 The arboriculturist shall attend a pre-commencement site meeting with the Project Manager and Site Manager prior to any works on site. The programme of works will be reviewed and an outline schedule of arboricultural supervision visits agreed.

2.3 Site visits by the arboriculturist should coincide with key tree-related stages, including:

- Preliminary arboricultural works or site clearance
- Installation of tree protection measures
- Any works within Root Protection Areas (RPAs), such as removal of hard surfaces or installation of underground services
- Any change in site or project management personnel

2.4 The supervision schedule may be reviewed and amended if required due to unforeseen events or failures in maintaining approved tree protection measures. The Local Planning Authority (LPA) shall be informed of any changes.

2.5 Any works undertaken within Construction Exclusion Zones must be carried out under the direct supervision of the arboriculturist.

2.6 The arboriculturist shall be available to attend site meetings at the request of the LPA.

2.7 The arboriculturist shall also be available should any unexpected conflicts with trees arise during construction.

2.8 A written log of all site inspections shall be maintained. Any contraventions of tree protection measures, or incidents that may affect retained trees, shall be reported to the Site Manager in writing. Copies of inspection logs and reports shall be available for inspection by the LPA.

3.0 Facilitation Tree Works

3.1 Prior to the commencement of any site clearance or construction works, T9 Ash and T11 Ash must be removed. Although not a requirement for the proposal, T4 Pine and T14 Oak should also be considered for removal as they have major defects which carry risk positioned next to the footpath. T14 should be left standing as a habitat feature where safe to do so.

3.2 Specific facilitation works are detailed on the accompanying Tree Protection Plan (TPP).

3.3 All facilitation works must be completed prior to the commencement of construction and shall be carried out in accordance with the TPP.

3.4 No additional tree works shall be undertaken without prior consultation with the local planning authority.

4.0 Tree Protection Barriers

4.1 Tree protection barriers shall be installed prior to the commencement of any site clearance or construction works.

4.2 Vertical tree protection barriers shall be erected in the positions indicated on the Tree Protection Plan (TPP). Barriers shall consist of a system of weldmesh panels (e.g., Heras type) securely fixed to scaffold poles, stabilised on rubber or concrete feet, and secured with ground pins driven firmly into the ground. Bracing shall be installed as illustrated on the TPP. These barriers form the Construction Exclusion Zone and protect areas adjacent to retained trees from all construction activity.

4.3 Any existing boundary fencing should remain in place throughout the construction period.

4.4 Tree protection fencing must not be moved, altered, or removed without the supervision and approval of the project arboriculturist.

5.0 Site Access and Storage of Materials

5.1 Temporary storage of materials shall be confined to designated areas outside all Root Protection Areas (RPAs) and Construction Exclusion Zones, as indicated on the Tree Protection Plan (TPP). No materials, equipment, or spoil shall be stored within RPAs at any time.

5.2 Great care shall be taken to ensure that the booms of excavators and all machinery used in the delivery or movement of materials do not damage the crowns or stems of retained trees. All activities close to trees must be carefully planned and controlled.

5.3 Particular care shall be taken to prevent the spillage of toxic chemicals such as cement, fuel, or oils. All such substances shall be stored and mixed on robust plastic sheeting. Contaminated water from washing tools or equipment shall not be permitted to enter soils within or adjacent to RPAs or areas designated for future planting.

6.0 Groundworks

6.1 All works shall be undertaken from outside RPAs. Where this is not possible, appropriate ground protection must be installed as shown on the TPP. Existing foundations may be used as locations for stockpiling demolition debris where feasible.

6.2 Machinery used during groundworks must work backwards from RPAs and operate with extreme care to prevent debris entering protected areas.

6.3 No materials shall be stockpiled on any area within the RPA.

6.4 Under no circumstances shall any machinery or vehicles operate or traverse across exposed soils within RPAs.

7.0 Excavations for foundations

7.1 Excavations are to be carried out with great care to minimise disturbance to underlying soils. Excavations shall not extend into the soil or root zone of trees.

7.2 Any excavators used in these works shall be fitted with a grading bucket without ‘teeth’. The bucket must be used so that the cutting edge is horizontal to minimise disturbance of the underlying soil.

7.3 In the event that tree roots are exposed during these works they shall be cut back cleanly using handsaw or secateurs. Great care shall be taken to avoid ripping or tearing roots back to towards the tree stem.

8.0 Installation of New Underground Services

8.1 The installation of new underground services can present a particular risk of damage to trees. Even relatively shallow excavations, if carried out without appropriate care, can cause considerable damage to roots.

8.2 In the event that changes to the routing of new services is required, the arboriculturist shall be consulted to ensure that trees remain unaffected.

9.0 Tree Protection Barriers and Ground Protection

Tree protection fencing must be used to physically prevent damage to trees and their root systems during development. Note: The style of tree protection barrier here is recommended in BS5837:2012
'Heras' weldmesh panels securely attached to scaffold poles driven firmly into ground and braced with supporting scaffold poles. Where fencing is in or near RPA's, base supports are to be used to prevent damaging any roots underneath.

10.0 Working area / Access

Ground protection boards must be used to protect the soil and roots from damage when construction activity must occur inside or across RPAs. Ground boards such as 'EuroMat' or 'TuffTrak' (dependent upon loading), held together fixed with connection plates. Where access is for pedestrian or light machinery use only, scaffold boards or 18mm ply sheets may be used, these may need to be bolted together to add strength and to prevent movement. Existing ground for pedestrian access hollows should be filled with topsoil or woodchip. For vehicular / heavy machinery use or if prolonged access is required a 100- 150 mm bed of wood or bark chip should be laid underground boards Geotextile membrane such as Terram 1000 as a separating layer.

10.1 Example of protection fencing



11.0 Example of protection fencing

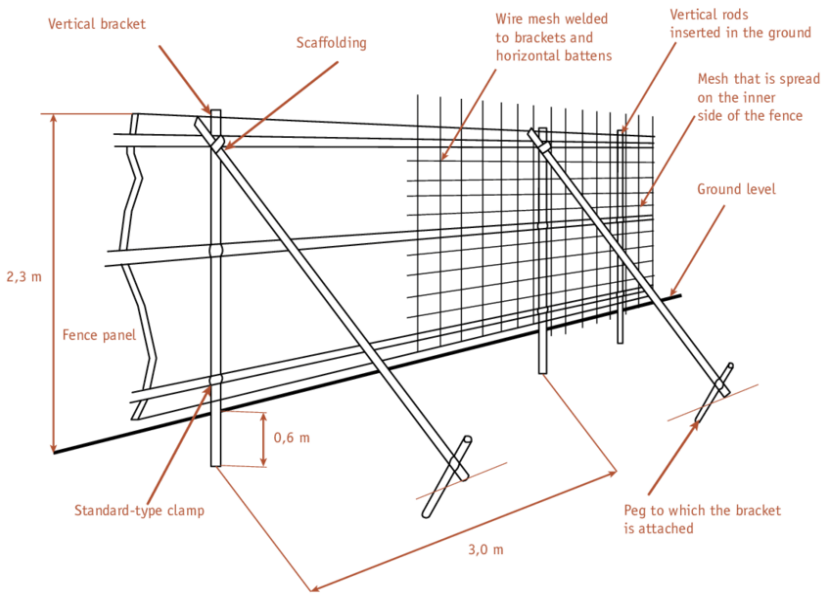

12.0 Example of protective fencing signs

Signs such as these must be firmly secured onto each fence panel.





This report has been prepared by Max Ferretti ND Arb, TechArborA

Signed:

[redacted]

Max Ferretti ND Arb, TechArborA
T/A Absolute Arboriculture

Date. 3rd June 2026