The Post House Cafe
Garden Kitchen

North Elevation

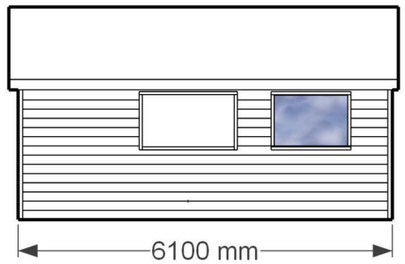

South Elevation

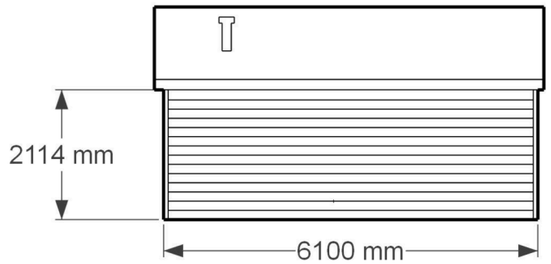

East Elevation

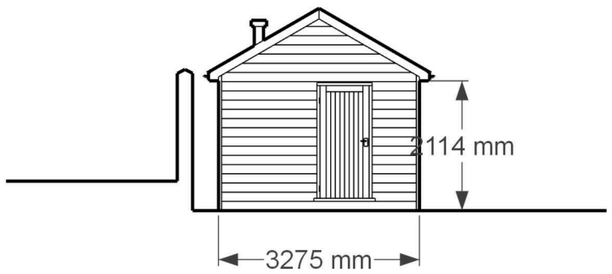

West Elevation

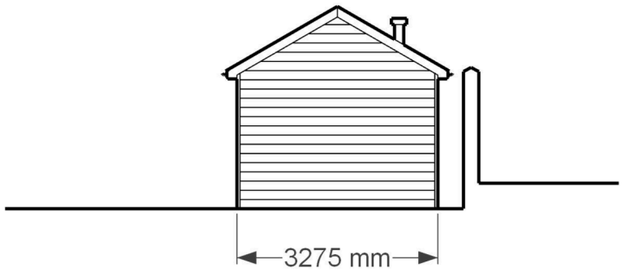

Roof and kitchen footprint (external dimensions)

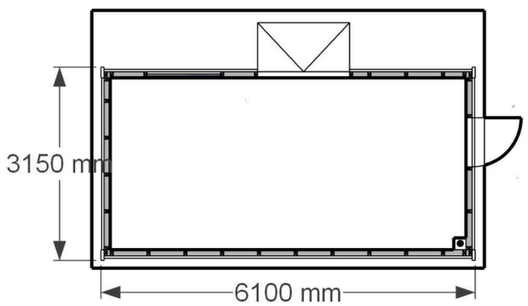

Kitchen layout (internal dimensions)

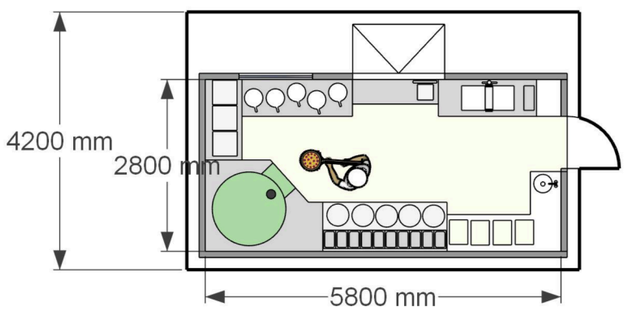

0 1m 2m 3m

Scale Bar

Notes:

1. DEFRA approved twin wall class 1 flue pipe (wood fired oven)
2. Softwood weatherboard cladding to all elevations painted green.
3. Roofing - Cladco traditional corrugated profile
4. Kitchen sits behind car park /perimeter wall - roof visible.

All measurements should be checked on site.

Levels and heights are approximate only

3D models, perspective drawings and sketches are not to scale.

Scale: 1:100 @ A3

Drawing: Scale Plans

Location: Clarence House,
High Street, Henfield, BN5 9PJ

Date: 11/12/2024

Drawing Number: PHCGDN/101/B

Drawn by:
Richard Geary