Section A-A. SCALE 1:20

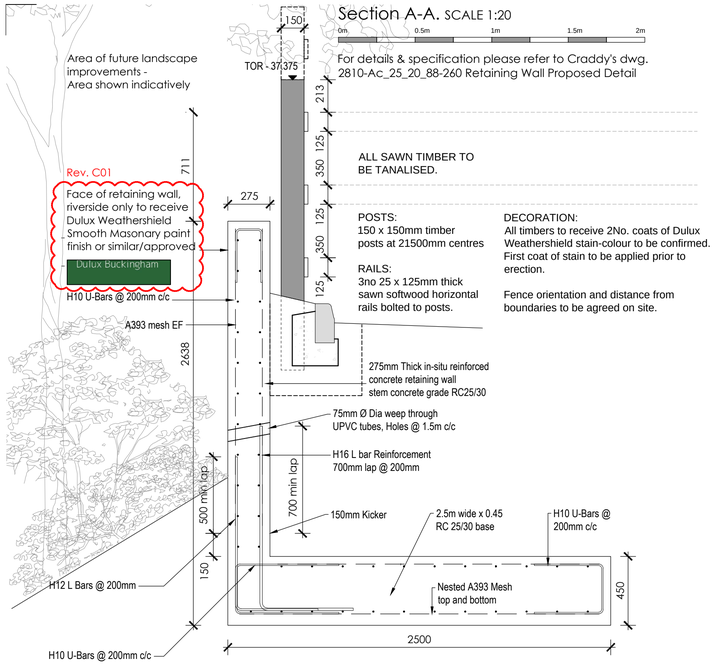

0m 0.5m 1m 1.5m 2m

For details & specification please refer to Craddy's dwg. 2810-Ac_25_20_88-260 Retaining Wall Proposed Detail

ALL SAWN TIMBER TO BE TANALISED.

POSTS:
150 x 150mm timber posts at 21500mm centres

RAILS:
3no 25 x 125mm thick sawn softwood horizontal rails bolted to posts.

DECORATION:
All timbers to receive 2No. coats of Dulux Weathershield stain-colour to be confirmed. First coat of stain to be applied prior to erection.

Fence orientation and distance from boundaries to be agreed on site.

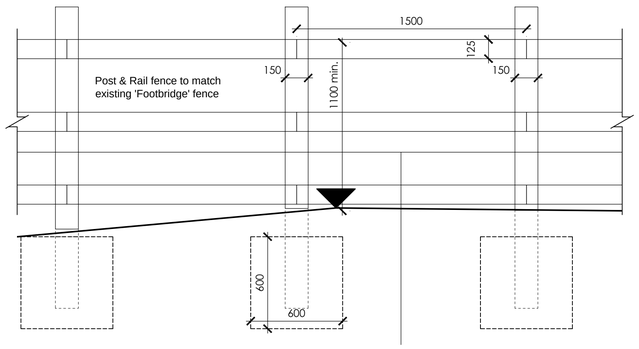

Detail 1 - Elevation (indicative). SCALE 1:20

0m 0.5m 1m 1.5m 2m


P1.

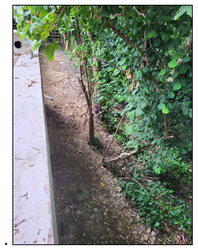
P2.


P3.


P4.


P5.

Bank Side Photo's



Section B-B. SCALE 1:20

0m 0.5m 1m 1.5m 2m

REV	DATE	DESCRIPTION	DRW	CHK
C01	15.08.2024	Paint finish to retaining wall specified	P.Mac	H.WG

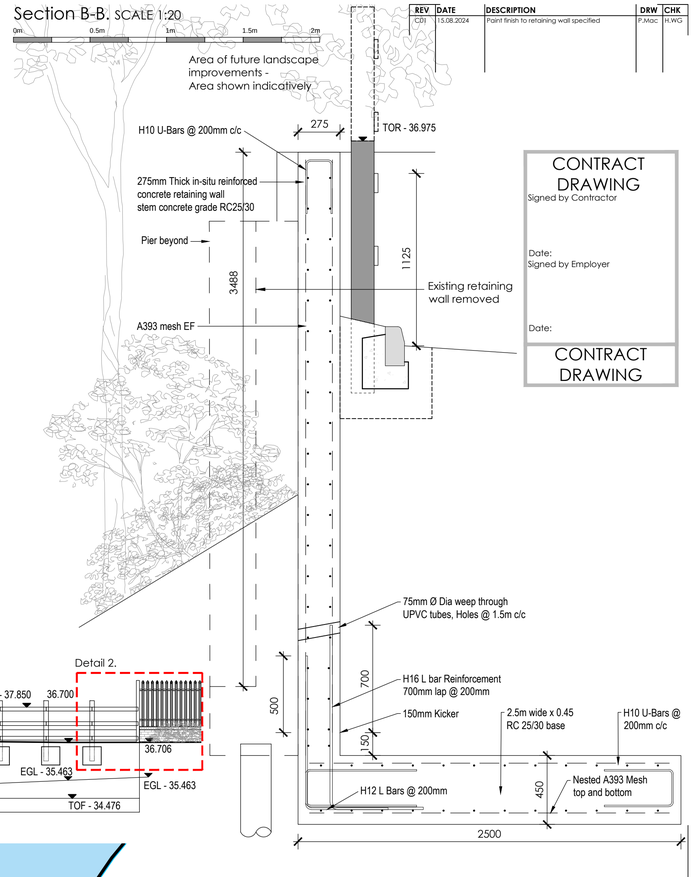

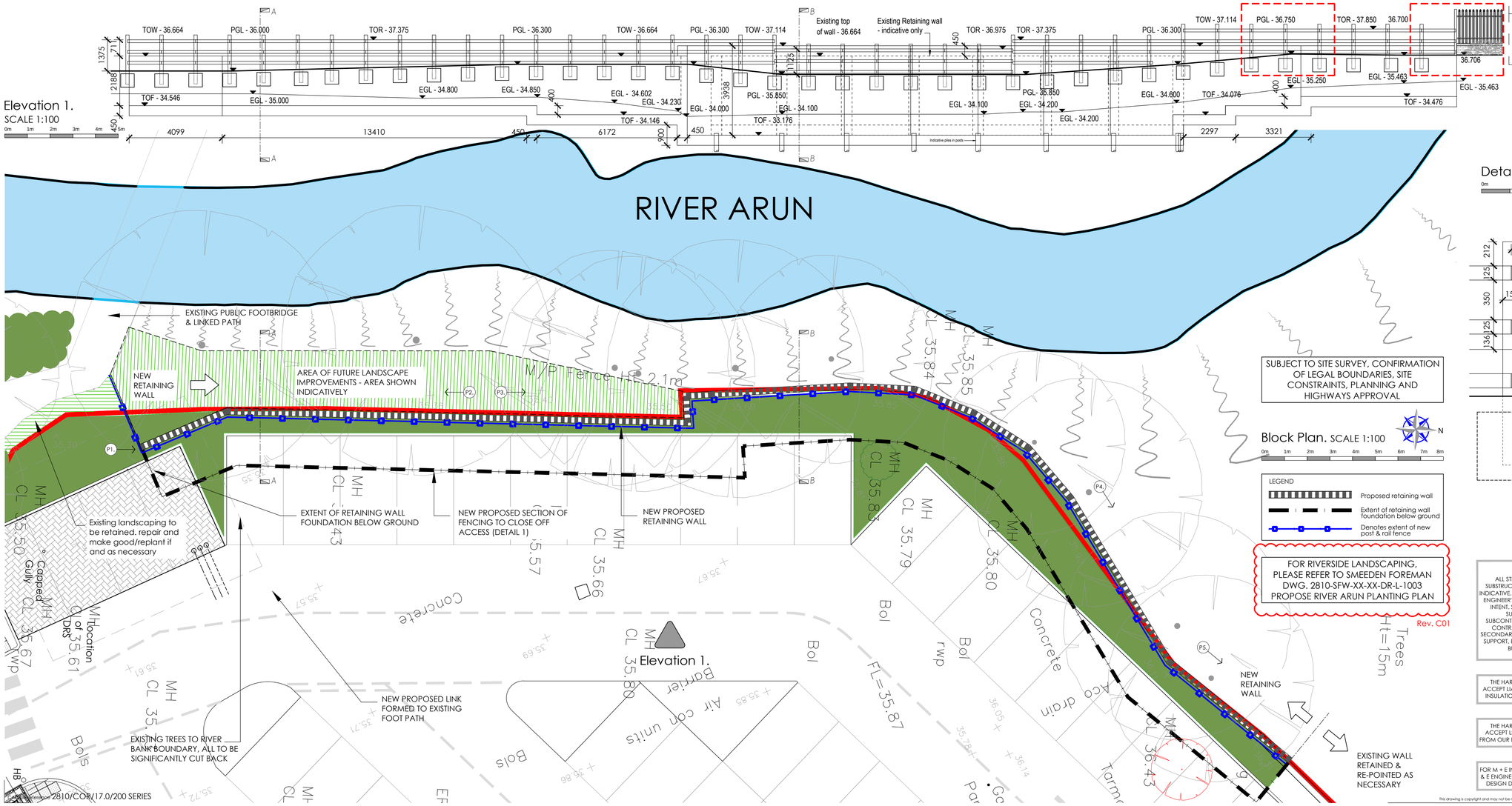

SUBJECT TO SITE SURVEY, CONFIRMATION OF LEGAL BOUNDARIES, SITE CONSTRAINTS, PLANNING AND HIGHWAYS APPROVAL

Block Plan. SCALE 1:100

0m 1m 2m 3m 4m 5m 6m 7m 8m

N

LEGEND
- Proposed retaining wall
- Extent of retaining wall foundation below ground
- Denotes extent of new post & rail fence

FOR RIVERSIDE LANDSCAPING, PLEASE REFER TO SMEEDEN FOREMAN DWG. 2810-SFW-XX-XX-DR-L-1003 PROPOSE RIVER ARUN PLANTING PLAN

Rev. C01

Detail 2 - Elevation. SCALE 1:20

0m 0.5m 1m 1.5m

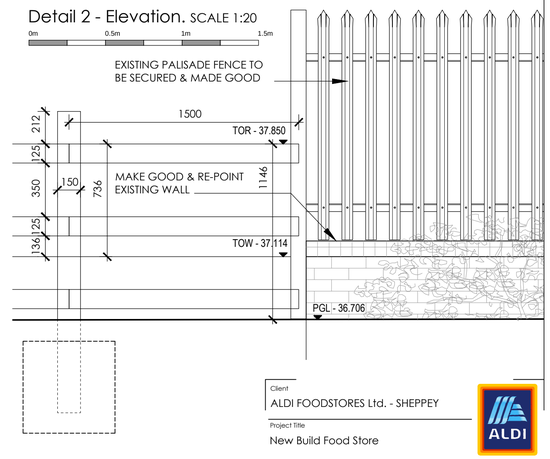

NOTE:
ALL STRUCTURAL STEELWORK & SUBSTRUCTURE ELEMENTS ARE SHOWN INDICATIVE. PLEASE REFER TO STRUCTURAL ENGINEER'S INFORMATION FOR DESIGN INTENT. STRUCTURAL STEELWORK IS SUBJECT TO SPECIALIST SUBCONTRACTOR'S DESIGN & DETAIL. CONTRACTOR TO CONSIDER ALL SECONDARY STEELWORK FOR CLADDING SUPPORT, BLOCKWORK RESTRAINT AND BUILDING OPENINGS.

THE HARRIS GROUP LTD DOES NOT ACCEPT LIABILITY FOR ANY COMPOSITE, INSULATION OR DECORATION PANELS

THE HARRIS GROUP LTD DOES NOT ACCEPT LIABILITY FOR ANY DEVIATION FROM OUR DRAWINGS OR SPECIFICATION

FOR M + E INFORMATION, REFER TO THE M & E ENGINEER'S AND SUB-CONTRACTOR'S DESIGN DRAWINGS & SPECIFICATION

Client
ALDI FOODSTORES Ltd. - SHEPPEY

Project Title
New Build Food Store

Project Address
Tanbridge Retail Park
Worthing Road
Horsham

Drawing Title
Retaing Wall- Proposed Details

Job No.	Originator	Zone	Level	Type	Role
2810	THP	XX	ZZ	DR	A

System Classification	Drawing No.	Suitability	Revision
Ac_25_20_88-260		A5	C01

Drawn	Checked	Date	Scale	Size
JP	KM	10.06.24	1:20 & 100	A1

THE HARRIS PARTNERSHIP WAKEFIELD
2 St. Johns North, Wakefield, WF1 3QA
t. 01924 291 800 f. 01924 290 072

THE HARRIS PARTNERSHIP MANCHESTER
2nd Floor, Carvers Warehouse,
77 Dale Street, Manchester, M1 2HG
t. 0161 238 8555 f. 0161 244 5809

THE HARRIS PARTNERSHIP MILTON KEYNES
The Old Rectory, 79 High Street
Newport Pagnell, MK16 8AB
t. 01908 211 577 f. 01908 211 722

THE HARRIS PARTNERSHIP READING
101 London Road, Reading, RG1 5BY
t. 0118 950 7700 f. 0118 956 8642

THE HARRIS PARTNERSHIP LONDON
10 GEES COURT, LONDON, W1D 1JJ
t. 020 7409 1215

THE HARRIS PARTNERSHIP
ARCHITECTS
www.harrispartnership.com

This drawing is copyright and may not be reproduced in whole or part without written authority. Do not scale off this drawing.

Survey Reference 2810/COR/17.0/200 SERIES