GREAT HOUSE FARM, SOUTHWATER - PLANNING APPLICATION/DECISION REF. DC/24/0690

Pre-commencement Condition

3no. replacement windows, first-floor, front (east) elevation, existing 3-casement design change to 4-casement design as recommended by Historic England

(Windows nos. 1, 2 and 3 by reference to planning application elevational drawings)

As for the other like-for-like replacement windows, new windows to be in European Oak, stained dark oak to match other windows, finished with 2 coats lacquer. To be fitted to existing sub-frames and to be glazed with 12mm thickness Slimline/Slenderline glazing and incorporating weather seals. 2no. opening casements to be hung on new stainless-steel, black coated 75mm butt hinges. Window furniture to be retained and re-used where possible, with any replacements to be in similar style.

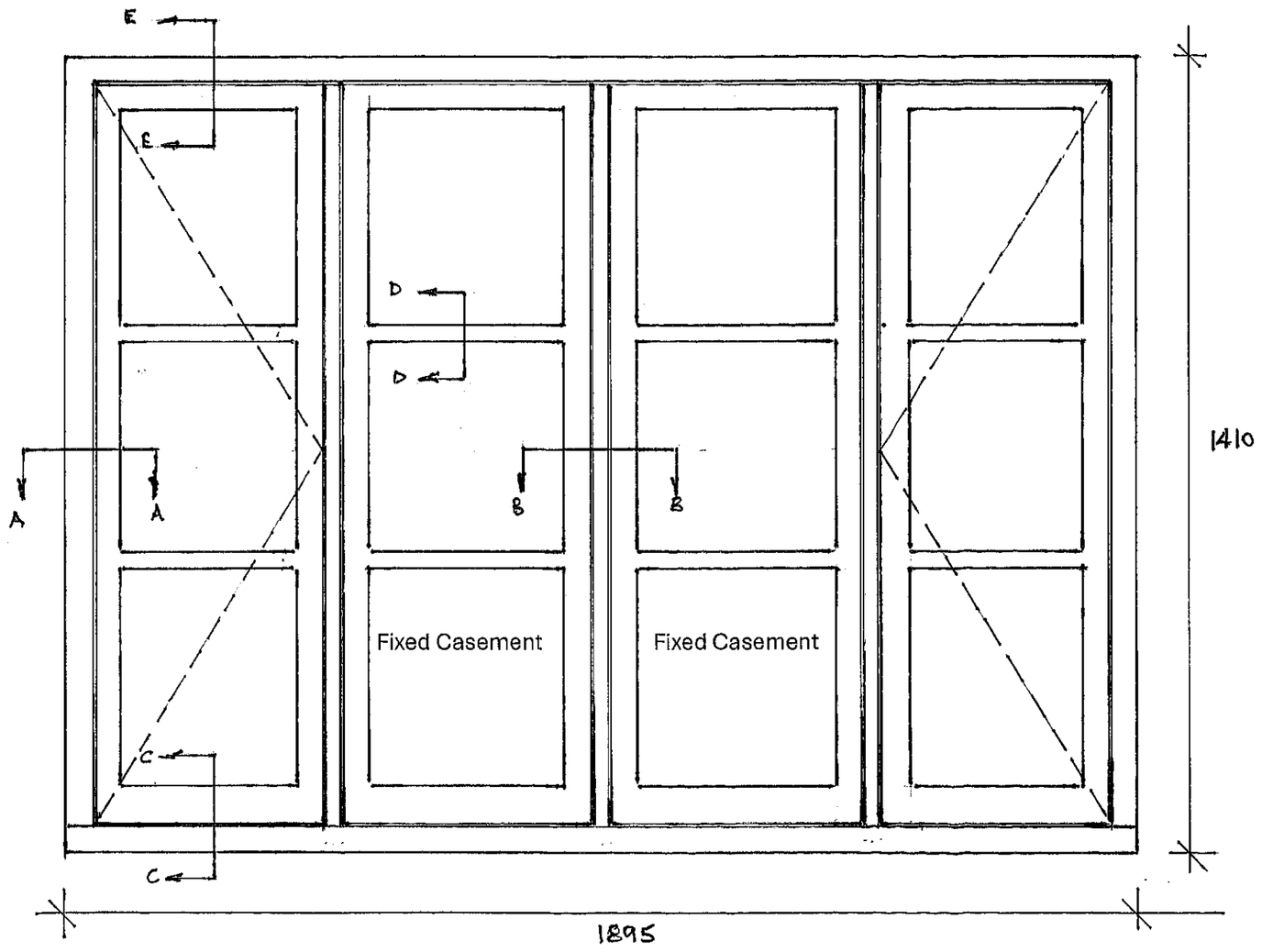

Scale 1:10 at A3

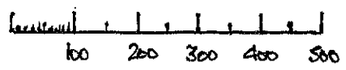

SECTION A - A
NEW WINDOW

Oak construction, dark oak stain to match original, lacquer finish

ACTUAL SIZE / SCALE 1 : 1

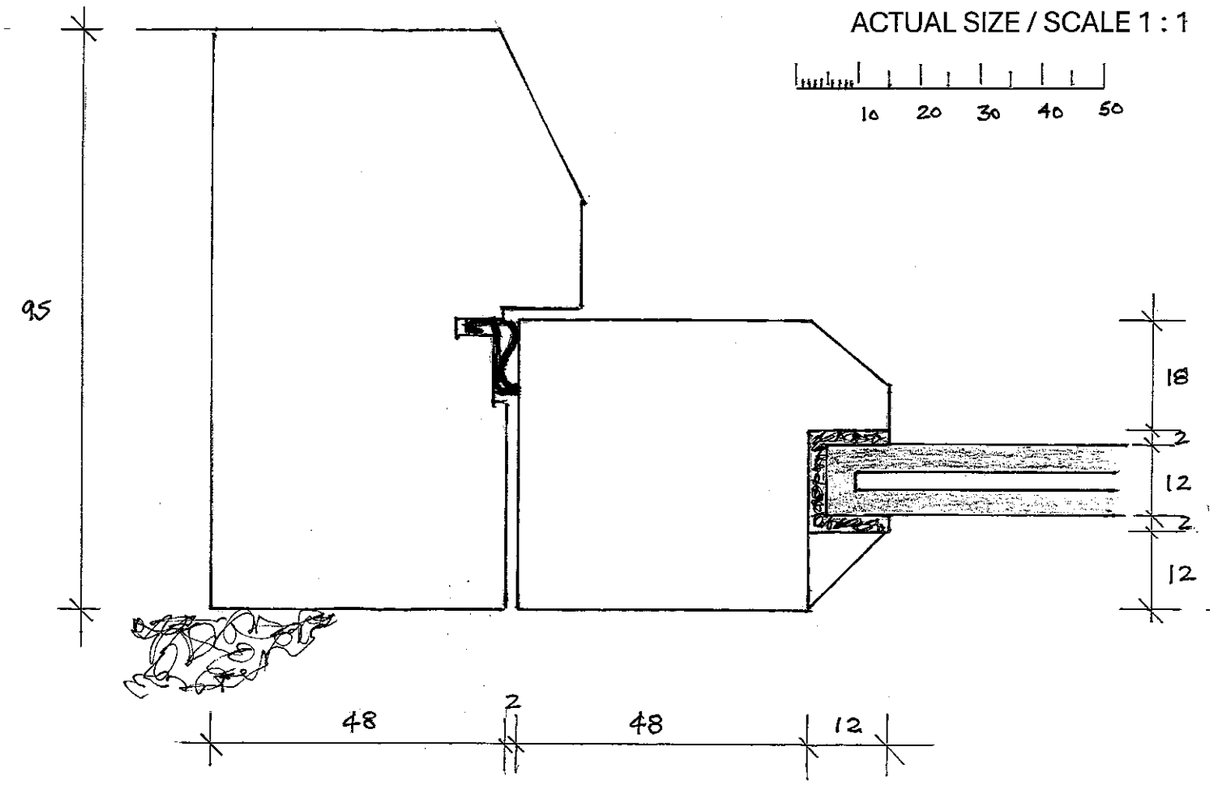

SECTION B - B
NEW WINDOW

ACTUAL SIZE / SCALE 1 : 1

Oak construction, dark oak stain to match original, lacquer finish

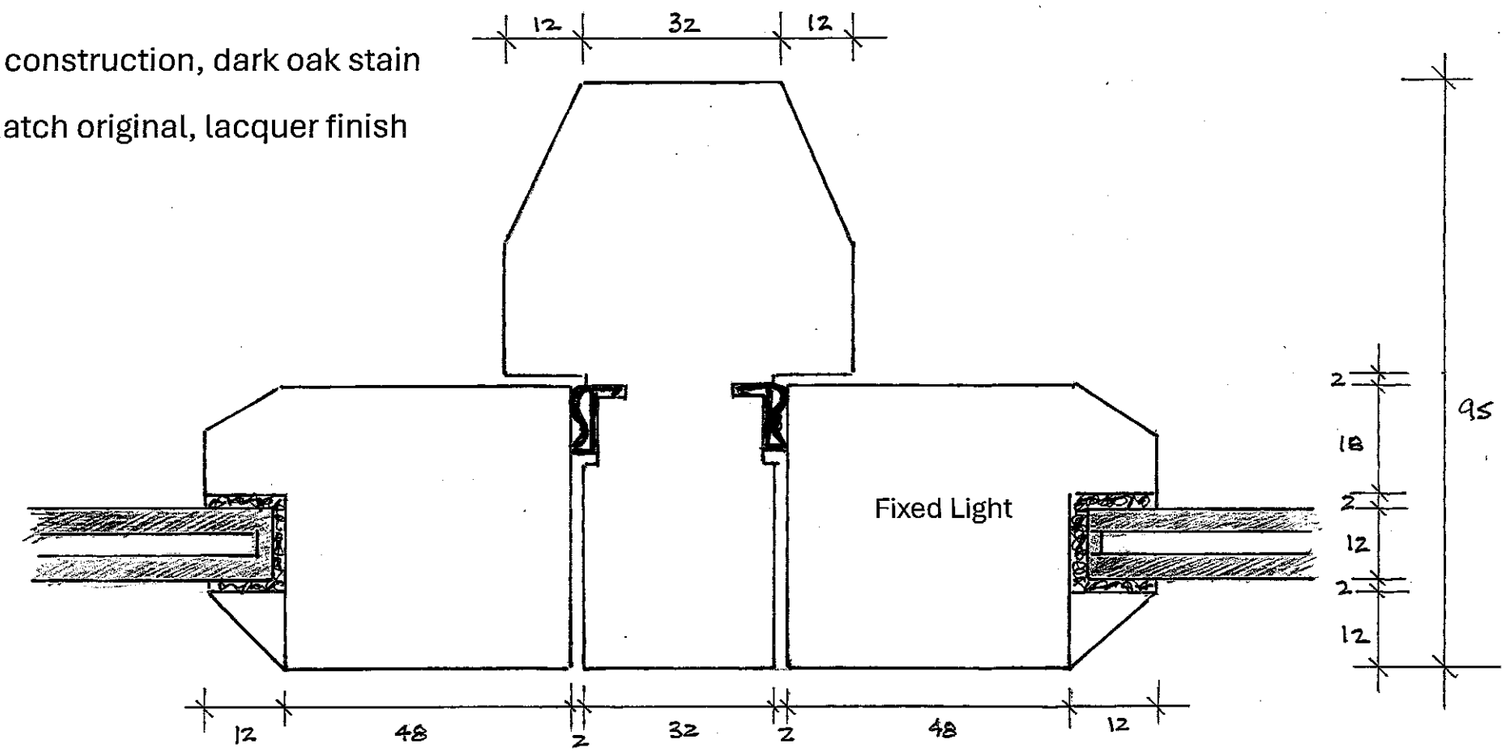

SECTION C - C
NEW WINDOW

Oak construction, dark oak stain to match original, lacquer finish

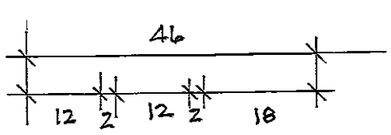

ACTUAL SIZE / SCALE 1 : 1

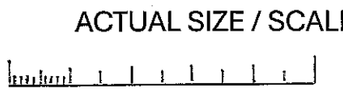

SECTION D - D
EXISTING & NEW WINDOW

ACTUAL SIZE / SCALE 1 : 1

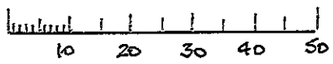

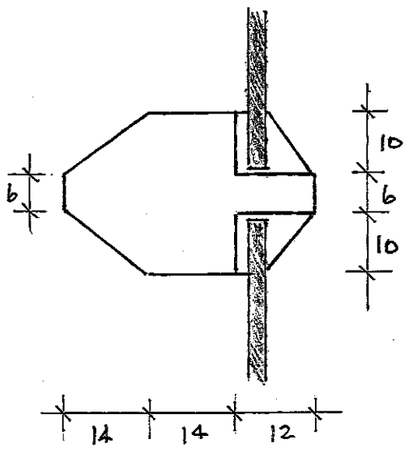

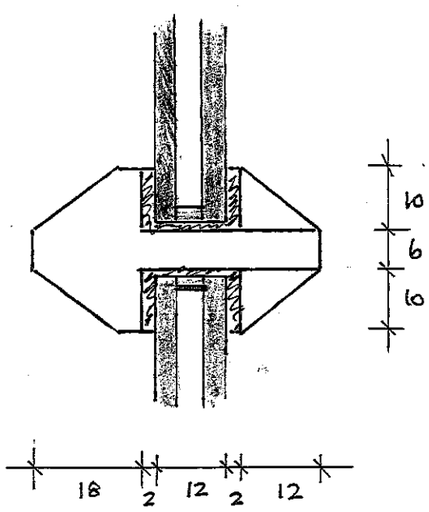

New windows to be oak construction, dark oak stain to match original, lacquer finish

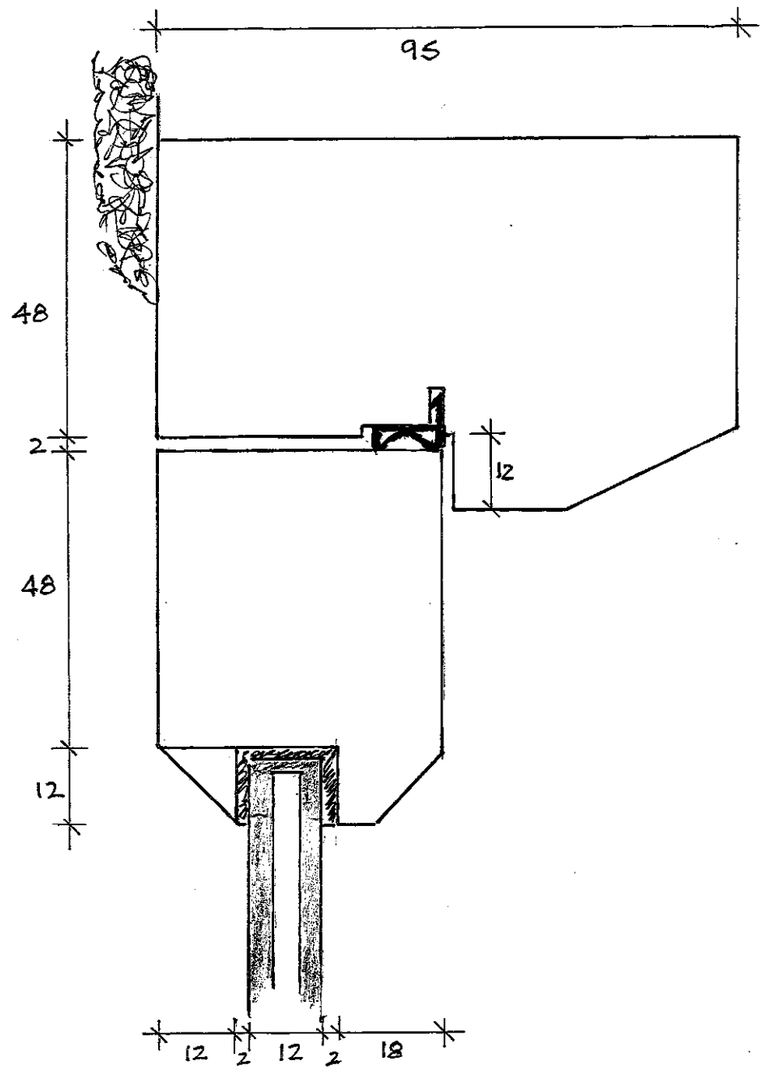

SECTION E - E
NEW WINDOW

Oak construction, dark oak stain to match original, lacquer finish

ACTUAL SIZE / SCALE 1 : 1

