Arboriculture Method Statement

Proposed Residential Scheme
Chanctonbury Nurseries, Ashington, West Sussex



Date: 20th May 2024 Revision: 00

PLANNING ISSUE

Author: Andrew Ramsay BA (Hons) MALA CMLI

Ref: RCo339 / Chanctonbury Nurseries / Rev00 / Planning / 20-05-24

Ramsay & Co
Landscape Architecture

The Studio, 68 Cuckfield Road, Hurstpierpoint, West Sussex, BN6 9SB
T: 01273 834 198 M: 07973 770047 E: Landscape@ramsayandco.com www.ramsayandco.com

1.0 INTRODUCTION

1.1 The Brief and Scope of the Report

1.1.1 On the 04thSeptember 2024, Horsham District Council approved permission for a residential development at Chanctonbury Nurseries, Rectory Lane, Ashington, Pulborough comprising the: *Demolition of existing buildings and erection of 74 dwellings with associated parking and landscaping.*

1.1.2 As part of the proposed scheme, a number of planning conditions were imposed by Horsham District Council including one which relates to the existing trees and shrubs: *7 Pre-Commencement Condition: No development shall commence until a plan detailing all trees and planting to be removed, and all trees to be retained on and adjacent to the site, including means for their protection during construction work, has been submitted to and approved, in writing, by the Local Planning Authority. Development shall be carried out in accordance with the approved details and no trees or hedges shown to be retained shall be wilfully damaged or uprooted, felled/removed, topped or lopped without the previous written consent of the Local Planning Authority until 5 years after completion of the development.*

1.1.3 This Arboriculture Method Statement [AMS] has been prepared by Andrew Ramsay (BA Hons) MALA who is a Landscape Architect and a chartered member of the Landscape Institute (CMLI).

1.1.4 This AMS should be read in conjunction with the following drawing:

- *RCo339-02 / Tree Protection Drawing;*
- *RCo339 / Existing Tree Schedule.*

1.1.5 The following tree is to be removed due to poor condition: TG 08 [c].

1.1.6 The following trees and hedgerow are to be removed to facilitate the proposed scheme: SG 03a / T 09 / T 18 / T 22 / H 21.

1.1.7 Table 01 identifies potential pruning works to existing trees which may be required to enable the proposed scheme as well as proposed mitigation measures:

Table 01	
TREE ID	**PROPOSED WORKS**
TG 08 [a]	Proposed temporary ground protection.
TG 08 [b]	
TG 08 [d]	
TG 08 [l]	
TG 13	
T 14 [i]	

TG 08 [d, e & f]	**Tree Protection Zone 'No Dig' Construction** designated area are to be constructed with a 'No Dig' permeable surface construction. Excavation to be limited to the removal of loose surface material / herb layer and carried out with a manual excavation method only with all existing ground levels to be maintained. The designated area is to be protected with geocell tree protection cellular confinement system installed as per manufacturers guidelines.
TG 08 [a]	Crown pruning to facilitate the proposed scheme and safe working area. Pruning as detailed within the tree schedule and to be constrained to > 2.0m
TG 13	
TG 14	

Method Statement: Introduction

1.1.8 The Method Statement (Section 04) is intended to provide guidance as to how the retained trees and shrubs are to be protected throughout the construction phase of the proposed development scheme in line with the recommendations as laid out within *BS5837-2012: Trees in Relation to Design, Demolition and Construction – Recommendations.*

1.1.9 Tree protection measures required to be implemented before the start of any construction activities include:

- *Tree / shrub removal;*
- *Positioning and installation of tree protection fencing;*
- *(Temporary & Permanent) ground protection for designated TRP areas.*

1.1.10 Measures to be addressed during the construction phase of the proposed development include:

- *General construction activities;*
- *Storage of materials, site cabin and facilities location;*
- *Use of materials hazardous to long term tree health;*
- *Installation of service trenches / routes.*

1.2 Tree Protection Measures

Tree Protection Fencing

1.2.1 The trees designated for retention are to be retained and protected with tree protection fencing in accordance with 'BS5837: 2012 Trees in Relation to Design, Demolition and Construction – Recommendations'. Refer to *RCo339-02 / Tree Protection Drawing* for the proposed tree protection fencing locations.

Temporary Ground Protection

1.2.2 During the construction of the residential development, designated areas [as shown on *RCo339-02 / Tree Protection Drawing*] are to be protected with 150mm [min] depth of Type 03 permeable aggregate laid over a geo-textile. Existing soft estate levels are to be maintained. The permeable aggregate is to be installed and removed by hand (refer to Table 01].

No Dig Construction

1.2.3 The designated area as shown within RCo339-02 / Tree Protection Drawing is to be constructed with a 'No Dig' permeable surface construction. Excavation to be limited to the removal of loose surface material / herb layer and carried out with a manual excavation method only with all existing ground levels to be maintained. The designated area is to be protected with geocell tree protection cellular confinement system with Type 03 aggregate [permeable installed as per manufacturers guidelines. Wearing surface and any additional sub-base to be permeable.

Proposed Site Compound and Site Access

1.2.4 The proposed site compound [parking / site cabins / construction material storage area will be located outwith of any designated TRP areas. All access routes are to be clearly marked and outwith of any designated TRP areas.

Hazardous Materials

1.2.5 All hazardous materials should be strictly controlled to prevent accidental spillage thus ensuring the risk of damage to existing tree root systems is minimised.

Inspections

1.2.6 An appointed arboriculture consultant is to inspect the tree protection measures prior to any construction activities and to oversee all activities which may be damaging to the existing trees [below ground excavations within designated TRP areas for drainage / hard surfacing]. Any pruning works and temporary removal / reconfiguring of the temporary fencing will be approved by the arboriculture consultant in advance.

2.0 METHOD STATEMENT

2.1 Phasing of Operations

2.1.1 All the measures described in this section are intended to ensure the protection of existing trees during the construction of the proposed development. All construction personnel, including sub-contractors and delivery drivers should be made aware of the elements within this report. (Refer to *RCo339-02 / Tree Protection Drawing* and the accompanying *Tree Schedule*).

Phasing of Tree Protection Measures

2.1.2 The phasing of the tree protection measures are to be as follows;

- *Phase 01– Removal of designated shrubs and trees and preliminary crown pruning: Refer to RCo339-02 / Tree Protection Drawing & RCo339 / Tree Schedule];*
- *Phase 02– Installation of Tree Protection Fencing / temporary & permanent ground protection;*
- *Phase 03 – Construction Phase;*

- *Phase 04 - Removal of Tree Protection Fencing following the completion of construction activities;*
- *Phase 05 – Landscaping and associated works.*

Tree Removal (Phase 01)

2.1.3 The trees and shrubs to be removed are indicated on *RCo339-02 / Tree Protection Drawing]*. All tree / shrub works to be carried out prior to the erection of tree protection fencing / construction site activities and great care should be taken to avoid any damage to existing trees / shrubs which are scheduled to be retained. Trees and shrubs should not be felled during the bird nesting season (normally considered to be 1st March – 31st July however depending on seasonal temperatures, some birds may continue breeding into August and September).

2.1.4 Stumps are to be removed and cut away so that the top of the stump is at least 450mm below the final topsoil level in order that the site can be made good in accordance with the existing site levels. Where the depth is greater than 450 mm the areas are to be backfilled with topsoil to the required level.

2.1.5 Stumps within existing RPAs of trees to be retained are to be ground out by a pedestrian stump grinder as per the recommendations within *BS:5837 Section 8.8.2.3*]. Great care must be taken to avoid damage to adjacent trees to be retained.

2.1.6 The removal of shrub vegetation within the existing tree root protection areas is be undertaken by a manual method utilising hand tools only to minimise potential damage to the tree roots / tree architecture. Adjacent trees are not to be used as anchors or levers to assist in the removal of vegetation.

Temporary Tree Protection Fencing Installation (Phase 02)

2.1.7 Trees scheduled to be retained within the development site are to be protected with tree protection fencing as detailed on *RCo339-02 / Tree Protection Drawing]* and in accordance with the guidance laid out within *BS5837-2012: Trees in Relation to Design, Demolition and Construction – Recommendations.* The fencing and temporary/permanent ground protection are to be installed prior to any construction activities. The contractor is to be responsible for the installation, protection and maintenance of the tree protection fencing as well as the areas below the tree canopies and within the tree root protection areas.

2.1.8 The tree protection fencing is to be 2.0m height Herras welded wire mesh fencing positioned to the outside edge of the designated Tree Root Protection Areas as shown. Where possible the fencing should be temporarily fixed to appropriate fences, walls, knee rails etc. to provide a robust and completely protected area *(refer to Figures 1 and Figure 2, Section 5.0).* All tree protection fencing to be in accordance with *BS 5837-2012: 'Trees in Relation to Design, Demolition and Construction - Recommendations'* set out as specified within *RCo339-02 / Tree Protection Drawing].*

2.1.9 Day-Glo ribbons should be attached to the top of the fencing to ensure the fencing can be seen. The fencing should have all weather signs attached *(Refer to Figure 3 - Section 5.0 for example).*

2.1.10 All tree root protection fencing shall be maintained for the full construction period and inspected / approved prior to the commencement of any construction site activities by a suitably qualified arboriculturist. If the tree root protection fencing requires repositioning during the course of the construction programme, prior notification and agreement must be sought by the contractor with the appointed arboriculture supervisor.

2.1.11 Within the designated tree root protection areas:

- *No vehicles / machinery are to be used;*
- *No materials / chemicals are to be stockpiled / stored;*
- *No excavation activities. Ground levels to be maintained;*
- *No fires are to be lit.*

2.1.12 Designated areas [as shown on *RCo339-02 / Tree Protection Drawing*] outwith of the fenced area but to have new hard surfacing are to be protected with 150mm [min] depth of Type 03 permeable aggregate laid over a geo-textile to prevent compaction of below ground soils and impacts to retained trees. Existing soft estate levels are to be maintained. The permeable aggregate is to be laid and removed [prior to installation of new hard surfacing] by hand with manual tools only (refer to Table 01].

No Dig Construction

2.1.13 The designated area as shown within RCo339-02 / Tree Protection Drawing is to be constructed with a 'No Dig' permeable surface construction. Excavation to be limited to the removal of loose surface material / herb layer and carried out with a manual excavation method only with all existing ground levels to be maintained. The designated area is to be protected with geocell tree protection cellular confinement system with Type 03 aggregate [permeable installed as per manufacturers guidelines], depth to be advised by civil engineer. Wearing surface and any additional sub-base to be permeable. The installation of the No Dig Construction is to be supervised and monitored by the appointed arboriculture consultant.

Construction (Phase 03)

2.1.14 All fencing is to be maintained for the entire duration of the main construction phase.

Manual Dig

2.1.15 Any areas of proposed retaining structures, hard surfacing and / or drainage trenching requiring excavation within a designated TRP areas are to be undertaken by manual excavation with hand tools only to a minimum depth of 600mm below

existing ground levels – the appointed arboriculture supervisor is to supervise and monitor all excavations within designated TRP areas.

Temporary Tree Protection Fencing Removal (Phase 04)

2.1.16 At the end of the contract period the contractor shall remove all protective fencing from the development site. All existing vegetation is to be healthy and thriving at handover.

2.1.17 All site operations and construction activities will be conducted with due regard for the protection and long-term viability of the existing trees and vegetation which are to be retained according to the guidelines laid out within *BS5837: 2012 Trees in Relation to Demolition, Design and Construction – Recommendations.*

2.2 Tree Surgery

2.2.1 Any significant tree defects discovered during the scheduled tree works are to be reported to the project Landscape Architect / Arboriculture Consultant. All scheduled and arising tree work (including tree removal) will be undertaken by an approved and appropriately qualified tree surgeon in accordance with BS 3998: 2010 *Tree Work: Recommendations* and approved in advance with the arboriculture consultant. Branches in confined spaces to be removed and taken down in sections and all arisings are to be transported and disposed of away from site unless advised otherwise.

2.3 Retained Trees and Vegetation

2.3.1 Where construction works are to be carried out below tree canopies and / or within tree root protection areas, the contractor is to exercise extreme caution in order to avoid any damage to the existing tree roots and / or tree architecture.

2.4 Manual Excavation

Generally

2.4.1 Any regrading of existing ground levels should, wherever possible be limited to areas out-with tree root protection areas. Where existing ground levels are to be regraded within tree root protection areas, any excavation should be undertaken manually and with hand tools only. Individual tree roots and root clumps measuring >25mm must not be severed without seeking specialist arboriculture advice.

2.4.2 Roots measuring <25mm may be cleanly severed using specialist hand tools only and to the absolute minimum extent. Any roots which are exposed should be immediately covered with hessian sacking and backfilled with existing topsoil or appropriate granular fill (non-injurious to tree roots) as soon as possible in order to minimise and limit drying and desiccation. Any / all proposed excavation within

designated TRP areas is to be approved and supervised by an appointed arboriculture consultant.

2.5 Proposed Permanent Fencing

2.5.1 All proposed fence posts within designated Tree Root Protection Areas are to be installed by hand digging with manual tools only. No machinery and no tracked vehicles are to be used within designated Tree Root Protection areas.

2.6 Service Routes / Trenches

2.6.1 Wherever possible proposed service routes (cables, pipes, service runs etc) should be located outwith of tree root protection areas. Where site constraints dictate this is not possible, the service route should be designed so as to minimise the impact to the existing tree root protection area ie routed in the most direct route to and from the exterior of the radius root protection area and minimising the length of the run. Service trenches within tree root protection areas should be excavated using a manual dig method with hand tools only and routed through tree roots via a ducting sleeve. Service runs should, wherever possible be combined in order to minimise the impact on existing tree roots and not within 1.0m of the tree trunk.

2.6.2 Individual tree roots and root clumps measuring >25mm must not be severed without seeking specialist arboriculture advice. Roots measuring <25mm may be severed using specialist hand tools only and to the absolute minimum extent to allow the facilitation of the service route - wherever possible tree roots must be left intact in order to ensure the long term viability of the tree root system. Exposed routes should be immediately wrapped in dry hessian sacking or coconut matting in order to prevent drying and as a temporary measure can be surrounded with a loose granular fill prior to backfilling with the excavated topsoil. Tree roots >25mm, which are not required to be severed, may be carefully retained and protected with washed sharp sand, prior to backfilling with topsoil.

2.6.3 In some instances, trenchless insertion methods may be employed in order to facilitate service runs through root protection areas. In such cases the entry and retrieval pits should be located outside of the designated root protection areas and the run should be located below 750mm from the existing ground level in order to limit the potential damage to existing tree roots.

2.6.4 All proposed service runs within designated tree root protection areas are to be approved by the project arboriculture consultant / HDC Tree Officer prior to any works on site. All excavations within designated TRP areas are to be supervised by the appointed arboriculture consultant.

2.7 Lifting of Existing Hard Surfaced Areas

2.7.1 The removal of any existing hard surface layer within the tree root protection areas should be undertaken taking care to ensure the existing tree roots remain undamaged. Any operations should be undertaken manually and with hand tools (suitable machinery may be used in consultation with the landscape architect) and should be accomplished by working backwards to ensure the resulting, exposed ground is not compacted.

2.8 Demolition of Structures

2.8.1 Trees close to structures which are scheduled to be demolished within RPAs should be selectively pruned (tying back branches to achieve a clear working space should also be considered as an alternative) in order to prevent accidental damage. Movement of machinery should be restricted to areas outside of the RPA, areas with ground protection or from within the existing building footprint. Where trees are in close proximity to structures they should be demolished using a *'top down pull back'* method. Any below ground structures within existing Tree RPAs (eg foundations) should be left in situ to prevent accidental damage to tree roots.

2.9 Herbicides

2.9.1 Any herbicides which are to be used within the vicinity of existing trees and particularly within designated RPAs should be an appropriate product for the vegetation which is intended to be removed and all instructions and guidance from the manufacturers are to be strictly observed. The following guidance / legislation may be pertinent;

- *Control of Pesticides Regulations 1986;*
- *The Control of Pesticides Regulations (Amended 2012);*
- *Control of Substances Hazardous to Health Regulations 1994;*
- *HSE Publication 257 (2013);*
- *Pesticides Safety Directive (www.pesticides.gov.uk).*

2.10 General Notes

2.10.1 The guidance and principles within *BS5837: 2012 - Trees in Relation to Design, Demolition and Construction – Recommendations* are to be followed at all times to prevent undue damage and / or stress on the tree root systems of trees within and adjacent to the proposed development site.

2.10.2 The integrity of the existing soil structures are fundamental to the long term health and viability of trees and therefore soil compaction, excavation and contamination

is to be avoided at all times within the RPAs. Great care is to be taken to avoid damage to tree roots, stems, boles, branches and canopies.

2.10.3 All tree protection measures are to be carried out on site in accordance with the approved drawing and schedule.

3.0 FIGURES

Figure 01. Tree Protective Fencing. Default specification for protective barrier [Not to be used within designated TRP Zones]
(© The British Standards Institution 2012)

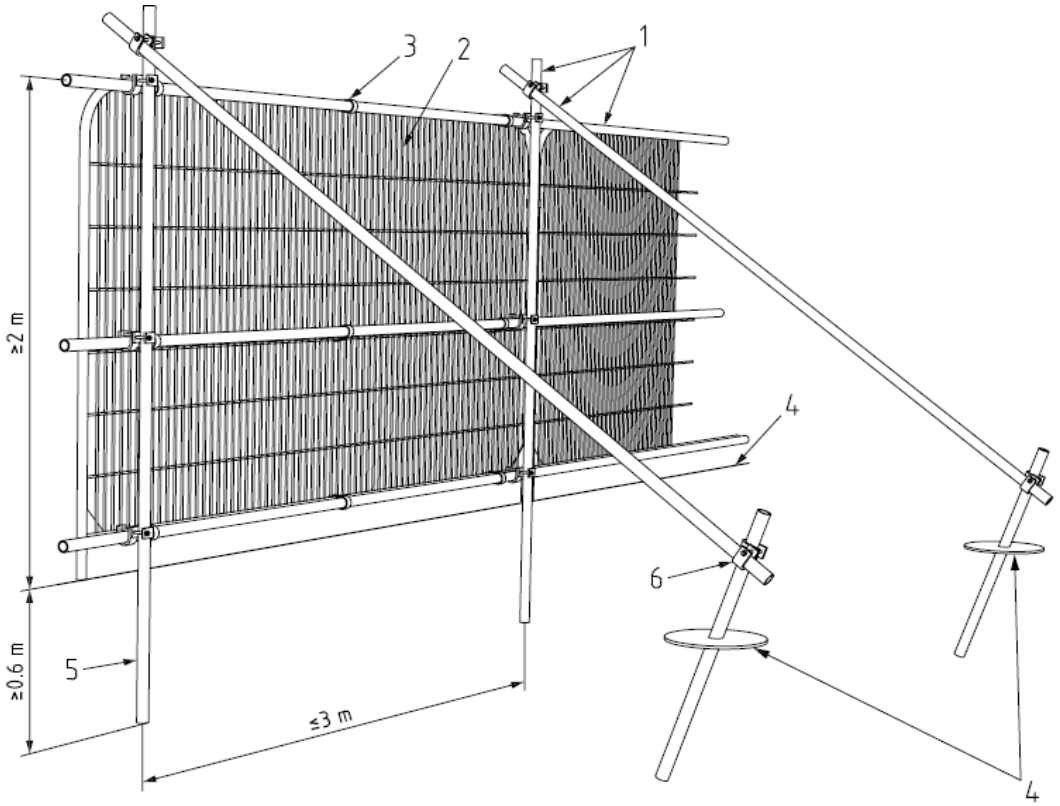

Key

1 Standard scaffold poles
2 Heavy gauge 2 m tall galvanized tube and welded mesh infill panels
3 Panels secured to uprights and cross-members with wire ties
4 Ground level
5 Uprights driven into the ground until secure (minimum depth 0.6 m)
6 Standard scaffold clamps

Figure 02. Tree Protective Fencing Support - Alternative support specification for protective barrier.
(© The British Standards Institution 2012)

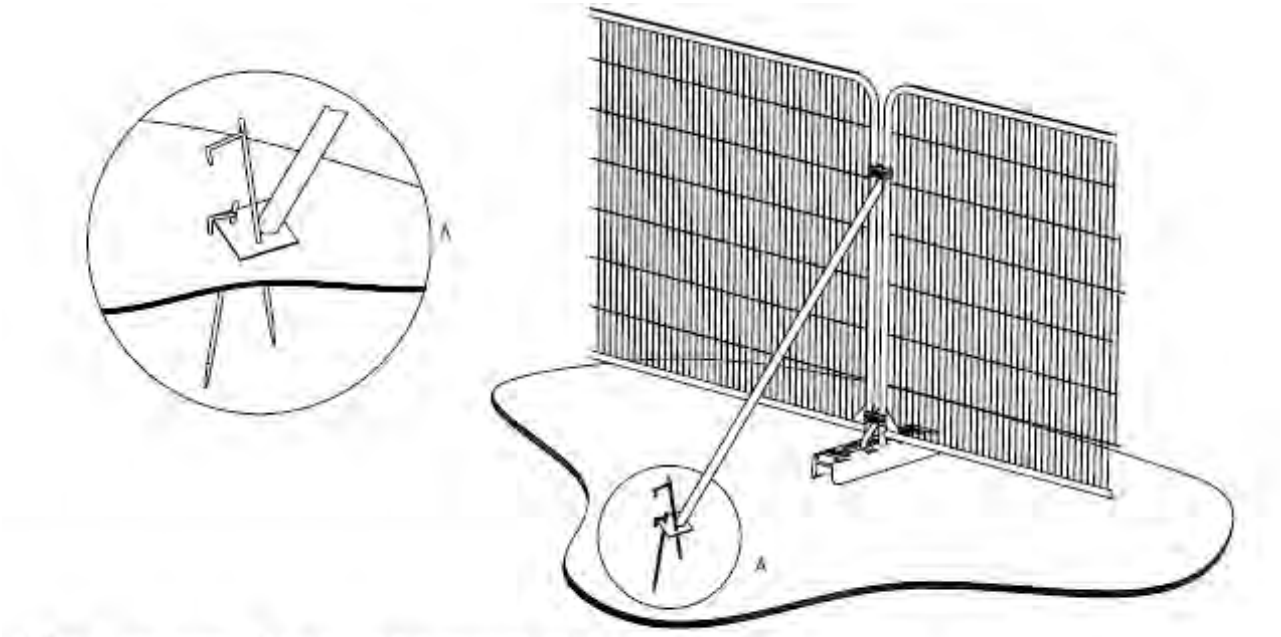

a) Stabilizer strut with base plate secured with ground pins

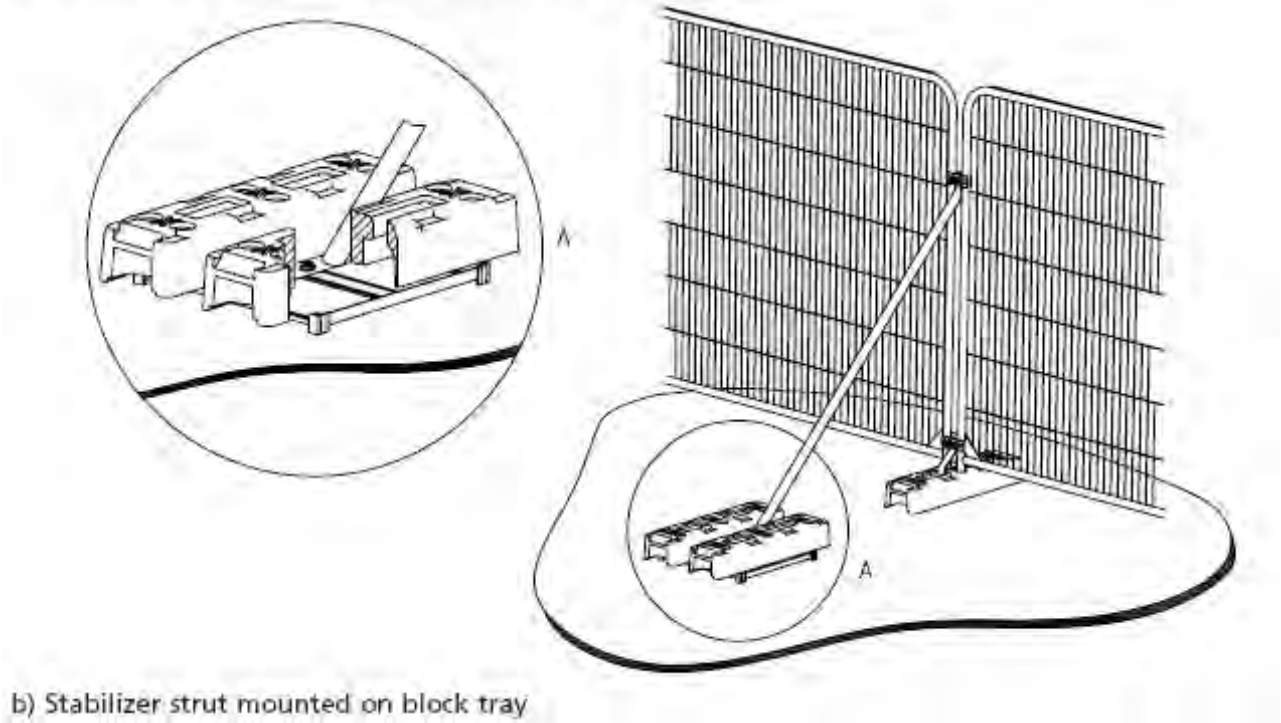

b) Stabilizer strut mounted on block tray

Figure 03. Tree Protection Fencing - Signage

