DO NOT SCALE

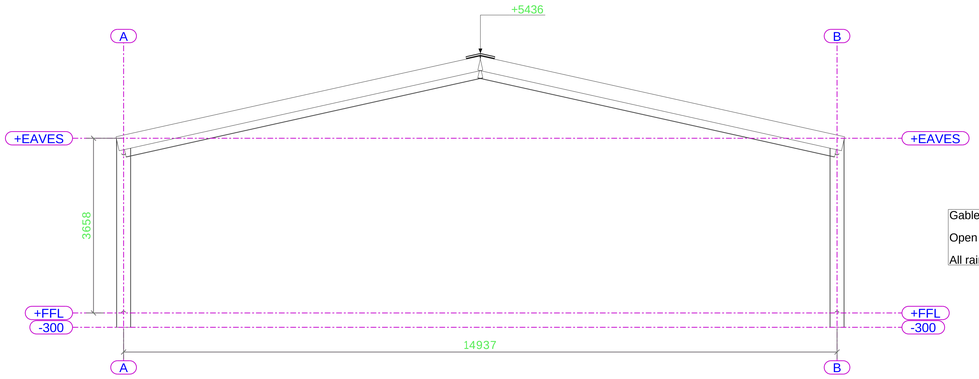

Elevation on Line 1
Scale 1 : 40 @ A0

Gable Views :

Open gable, Bargeboard only.

All rainwater i.e. Grey PVC Gutters and Grey PVC Downpipes.

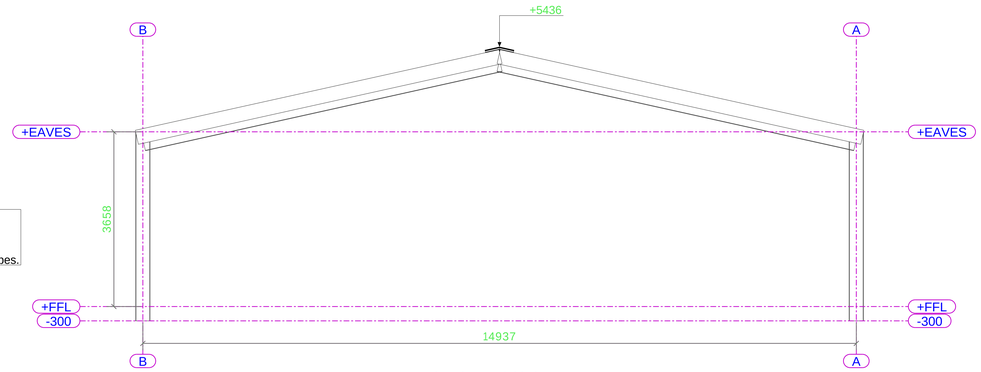

Elevation on Grid Line 4
Scale 1 : 40 @ A0

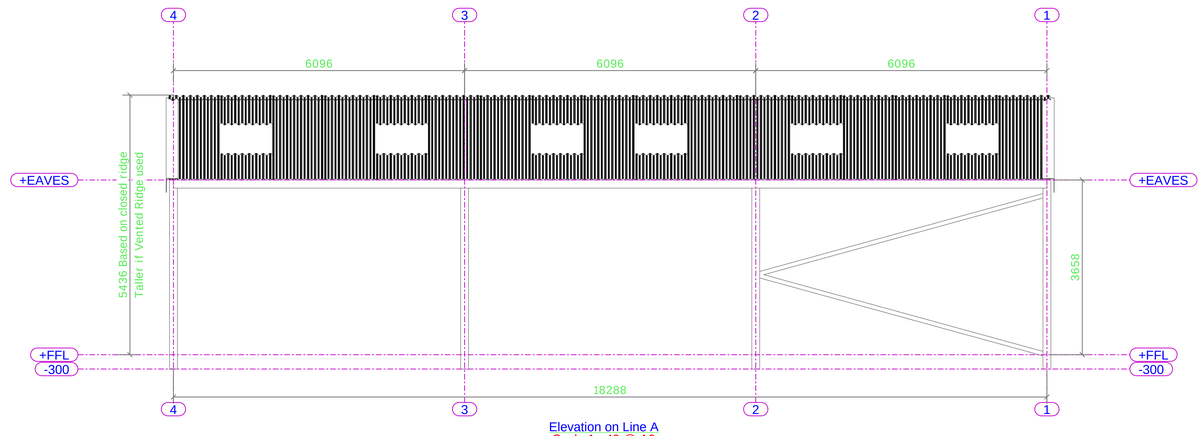

Elevation on Line A
Scale 1 : 40 @ A0

Side Views:

Diagonal Side bracing has been allowed for within the design.
(If Portal bracing is required, this can be supplied at addtional cost)

Side cladding and side rails not required.

Natural Grey P6R Fibre Cement with Either Vented, Alternate Vented or Closed Ridge.
(Close Ridge displayed)

12No. 9ft 6ins 8oz SAB Class 3 rooflights with Red caps as per health and safety requirements.

All rainwater i.e. Grey PVC Gutters and Grey PVC Downpipes.

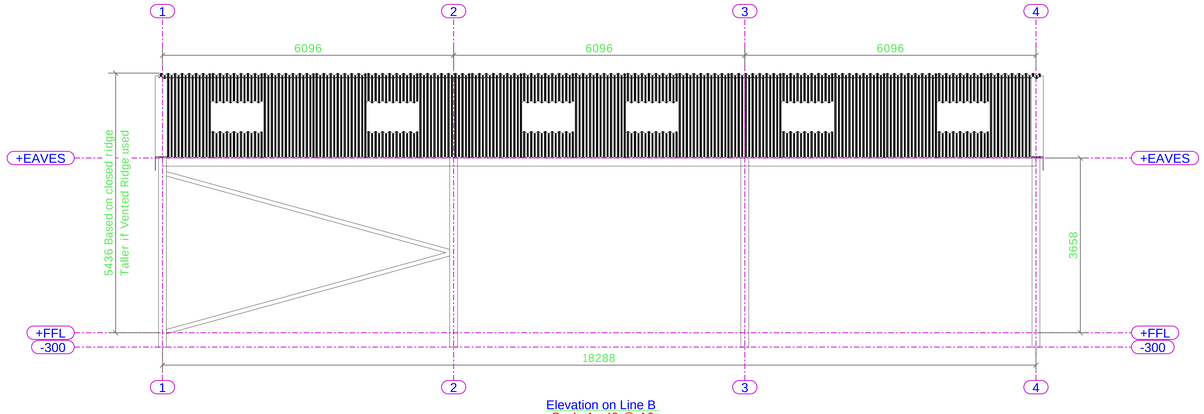

Elevation on Line B
Scale 1 : 40 @ A0



Scale Bar
Scale 1 : 40 @ A0

FOR APPROVAL

REV MARK	REVISION DESCRIPTION	REVISION DATE

Shufflebottom Ltd
Cross Hands Business Park
Cross Hands
Llanelli, Carmarthenshire
SA14 6RE - Tel: 01269 831831

DRAWING TITLE	Gable & Side Elevations		
CONTRACT	HARVIE		
MODELLED BY	DEPMO	ISSUE DATE	08.04.2025
CONTRACT NO	D15128	SCALE	1:40
DRAWING No	G [2]	REVISION No.	