

origin

DOORS AND WINDOWS

# Residential Door Specification Guide

# Specification Overview

Thermally Broken Aluminium Residential Door

## External view of the Origin Residential Door (open in)



## Internal view of the Origin Residential Door (open in)



## Profile Specification

| | |
|---|---|
| Outer Frame Depth | 75mm |
| Sash Depth | 59mm |
| Weathered Threshold Height | 67mm |
| Non-weathered Threshold Height | 50mm |
| Mobility Threshold Height | 20mm |

## Features

- Up to a 20-year guarante[1]
- 3-Star Diamond Cylinder as standard
- Chamfered bead internally and externally
- Packaged in kit form for easy transportation and installation
- 5-point automatic lock or 8 multi-point lock system available
- Secured by Design accredited
- Available in 10 different panels
- The 28mm panel is manufactured with aluminium inner and outer layers and has a highly efficient Thermimax core

## Options and extras

- Available in single and French door configurations
- Can be used as a front door, garage door or on a utility room/ side exit
- When being used as a garage door, it can be specified with no threshold
- Weathered, non-weathered or mobility (Class 4A) thresholds are available
- Open-in or open-out options
- Cill options available: 95, 155, 180 and 225mm (see page 49)
- Available in over 150 different colours, with different colours able to be selected on the panel, sash and frame
- Gasket colours: black, white, light grey, graphite grey, light oak bronze or chestnut brown
- Hinge colours: black, white, stainless steel finish or colour coded
- Door-to-window coupling available
- 2500EA, 4000EA and 5000EA trickle vents available
- Trickle vents available
- Marine finish option
- Midrail available
- Glazing bars available
- Weather bar - can be fitted to the bottom of open-in Single and French doors to improve water ingress

*1 - Guarantee based on location of where the doors will be installed.*
*Full terms and conditions can be found on the Origin website - origin-global.com/terms-and-conditions.*

*2 - Size restrictions apply.*

## Kensington Range....


SE 04


SE 07


TR 02


CO 01


GE 01

1-week lead time available on our popular panels and finishes

Size limitations apply.

## Popular finishes


Black Grey (7021M)


Slate Grey (7015M)


Hipca White (9910G)


Anthracite Grey (7016M)


Jet Black (9005M)


9910G in/ 7016M out


Dark Silver Metallic (9007M)

DUAL COLOUR OPTION

ANY RAL COLOUR

Alternatively, dual coloured or any RAL coloured door can be selected on a 5-week lead time.

For the full range of colours and most up to date lead times, visit origin-global.com

## Lead Times

Popular colour doors: 1-week

Special colour doors: 5-weeks

Dual colour doors: 5-weeks

**This panel is only available as a single door on the 1-week lead time. If required as a French door, it will be on a 5-week lead time.*

# Security

## Origin's Multi-Point Lock

The Origin Residential Door can be specified with the same high security 8-point locking system as used in the Origin Bi-fold Door

The multi-point lock was developed in-house by Origin and offers 8-points of locking. It conforms to all of the latest security standards including Document Q compliance, PAS 24:2016 and Secured by Design.

As an alternative to the 8-point locking system with a lever to lever handle, a 5-point automatic locking system is also available. This allows the user to simply shut the door and turn the key without the need to lift the handle first

*Find out more about SBD on page 106-107*

## Locking Cylinders

As standard, our Residential Doors come with a 3-Star Diamond cylinder. A thumbturn option is also available.

3-Star Diamond Cylinder



# Residential Door Make-Up

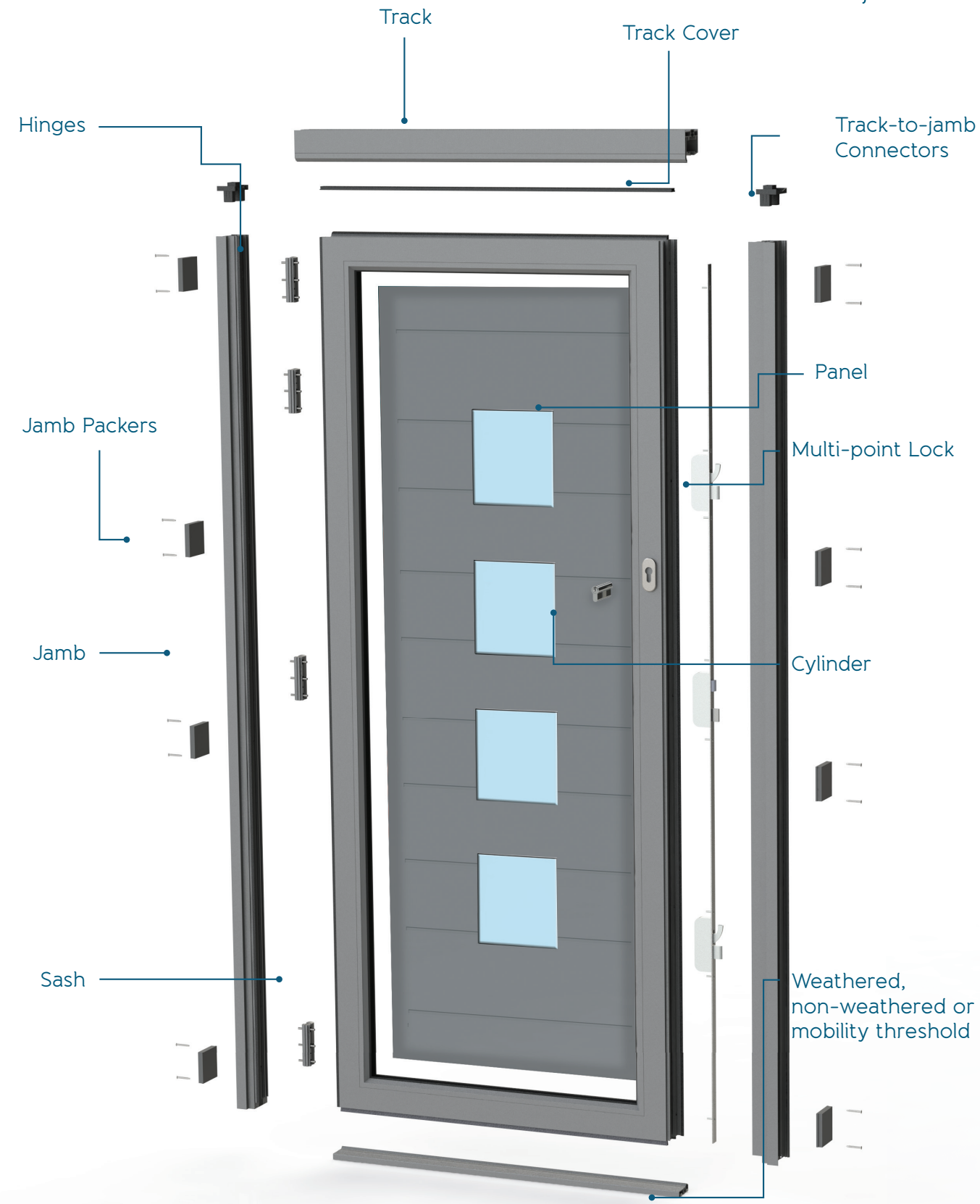


Panel shown is GE 01

# Panel Make-Up

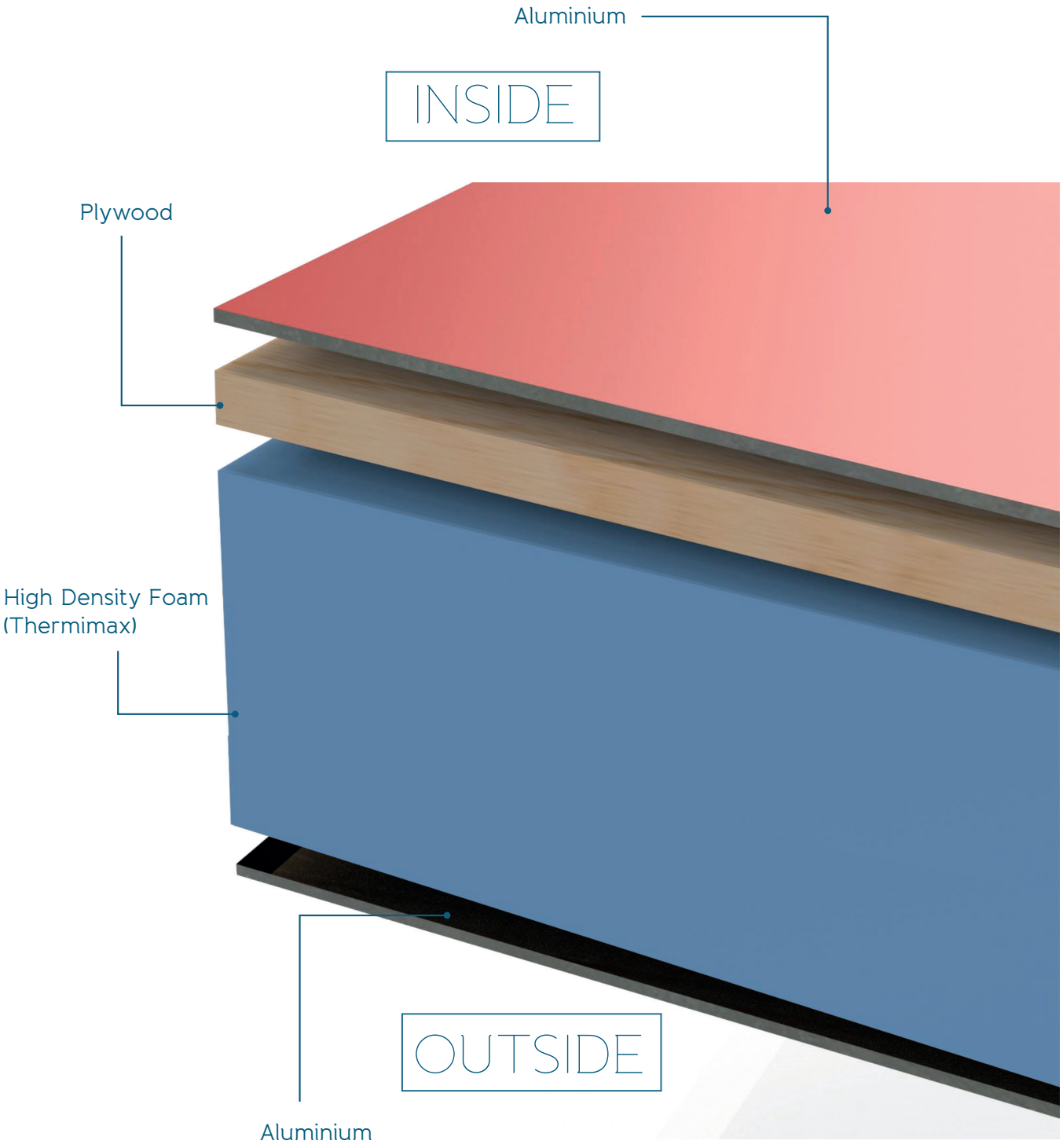

# Performance and Limitations

## Origin Thermal Ratings

| | U-Value |
|---|---|
| Origin Residential Door with Panel | 1.4 W/m²K● |

● Minimum value for compliance with Building Regulations Part L for replacements

## Weather Rating

| | |
|---|---|
| Air Permeability | Class 4 |
| Water Tightness | Class 8A |
| Resistance to Wind Load | Class A5 |
| Exposure Category | 2000 |

## Performance Testing

PAS 24:2016 Certified (Document Q Compliant)

BS 6375 Parts 1, 2 and 3 Certified

Secured by Design accredited

# Performance and Limitations

| Glazing | U-Value |
|---|---|
| 1.2 centre pane ● | 1.5 W/m²K |
| 1.1 centre pane ● | 1.4 W/m²K ● |
| 1.0 centre pane ● | 1.4 W/m²K ● |
| 0.9 centre pane ● | 1.3 W/m²K |
| 0.8 centre pane ● | 1.2 W/m²K |
| 0.6 centre pane ● | 1.2 W/m²K |

● Minimum value for compliance with Building Regulations Part L for replacements

● Argon Gas Fill

| Weather Rating | Doors up to 2500mm | Doors over 2500mm |
|---|---|---|
| Air Permeability | Class 4, 600pa | Class 3, 600pa |
| Resistance to Wind Load | Class A3, 1200pa | Class A2, 800pa |
| Water Tightness | Class 9A | Class 5A |

The figures shown in the table are for guidance purposes only. Resistance to wind load is dependent on the sash width. Please see OSS for more information.

## Performance Testing

PAS 24:2016

BS 6375 Parts 1, 2 & 3

Secured by Design accredited (up to 2500mm tall)

Passed 50,00 lead door cycles and 10,000 full cycles, equating to 25 years of use

## Building Regulation Requirements

| | |
|---|---|
| New Build Limiting Value | 1.6 W/m²K |
| Replacements | 1.4 W/m²K |
| Energy Rating | C or better |

All doors must conform to these requirements

## Thermal Efficiency

The Origin Residential Door exceeds British Building Regulation requirements for optimum thermal efficiency. With U-Values as low as 1.4, the Residential Door comprises of some of the most sophisticated weather-tight seals to ensure the elements stay out.



OB-72

# Certificate of PAS 24

| PRODUCT: | ORIGIN BI-FOLD OB-72 |
|---|---|

| SUMMARY OF TESTING PROCEDURE: | RESULT: |
|---|---|
| PAS 24: 2016 - CLAUSE ANNEX A, B4.3, B4.4.2, B4.4.3, B.4.4.4, B.4.5, B.4.6, B.4.8 AND B.4.9.2.2 | PASS |

PASSED PAS 24: 2016 FOR THE REQUIREMENTS OF BOTH 3 STAR KEY REMOVABLE AND THUMBTURN CYLINDERS.

TO COMPLY, A BSEN 356 P1A CERTIFIED GLASS UNIT MUST BE INSTALLED.

Secured by Design
SBD
Police Preferred Specification

TESTED BY: Build Check Ltd
REFERENCE: securedbydesign.com/member-companies/sbd-members
DATE: 01/08/2019

origin
DOORS AND WINDOWS

Email: enquiry@origin-global.com | Web: www.origin-global.com

Origin Global HQ, Stuart House, Castle Estate, Coronation Road, Cressex Business Park, High Wycombe, Buckinghamshire, HP12 3TA

OFDL_18.144.1



Residential Door

# Certificate of thermal simulation

| | |
|---|---|
| PRODUCT: | Origin Residential Door |
| SIM - SOFTWARE: | Physibel Building Physics Software - BISCO 2D |
| PANEL: | Origin Kensington or Sandringham Panel Range |
| INSULATION | Kay-Cel EPS Thermal Insert |

Thermal Transmittance (U- Value):
1.4 W/(m2K)

*All thermal simulations carried out in accordance with:*
*BS EN ISO 10077 - 2: 2017, Thermal Performance of windows, doors and shutters - calculation of thermal transmittance.*

TESTED BY: David Ginger (Product Compliance Director)
DATE: *May 2022*
SIGNED: D. Ginger

Email: enquiry@origin-global.com | Web: www.origin-global.com

Origin Global HQ, Stuart House, Castle Estate, Coronation Road, Cressex Business Park, High Wycombe, Buckinghamshire, HP12 3TA

OFDL_18.149.3

origin
DOORS AND WINDOWS

# Master Configurations

## Master Configuration: Single Door

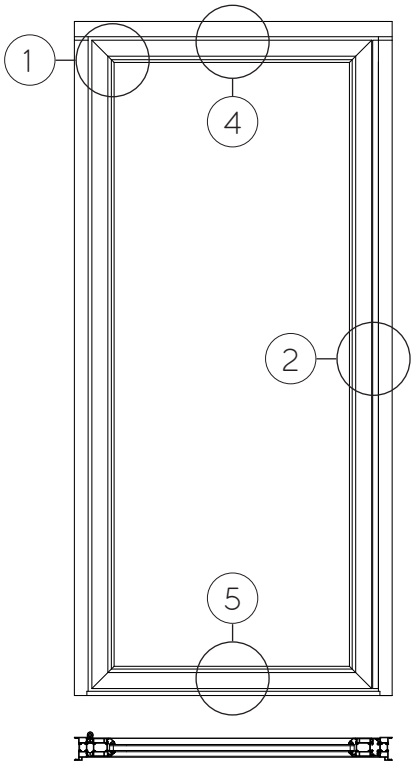


See Configuration Key for section detail

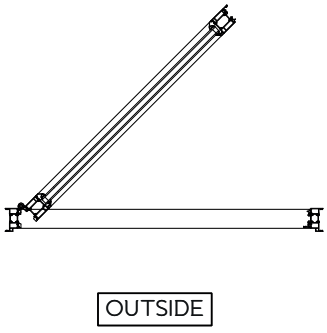


## Key features

- Multi-point locking system
- 4 security hinges for optimum security
- Can be specified to open in or out
- 10 panel styles

# Configuration Key

## 1 - Hinge Jamb Detail

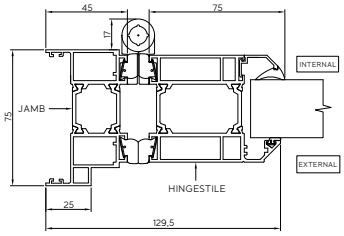


See page 37

## 2 - Locking Jamb Detail

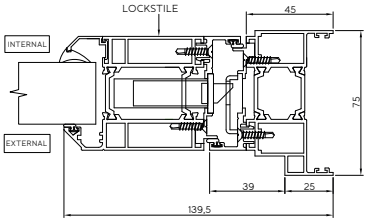


See page 38

## 4 - Top Track Detail

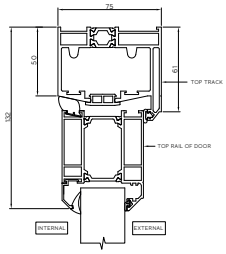


See page 40

## 5 - Mobility Threshold Detail

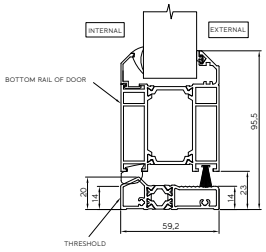


See page 41

## 5b - Weathered Threshold Detail

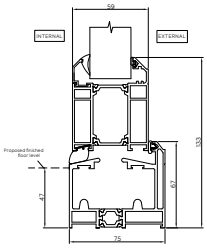


See page 42

## 5d - Non-Weathered Threshold Detail

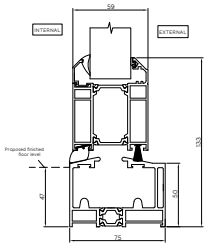


See page 45

# Master Configuration: Single Door with Mid-rail

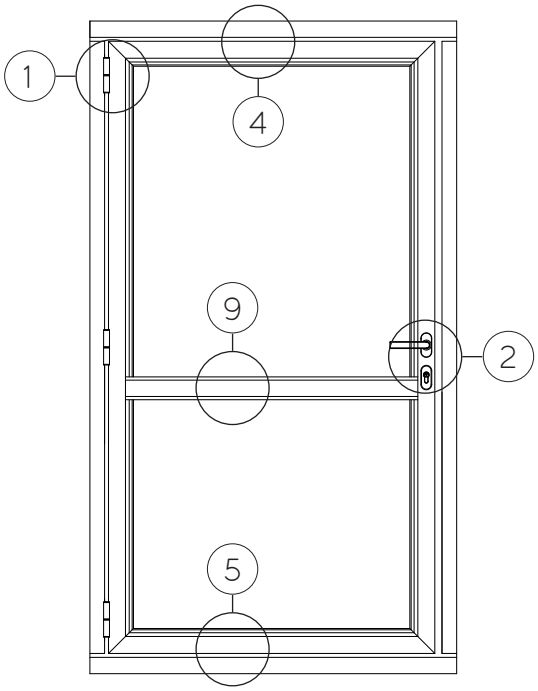


VIEWED EXTERNALLY



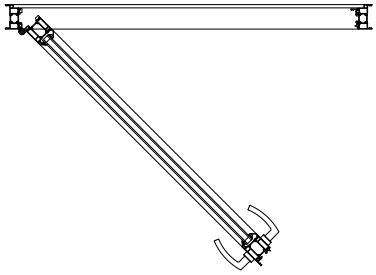

See Configuration Key for section detail

## Key features

- Origin 8-point locking system depending on height
- Is able to be used for an everyday access door

# Configuration Key

## 1 - Hinge Jamb Detail

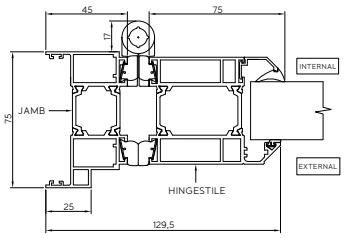


See page 37

## 2 - Locking Jamb Detail

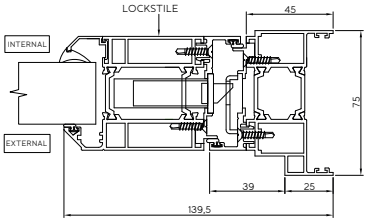


See page 38

## 4 - Top Track Detail

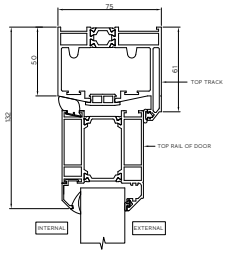


See page 40

## 5 - Mobility Threshold Detail

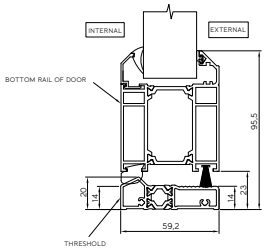


See page 41

## 5b - Weathered Threshold Detail

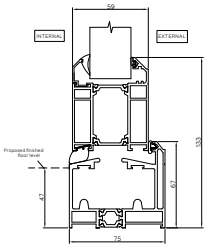


See page 42

## 5d - Non-Weathered Threshold Detail

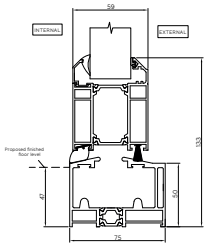


See page 45

## 9 - Mid-rail Detail

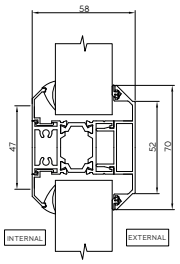


See page 51

# Master Configuration: French Door

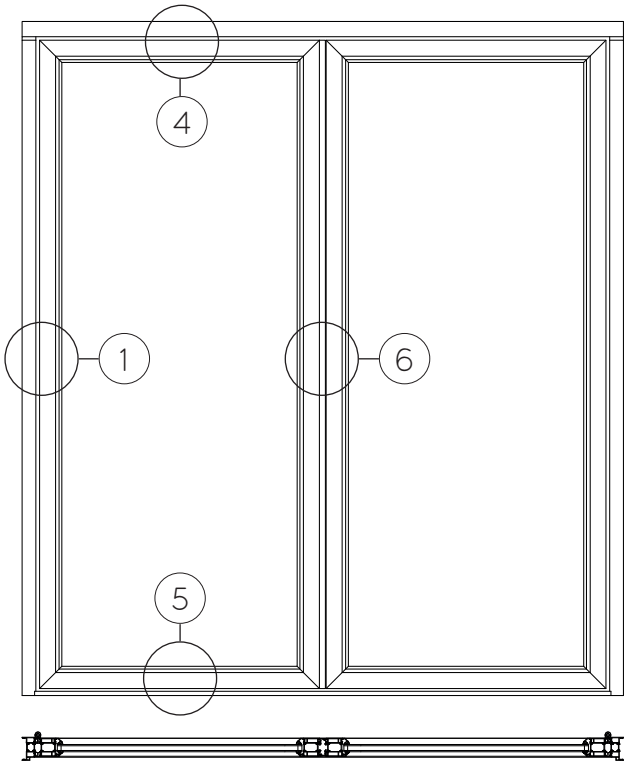


See Configuration Key for section detail

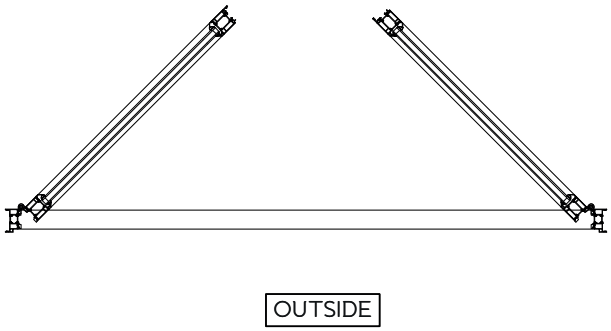


## Key features

- Multi-point locking system
- Works as a French or garage door
- Can be specified to open in or out
- When being used as a garage door, it can be specified to have no threshold

# Configuration Key

## 1 - Hinge Jamb Detail

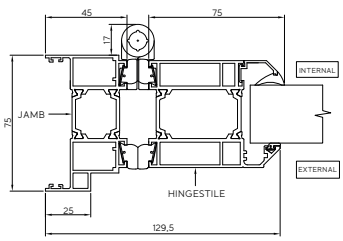


See page 37

## 4 - Top Track Detail

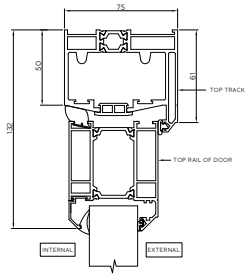


See page 40

## 5 - Mobility Threshold Detail

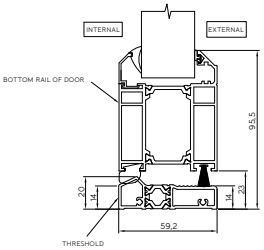


See page 41

## 5b - Weathered Threshold Detail

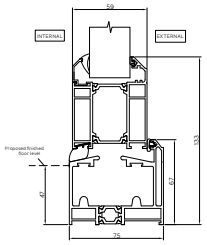


See page 43

## 5d - Non-Weathered Threshold Detail

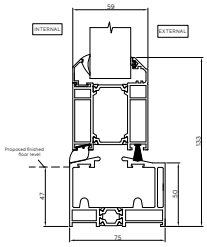


See page 45

## 5f - No Threshold Detail (garage doors only)

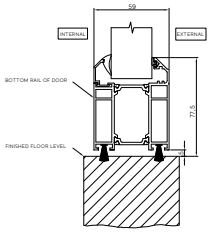


See page 47

## 6 - Locking Slave Detail

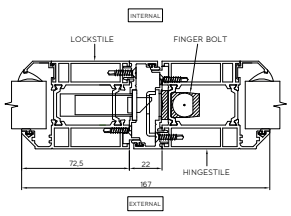


See page 48

# Master Configuration: Door-to-Sidelight

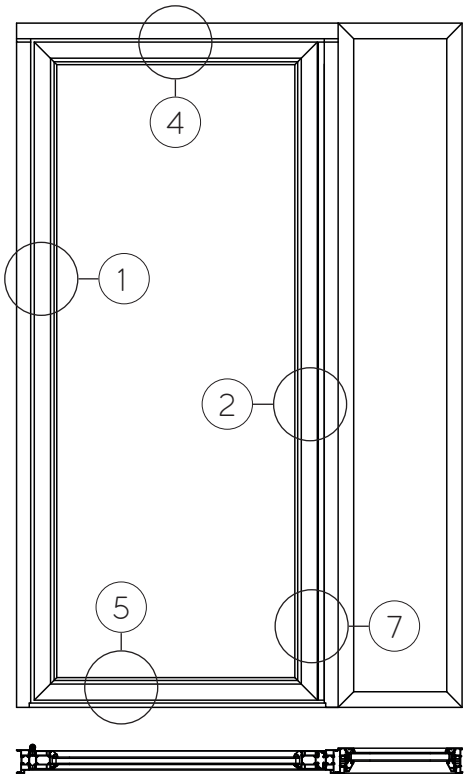


See Configuration Key for section detail

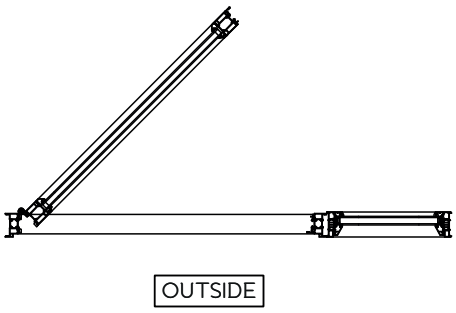


## Key features

- Multi-point locking system
- Door-to-window coupling
- Coupled windows can have 28mm, 32mm or 44mm glass units
- Matching decorative side panels available

# Configuration Key

## 1 - Hinge Jamb Detail

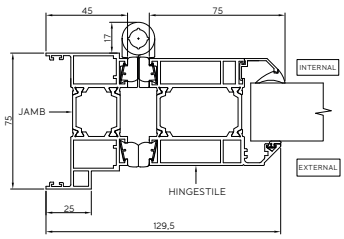


See page 37

## 2 - Locking Jamb Detail

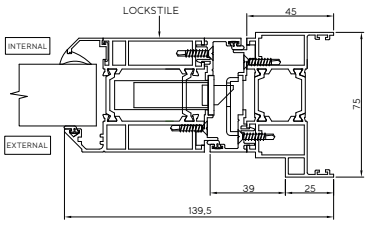


See page 38

## 4 - Top Track Detail

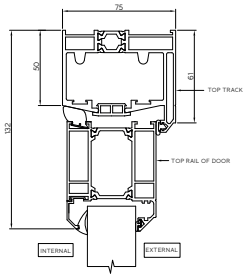


See page 40

## 5b - Weathered Threshold Detail

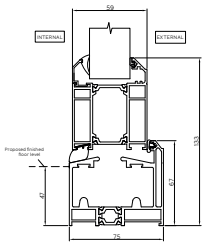


## 5d - Non-Weathered Threshold Detail

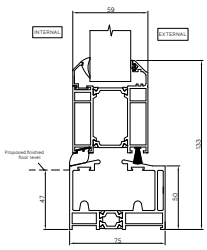


## 5f - No Threshold Detail (garage doors only)

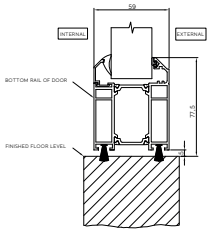


## 7 - Window-To-Door Jamb Coupler Detail

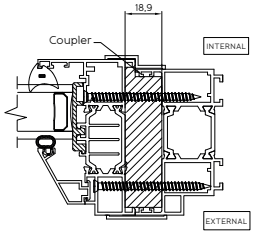


See page 49

# Master Configuration: Door-to-Transom

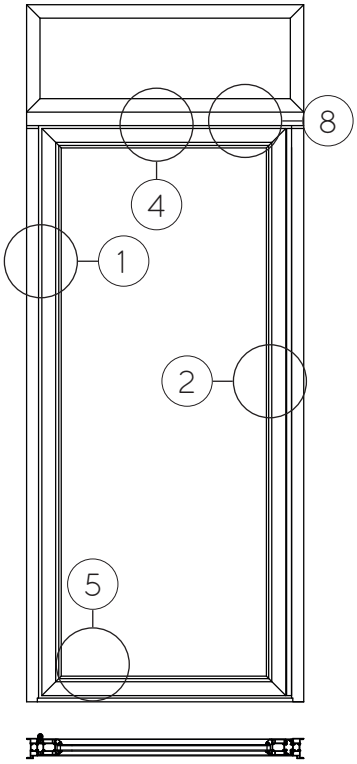


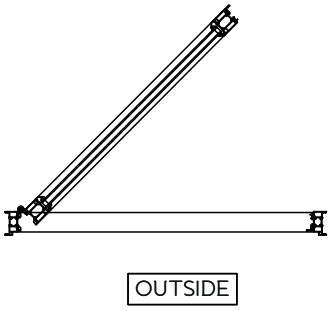


See Configuration Key for section detail

## Key features

- Multi-point locking system
- Door-to-window coupling
- Windows can be glazed with 28 and 44mm glass units
- Matching decorative side panels available

# Configuration Key

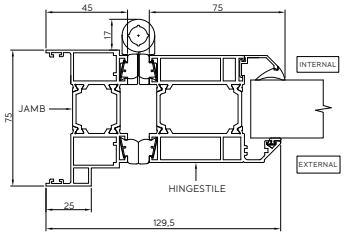


See page 37

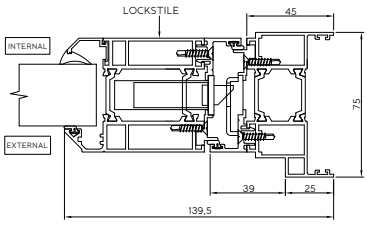


See page 38

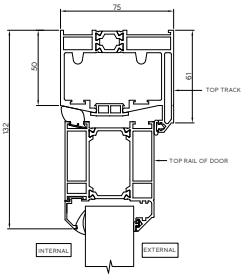


See page 40

## 5b - Weathered Threshold Detail

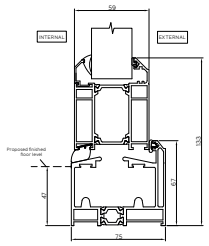


## 5d - Non-Weathered Threshold Detail

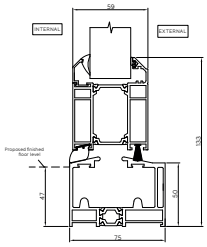


## 5f - No Threshold Detail (garage doors only)

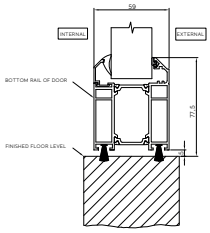


## 8 - Window-To-Track Coupler Detail

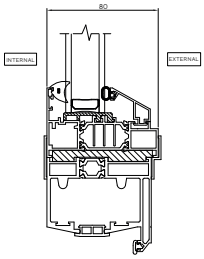


See page 50

# Technical Drawings

## 1 Hinge Jamb Detail

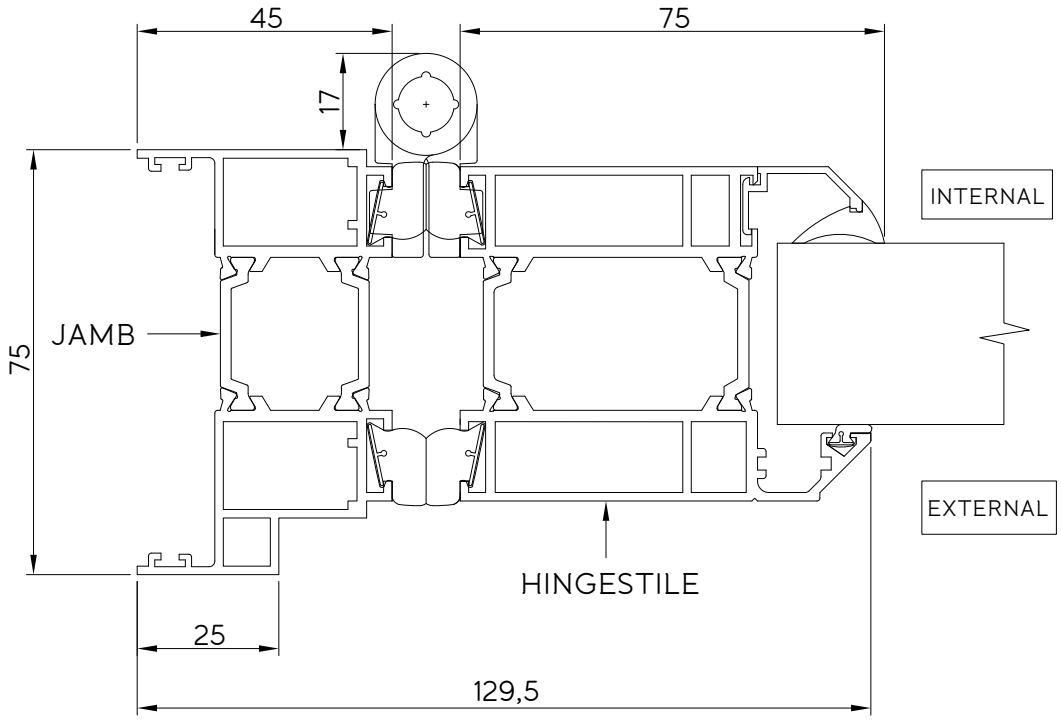


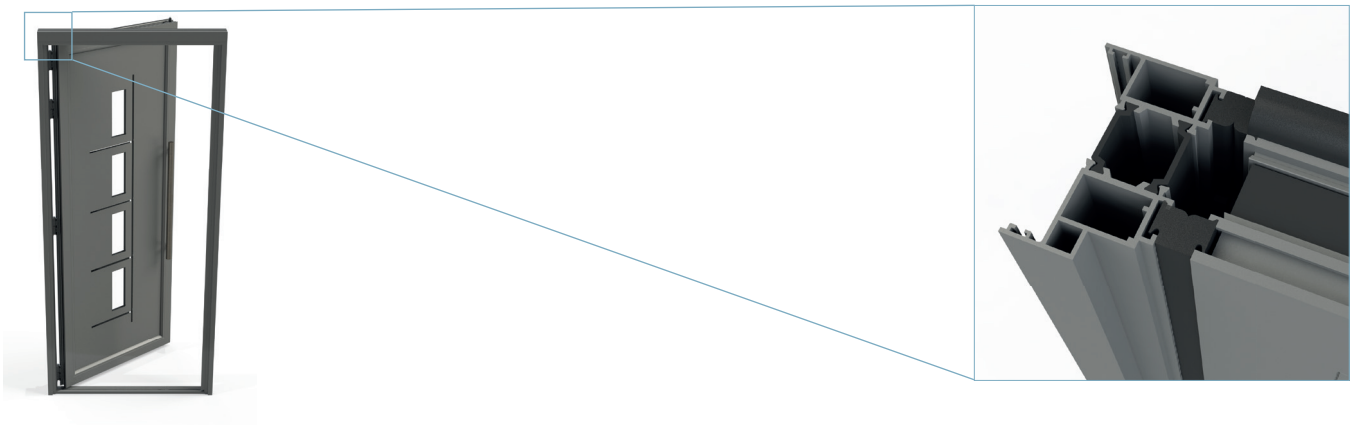

## 2 Locking Jamb Detail

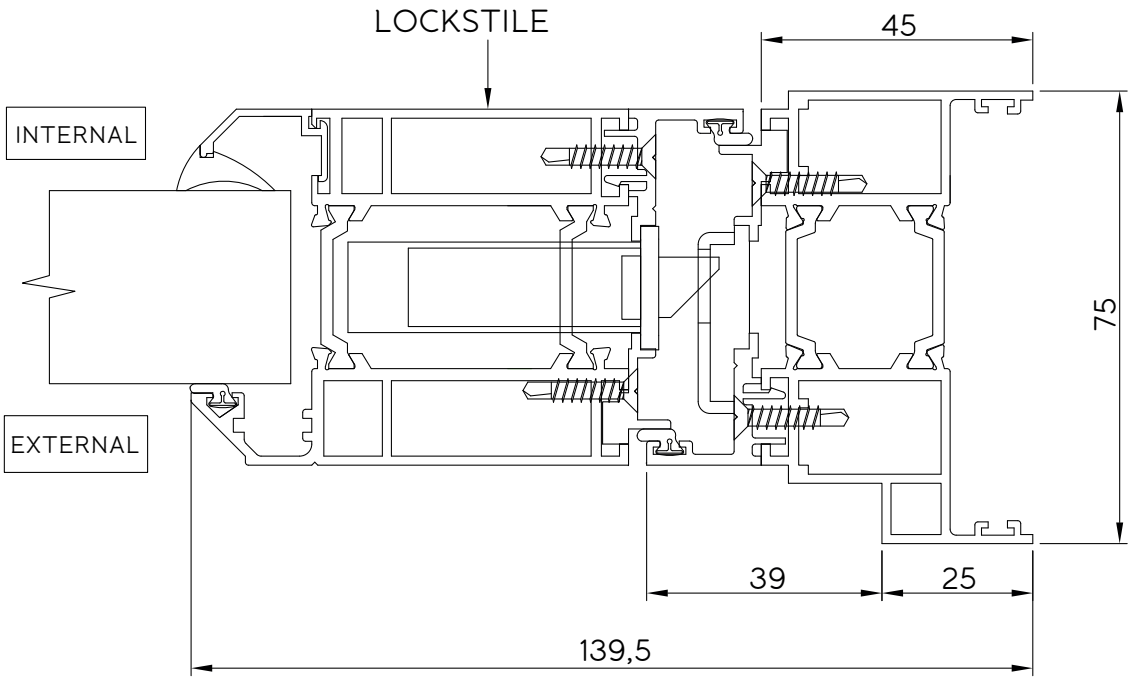


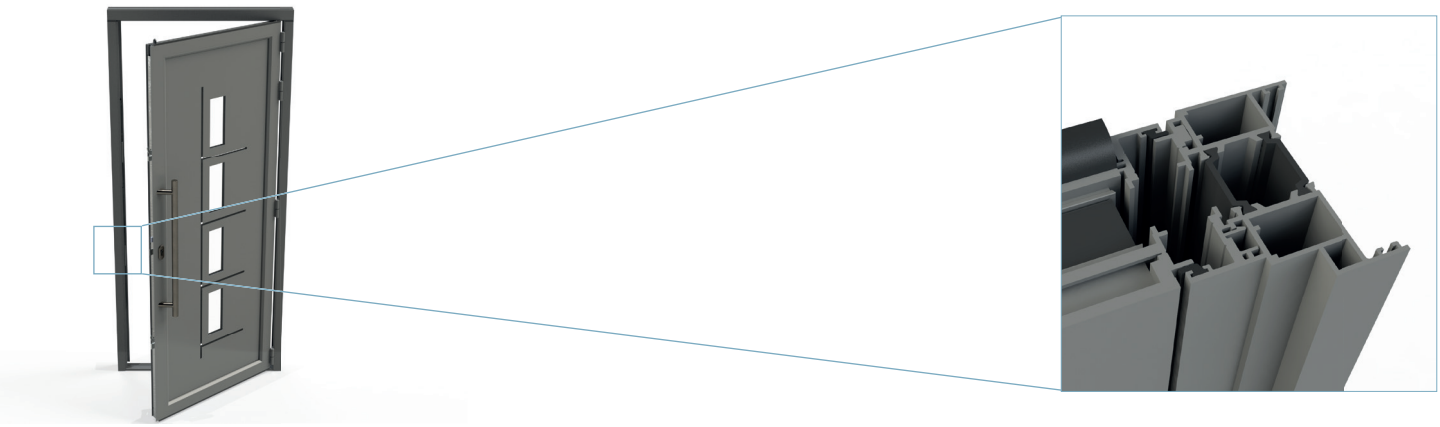

# 4 Top Track Detail

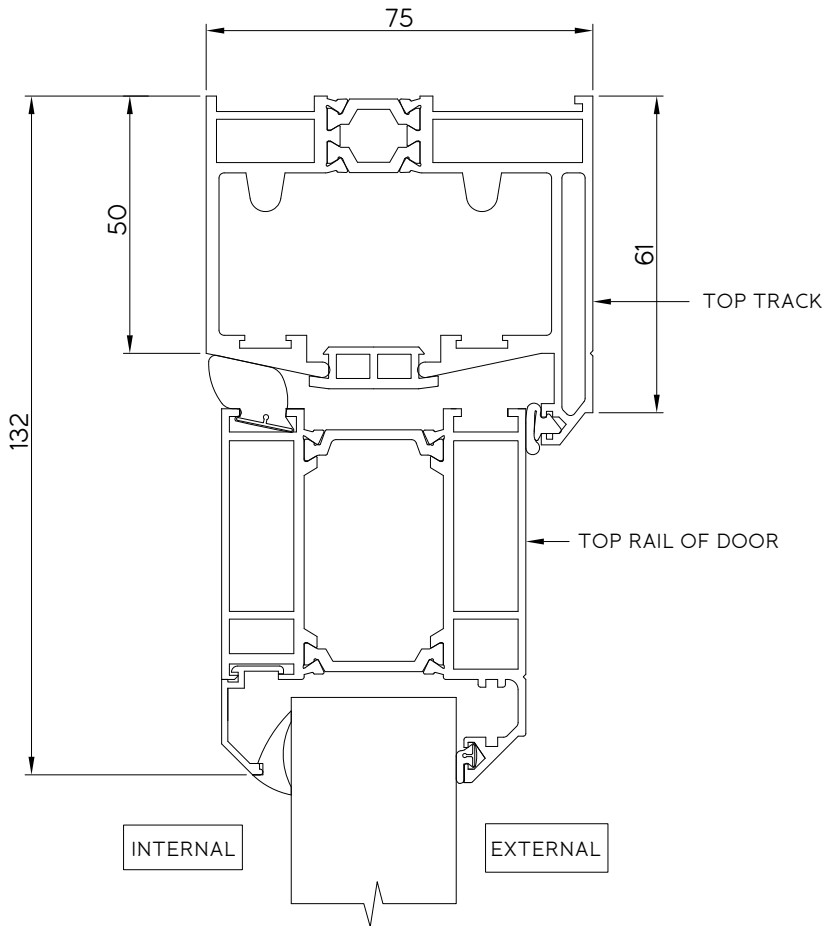


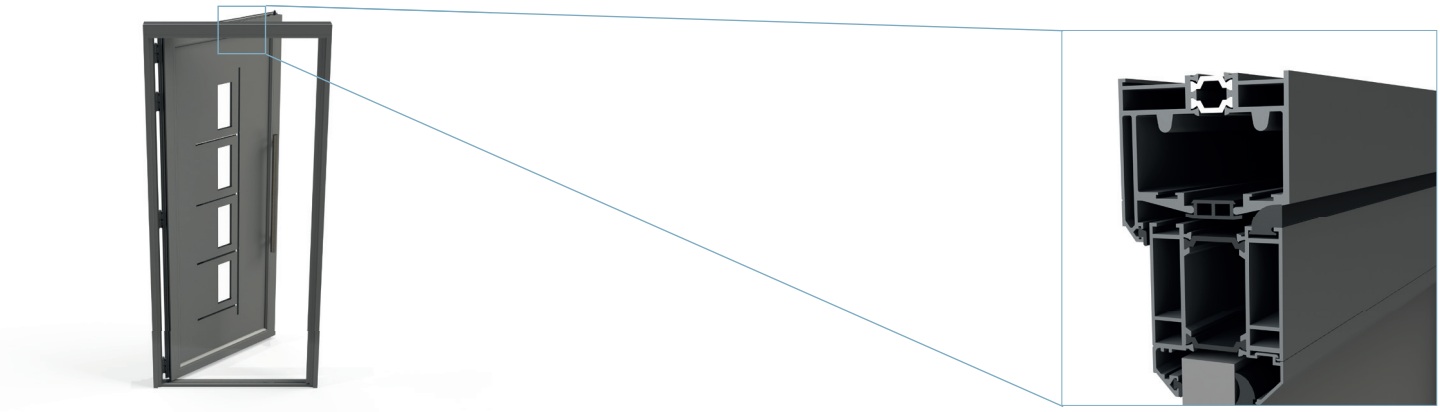

## 5 Mobility Threshold Detail

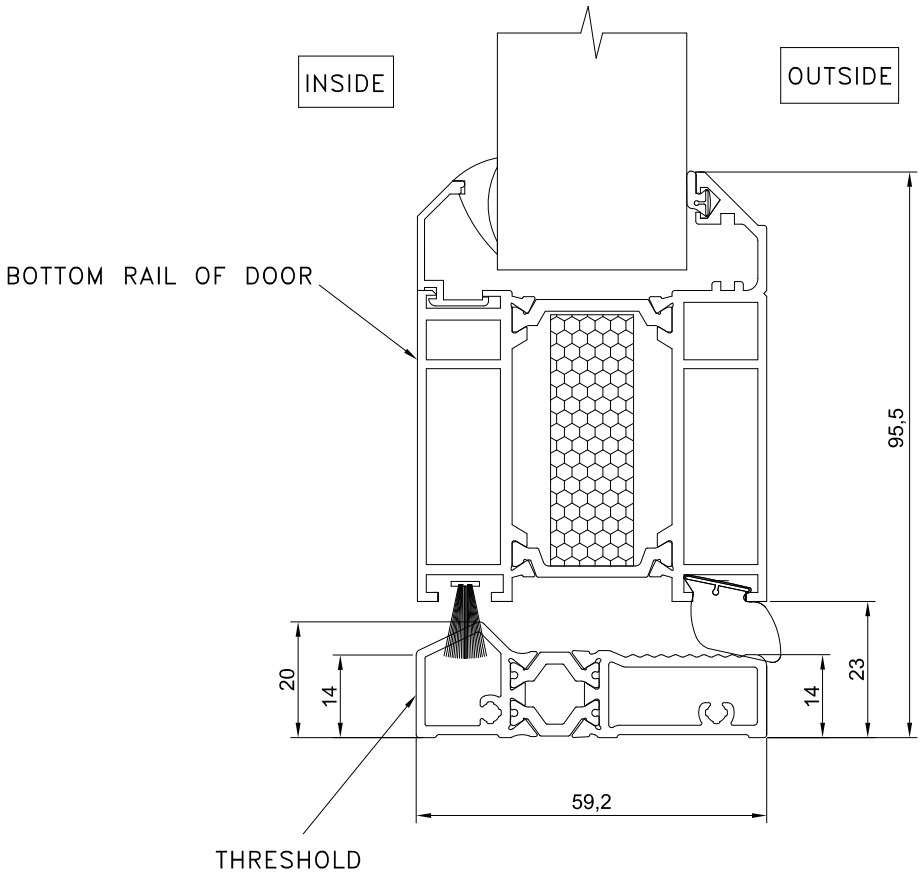


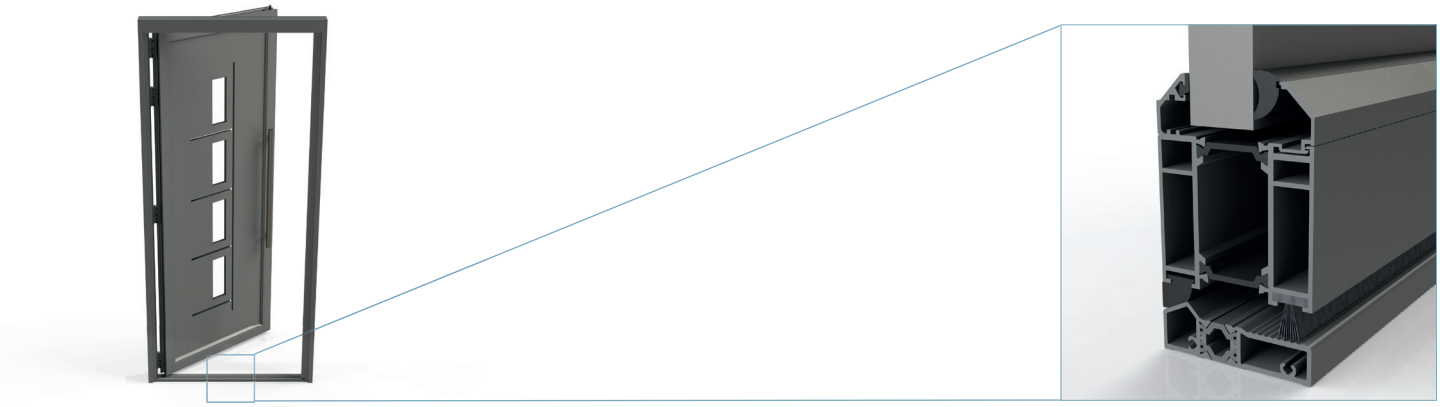

## 5a Mobility Threshold Detail: Weather Bar

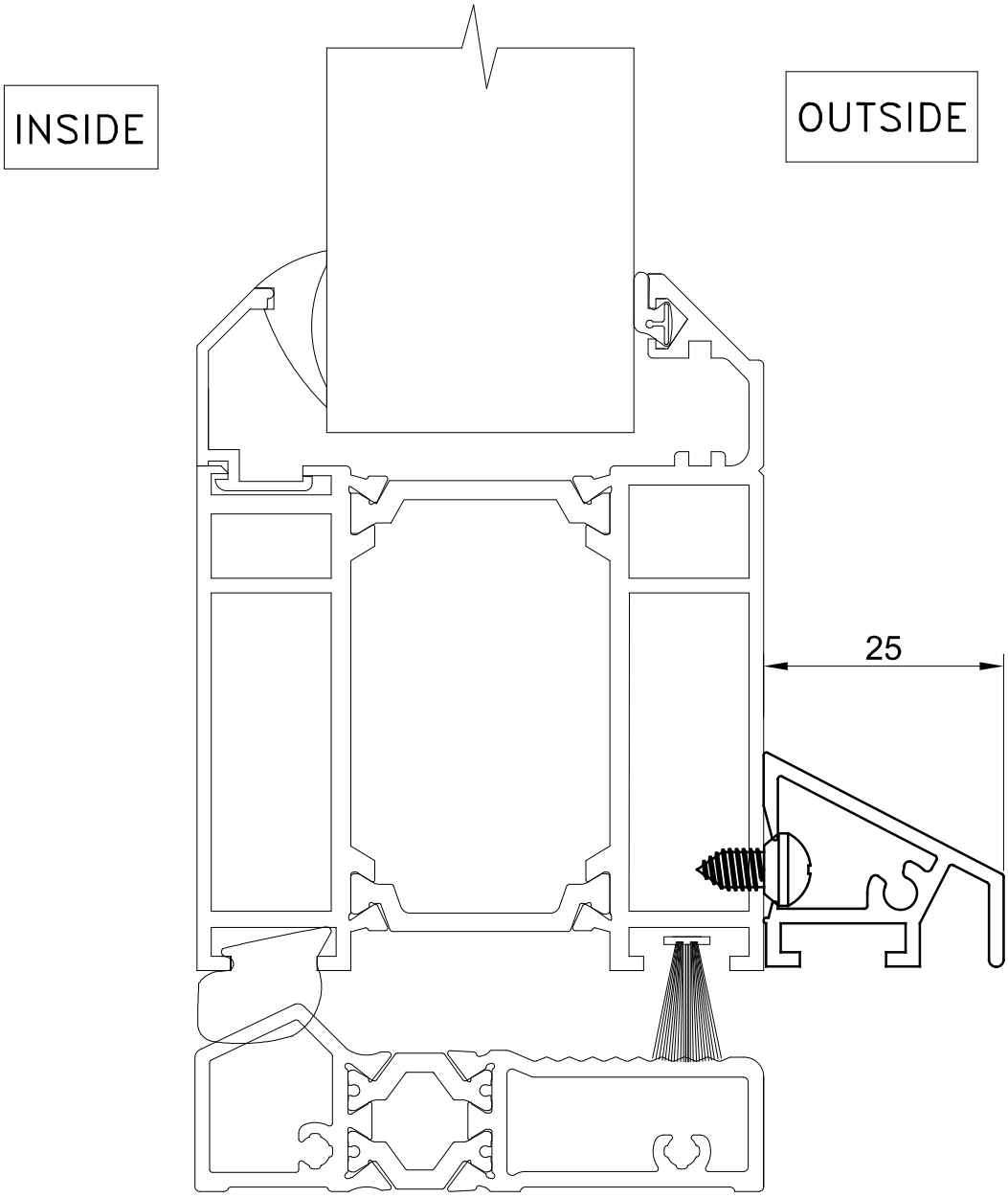

# 5b Weathered Threshold Detail

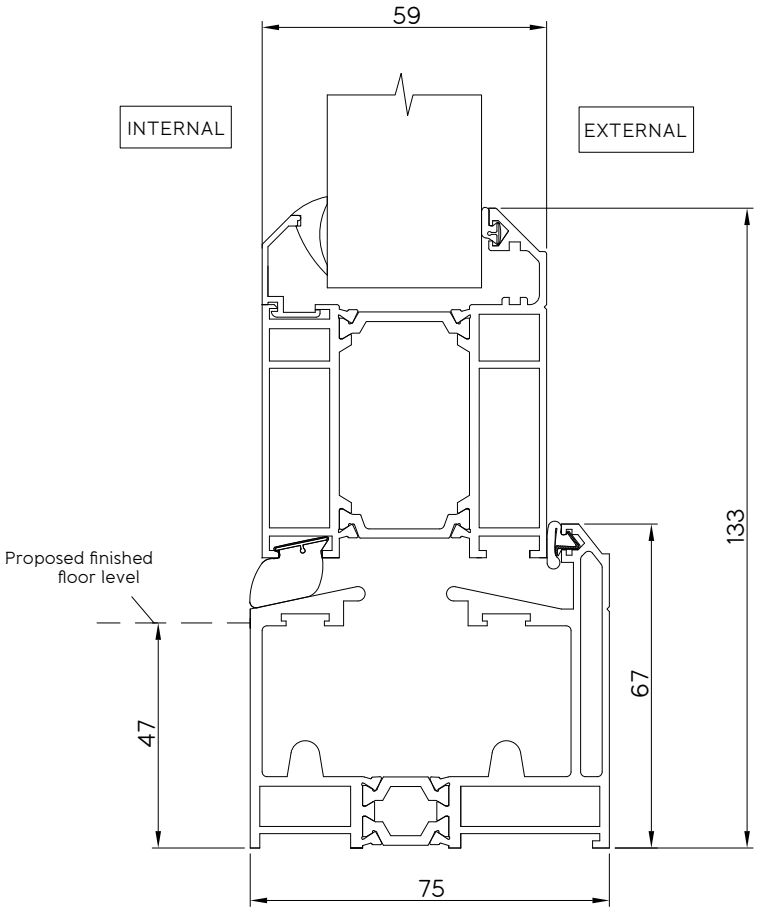


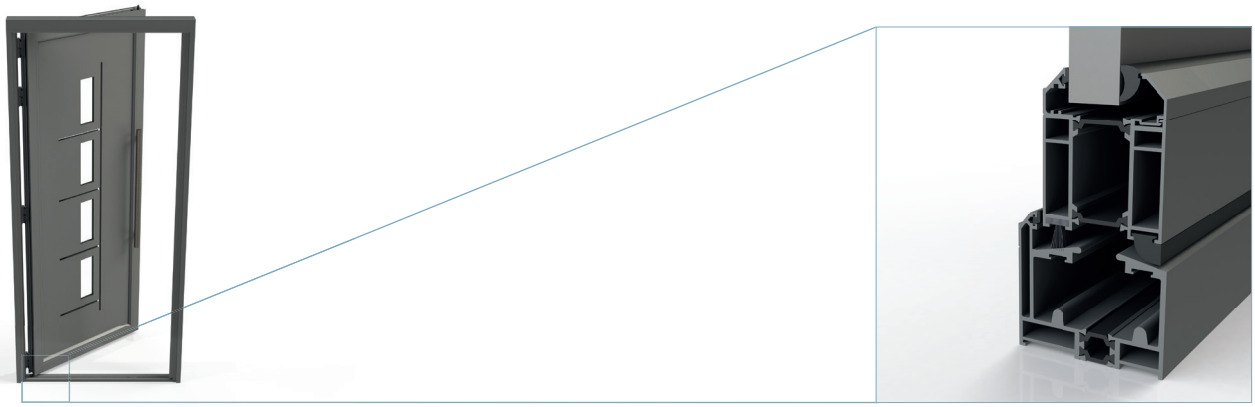

## 5c Weathered Threshold Detail: Weather Bar

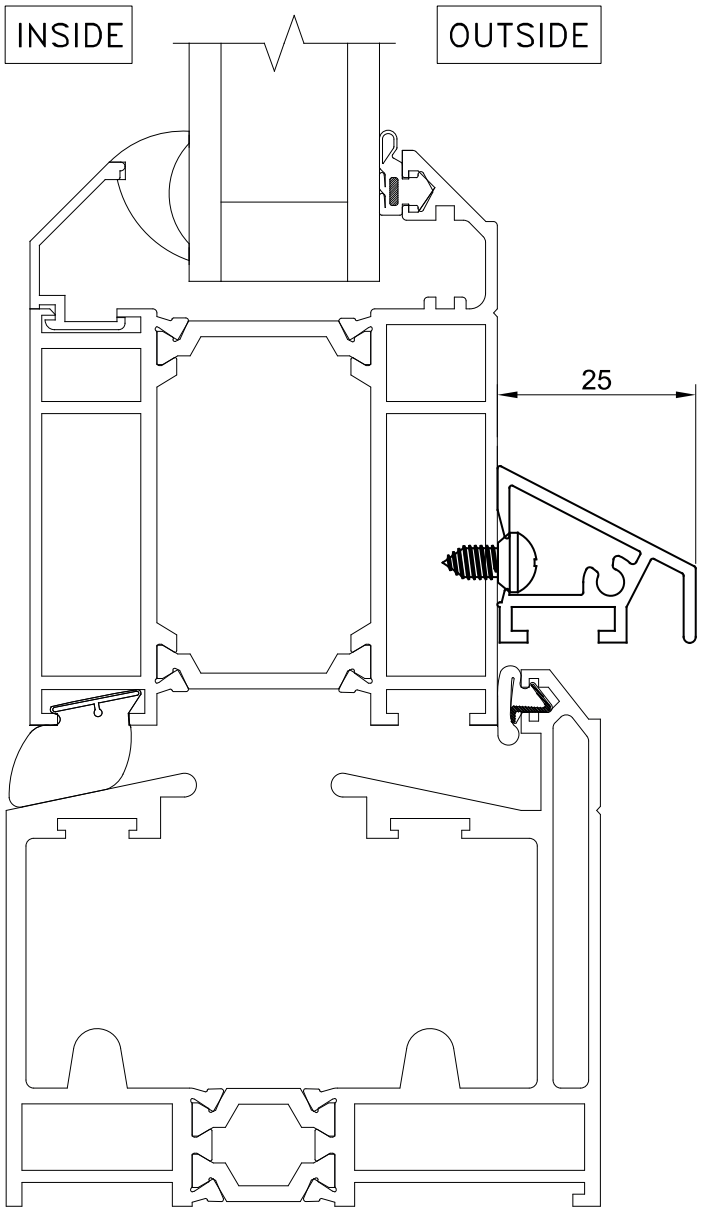

## 5d Non-Weathered Threshold Detail

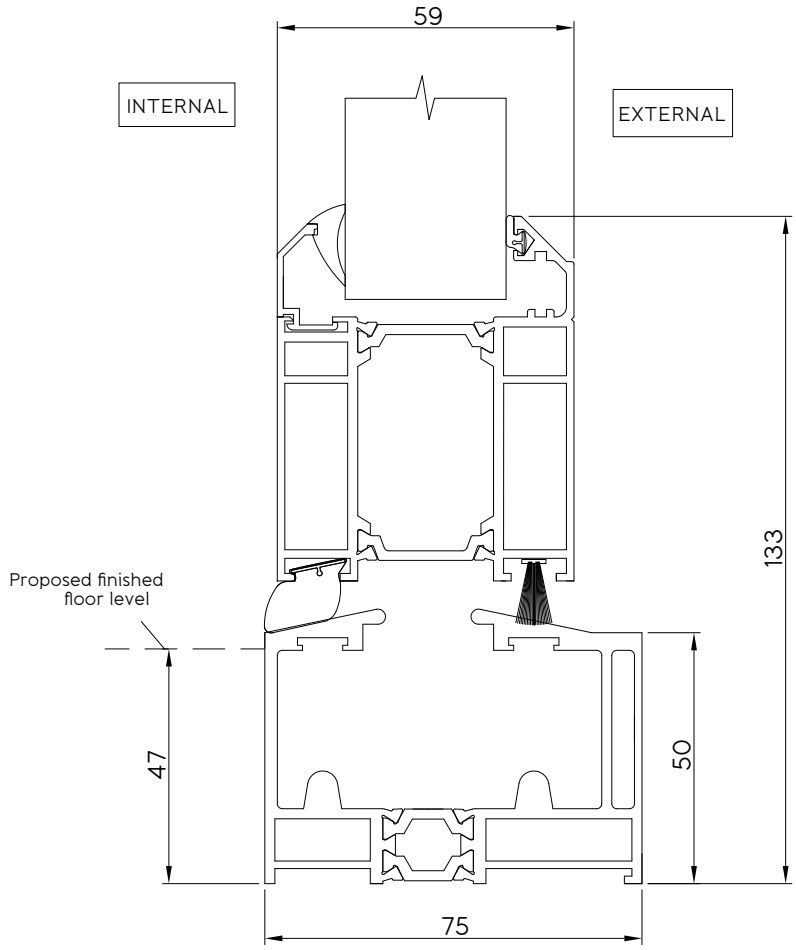


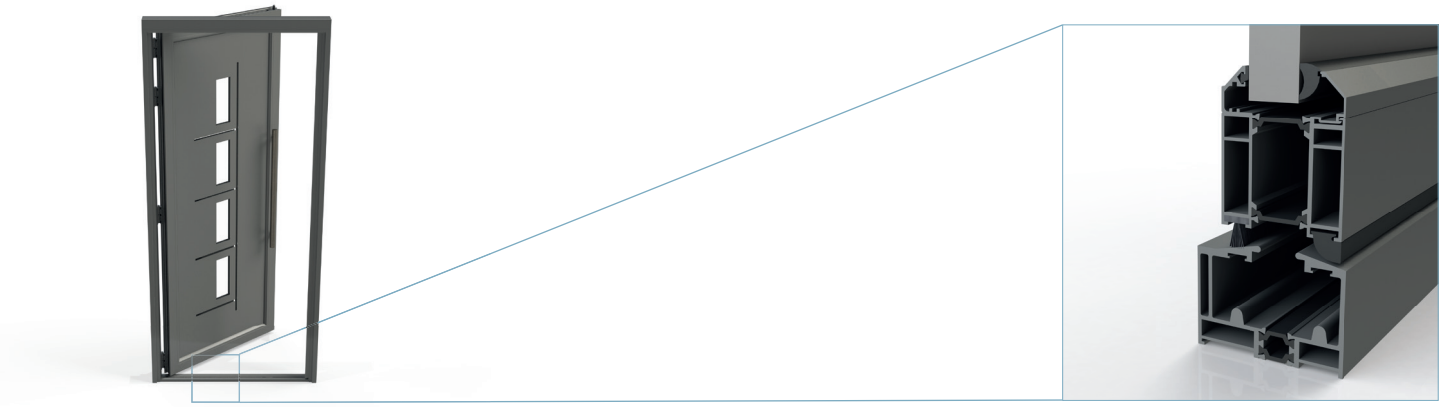

## 5e Non-Weathered Threshold Detail: Weather Bar

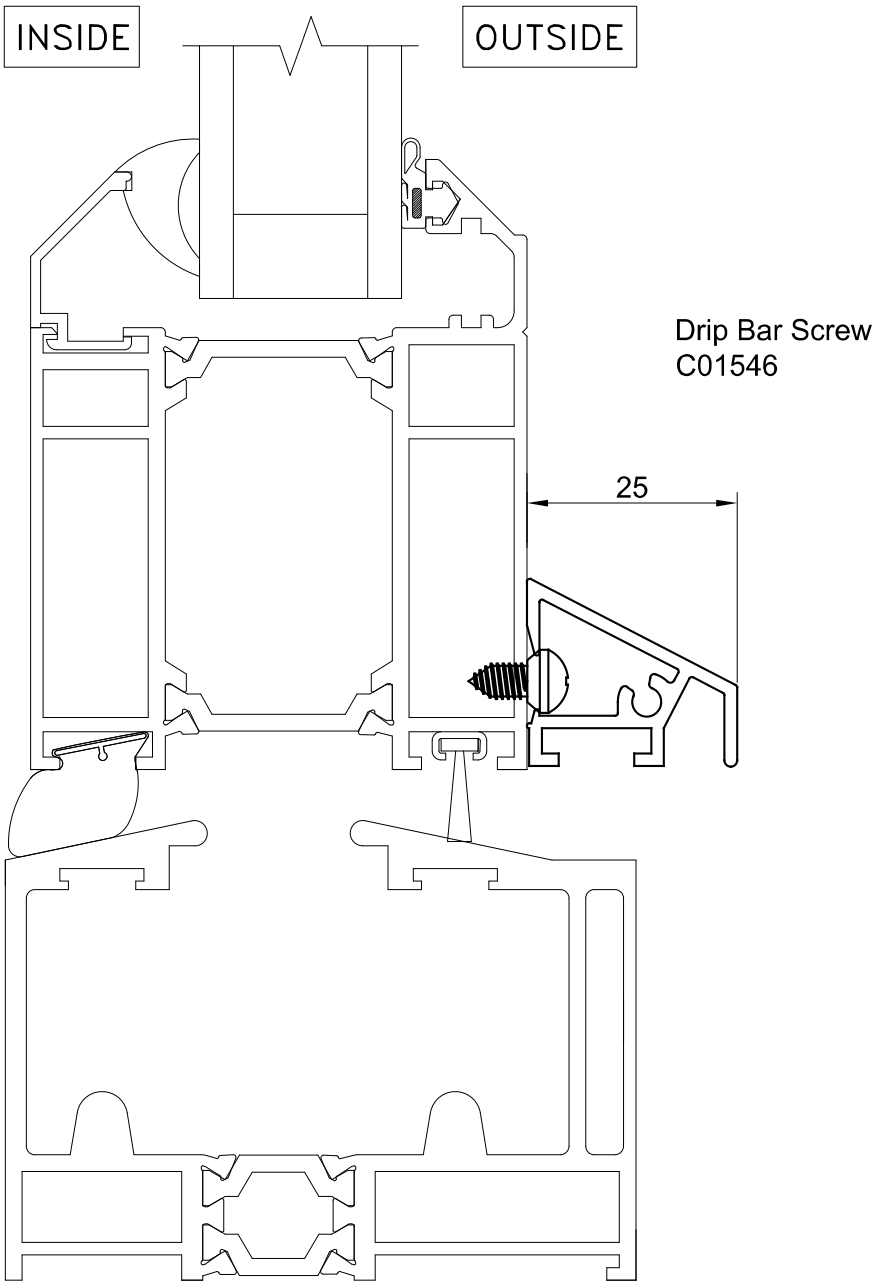

## 5f No Threshold Detail

(Garage door only)

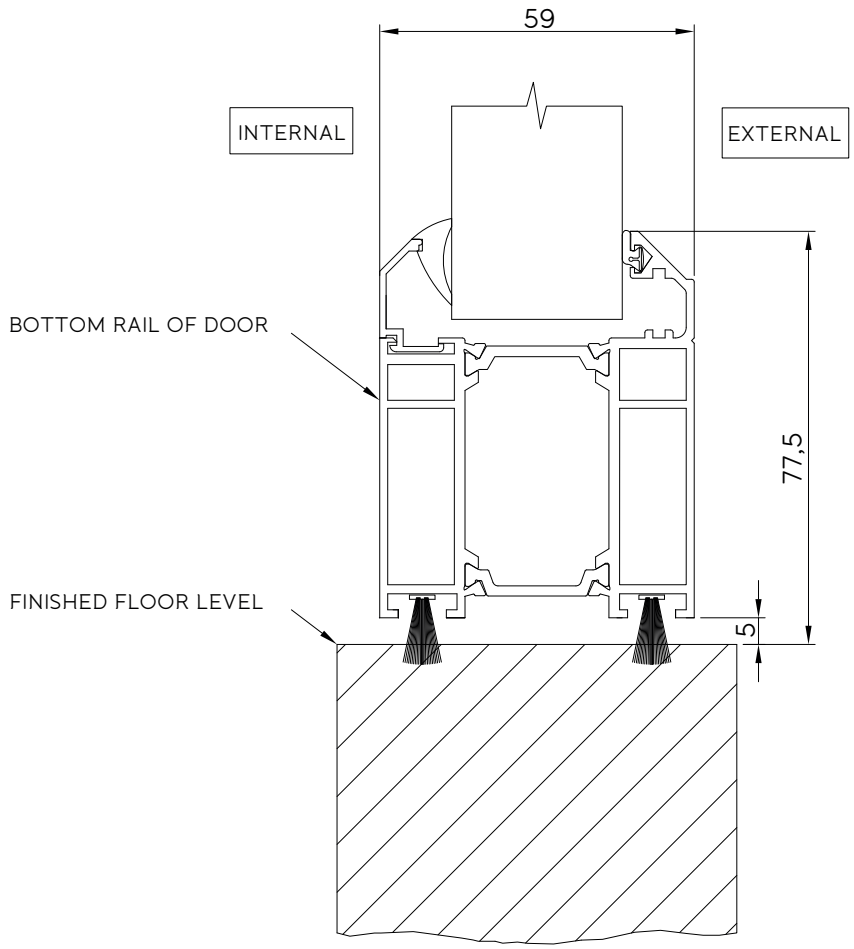


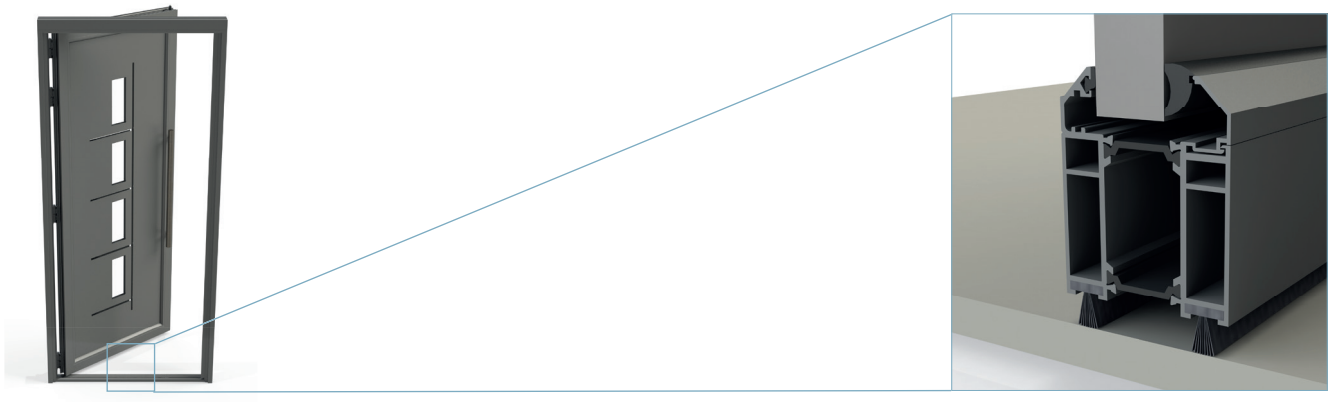

## 6 Locking Slave Detail

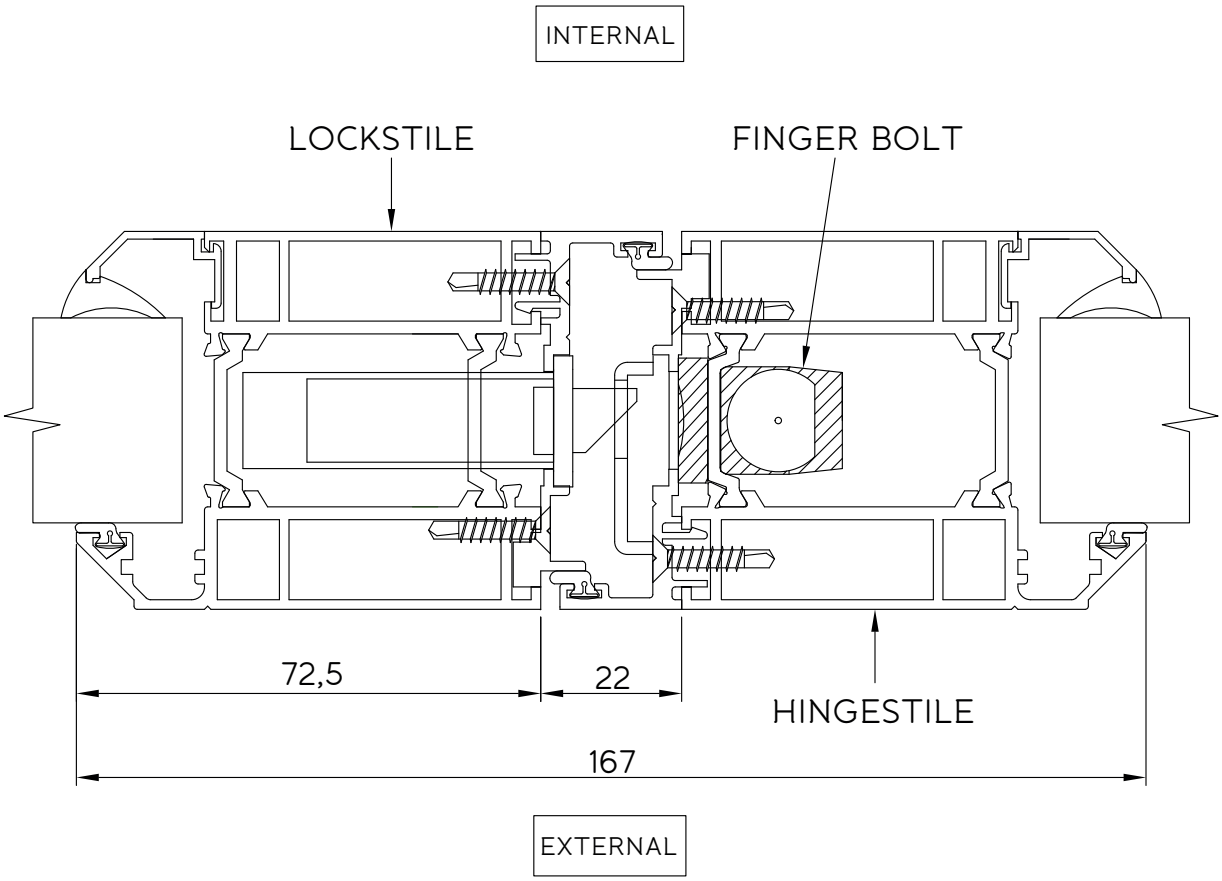


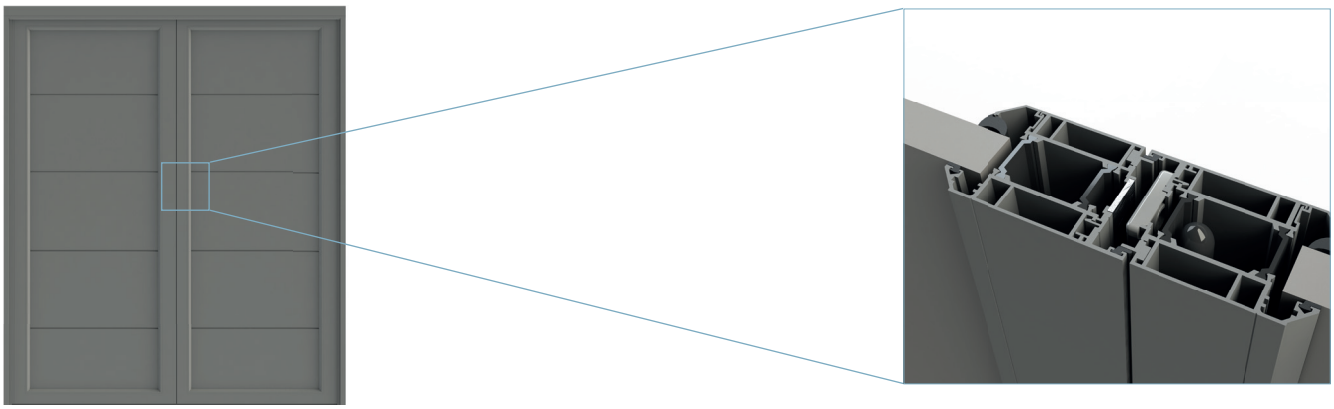

## 7 Window-to-Door Jamb Coupler Detail

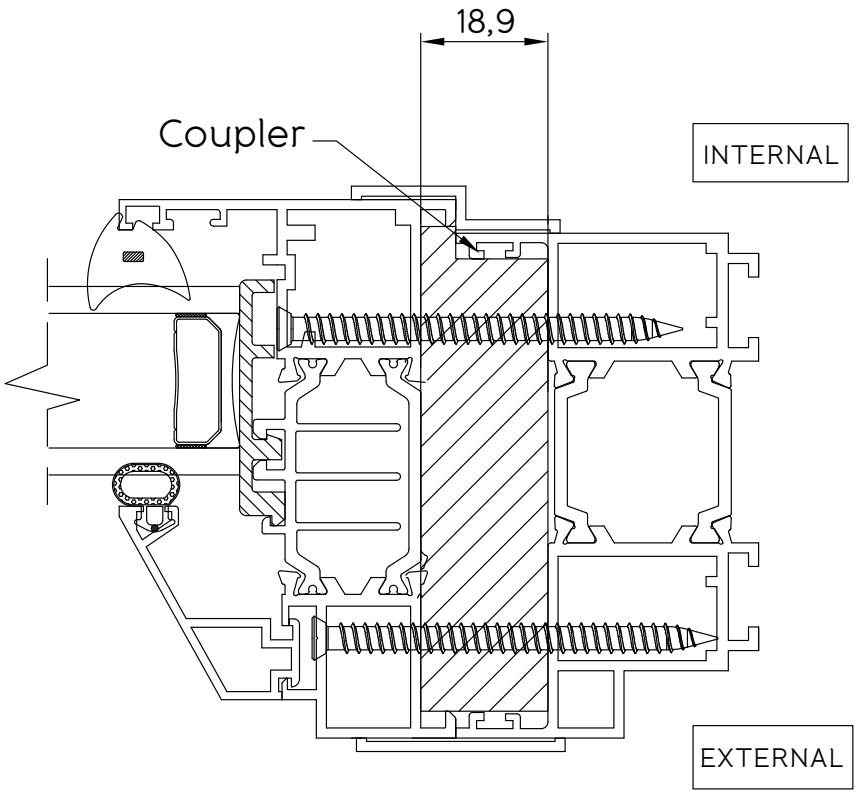


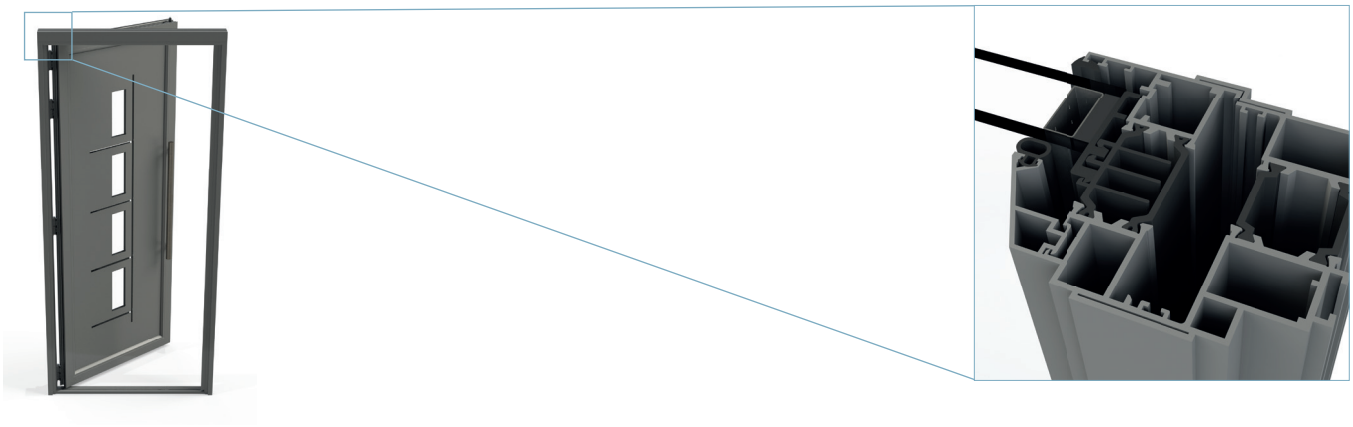

## 8 Window-to-Track Coupler Detail

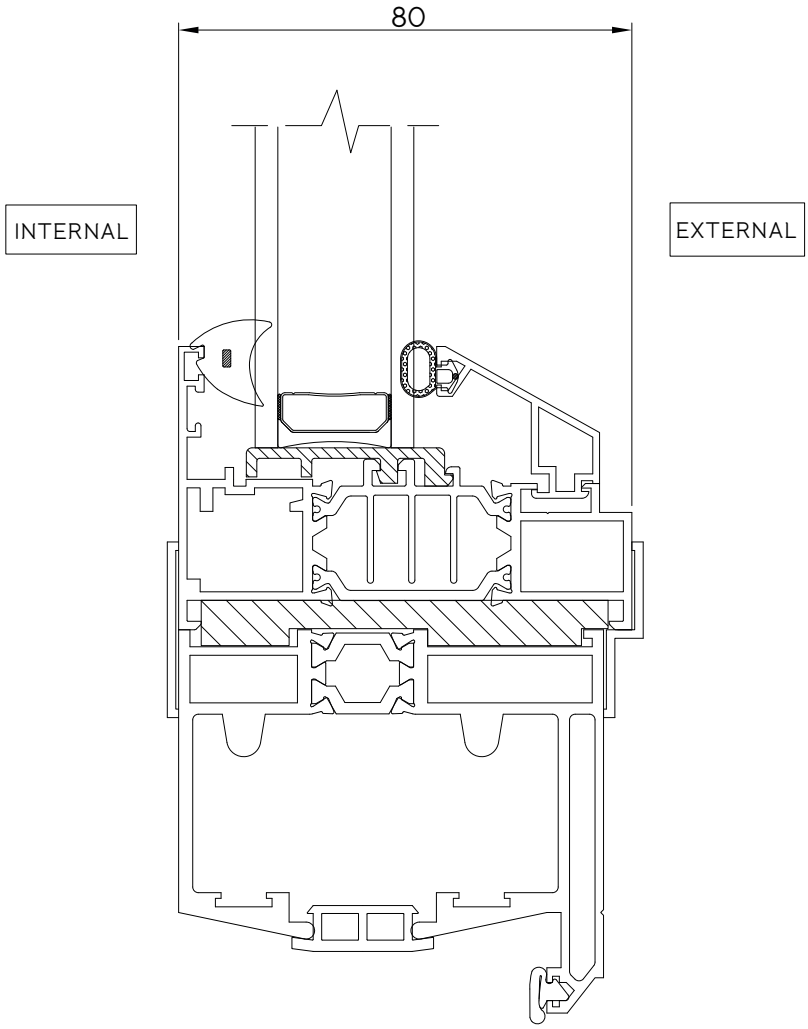


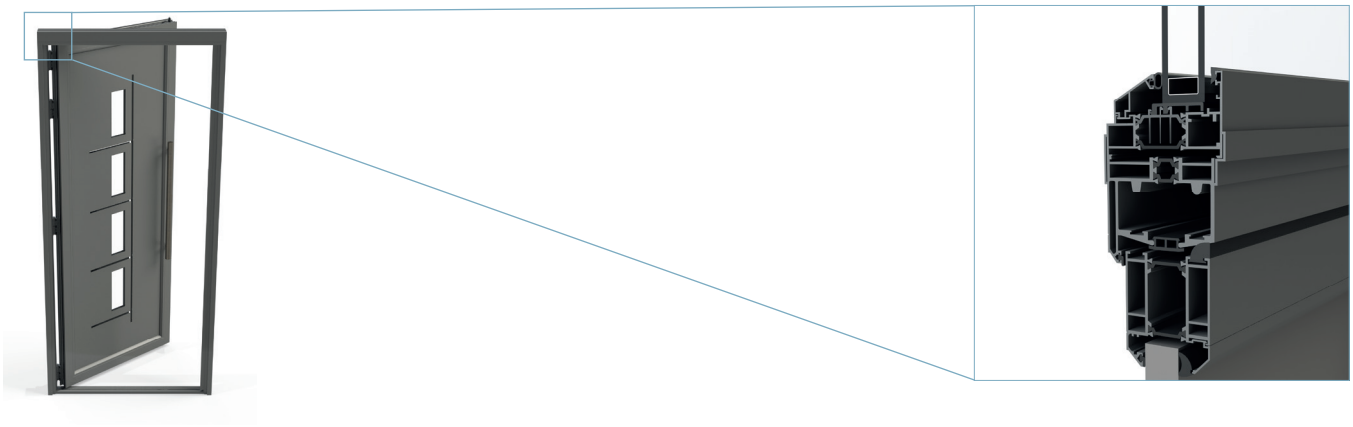

# 9 Mid-rail Detail

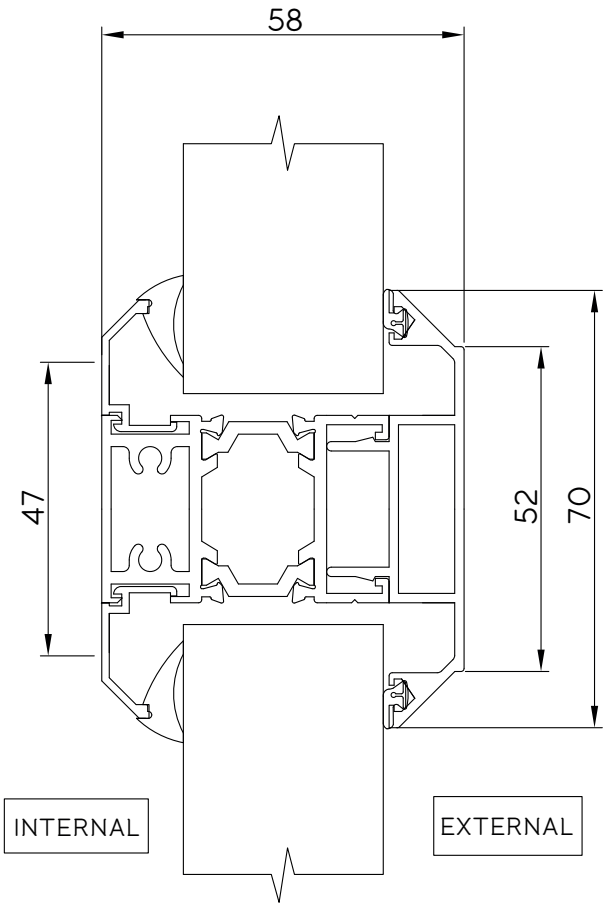


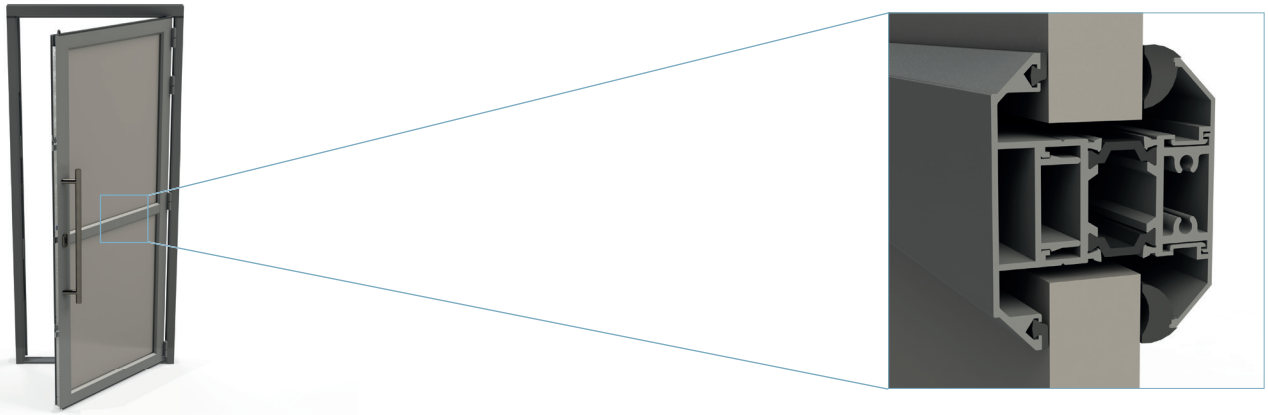

# 11 Cills

95mm Cill

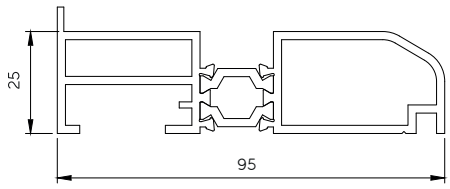


155mm Cill

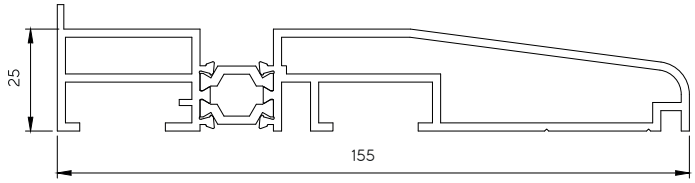


180mm Cill

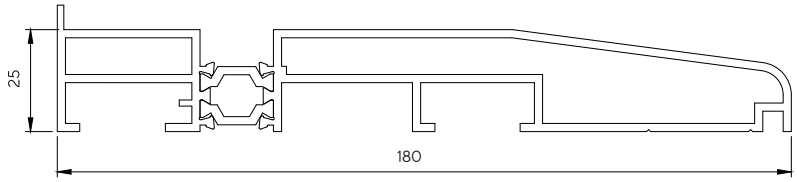


225mm Cill

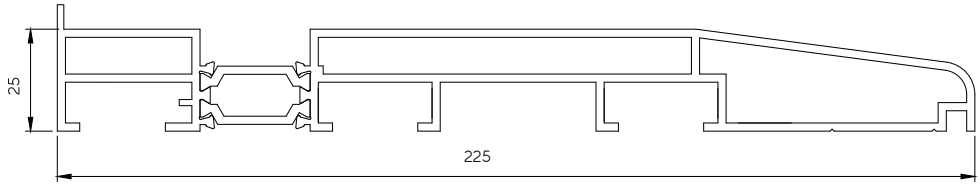




## 13a 28mm Glazing Unit

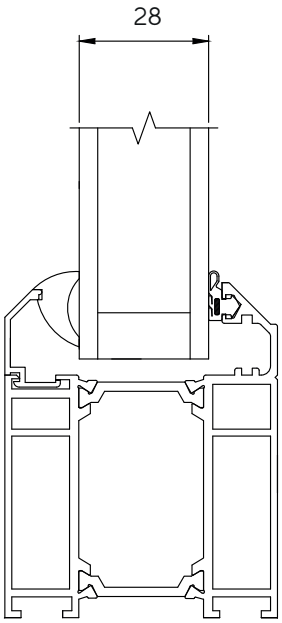


## 13b 32mm Glazing Unit

