Consulting Civil Engineers

Water Neutrality Report

Picts Lane, Cowfold, West Sussex

For

Heath Construction Building Contractors Ltd

Rev – **P1**

Reference **C2795**

Date **8th October 2024**

Revision	Date of Issue	Comments	Prepared By	Checked By
P-	16th August 2023	Initial Issue	LT	CS
P1	8th October 2024	Revised	LH	CS

Richard Cobden House, Lion Street, Chichester, West Sussex, PO19 1LW
Tel: 01243 933253 E: mail@cgscivils.co.uk **W:** www.cgscivils.co.uk

1 Introduction

1.1.1 CGS Civils Ltd has been appointed by Heath Construction Building Contractors Ltd to undertake a Water Neutrality Report for a proposed development at Picts Lane, Cowfold, West Sussex. Planning permission is sought for the conversion of the existing piggery to form a one-bedroom annex to the existing listed house. The site falls within the Sussex North Water Supply Zone, in which Natural England have written to all authorities within the zone providing a position statement for applications which may place increased pressure on this zone. This explains that recent case law has established that abstraction from the Supply Zone may be having an impact on protected sites (Arun Valley Special Area of Conservations (SAC), Special Protection Area (SPA) and Ramsar site). As a result, developments within this zone must not add to this impact, as such, the purpose of this report is to therefore provide an overview on the potential water usage changes on the site as a result of the proposed development, and to confirm that the site water neutral.

Fig 1. Sussex North Water Supply Zone Area

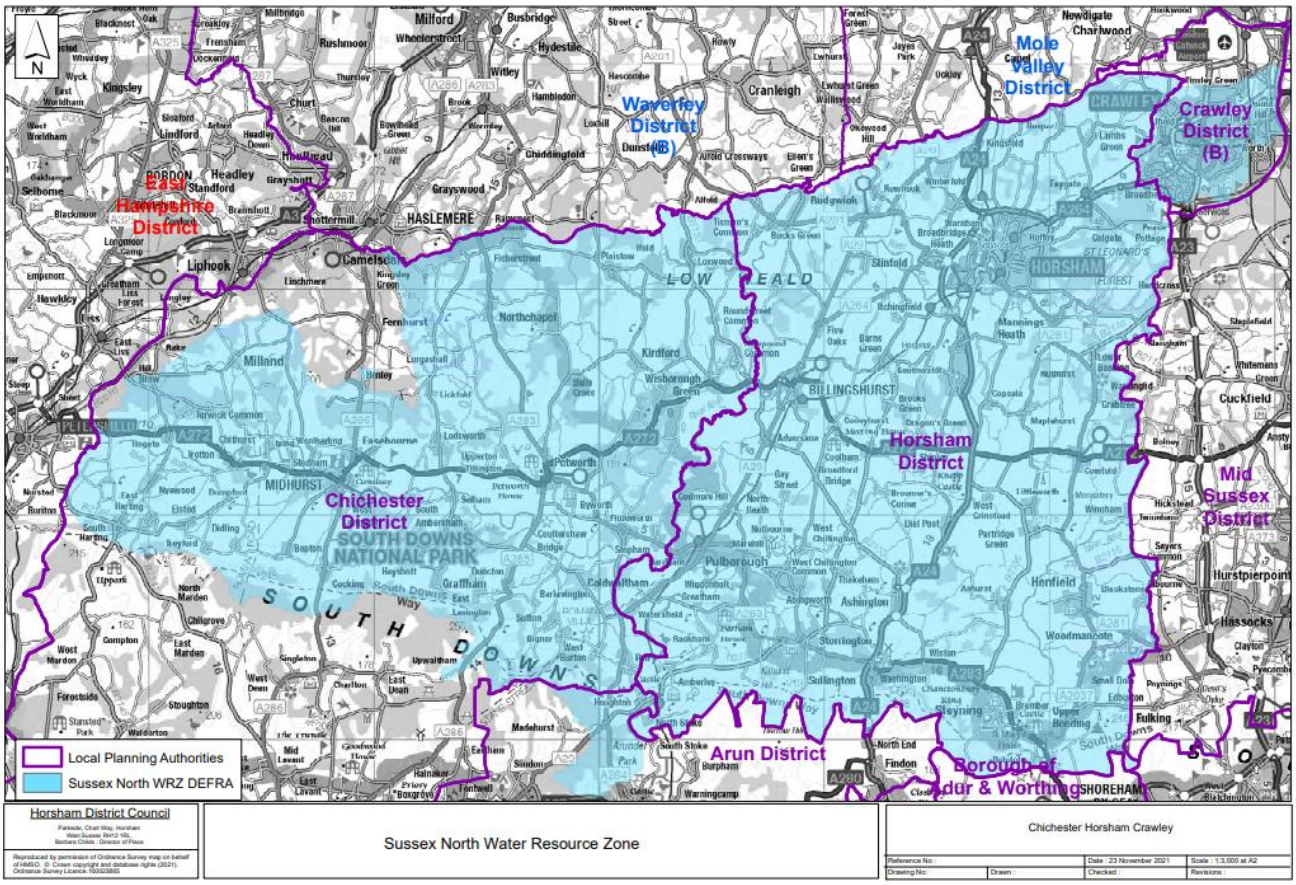

Fig 1. Site Location

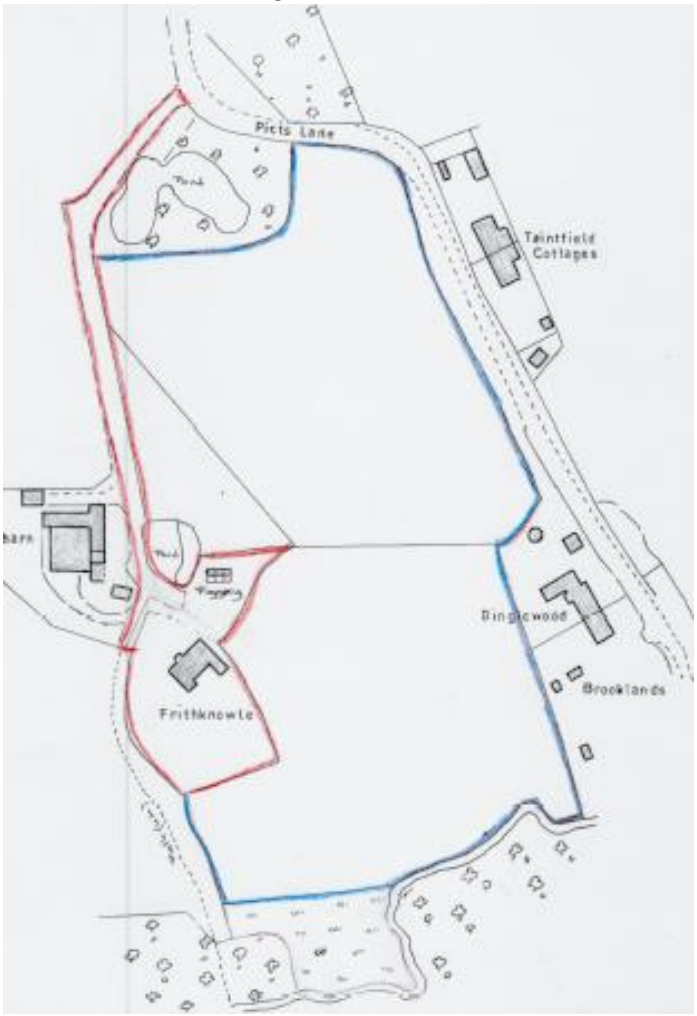

1.1.2 Waterwise defined Water Neutrality as:

'For every new development, total water use in the region after the development must be equal to or less than the total water uses in the region before the new development.'

1.1.3 Achieving water neutrality involves using a three-step approach. First, the demand for water from the new development must be reduced as far as is practicable, followed by the re-use of water; then the remaining demand should be offset within the region. Following this three-step approach allows the volume that requires offsetting to be reduced which ultimately reduces the cost of the overall scheme. This is noted within the Waterwise neutrality definition, which defines the three steps which should be undertaken in order to achieve water neutrality in their recent review dated January 2021.

- Reduce water demand in the new development through improvement in efficiency.
- Re-use water, wherever possible.
- Offset the remaining water demand from the new development if required.

1.1.4 The report will be split into the following sections:

- A Review of Water Neutrality demand reduction
- A calculation of estimate water usage from proposed development
- Identification of measures that can be first used to reduce this demand
- Identification of measures that can be used to re-use water
- Establish solutions to offset that demand in order to achieve neutrality.

1.1.5 This report will follow the methods documented within *'A Review of Water Neutrality in the UK'* carried out by Waterwise in January 2021. The document provides details on how developments can achieve water neutrality by utilising the 3-stage approach.

Fig 2. 3-stage approach

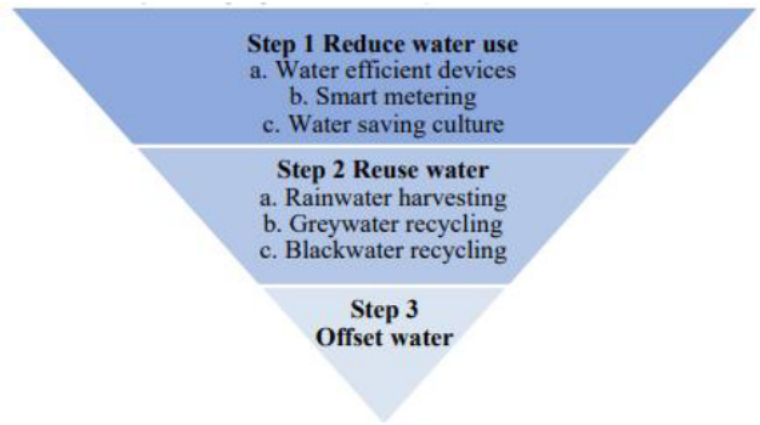

1.1.6 Some increase in water demand within the region from planned development during the local plan period is inevitable. However, it can be minimised by making the site as water efficient as possible.

1.1.7 Per Capita Consumption (PCC) is used as a measure of water use and is the volume of water that is used by one person in one day. It is usually measured in litres per person per day (l/p/d). The average PCC within Southern Water's 'Sussex North Water Resource Zones (WRZ)' is 135 l/p/d. Homes without a water meter consume on average 160 l/p/d and for homes with a water meter, consume on average 131 l/p/d.

1.1.8 Part G of the Building regulations currently states that new build housing should achieve a minimum of 125 l/p/d. A tighter target of 110 l/p/d can be requested if the local authority can establish a clear need based on available evidence.

1.1.9 The table below indicates different demand scenarios including Southern Water's Target 100 Ambition to achieve 100 l/p/d, as well as further scenarios where water demand is cut more dramatically.

Table 1 PCC Demand Scenarios

Demand Scenario	Per Capita Consumption (l/p/d)
British Flows and Loads	150
Building Regulations Standard	125
Building Regulations Optional	110
Target 100	100
Realistic Achievable	85
Ambitious	62

1.1.10 The benefits of water neutrality are wide ranging, from financial and reputational to environment and social. For a new domestic building, they could include:

- **Saving Water** – Over 100,000 litres of water can be saved per year for each water neutral home built
- **Saving Carbon** – A significant CO2 saving can be achieved by reducing the demand for hot water for baths, showers, basins, dishwashers and washing machines
- **Saving Money** – Both water and energy bills will reduce
- **Reducing environmental impact** – Decreasing water abstracted from rivers and groundwater sources
- **Improved Resilience** – For the future by minimising the additional pressure on water resources
- **Enabling future housing growth** – In water scarce areas by reducing the impact of new homes and buildings
- **Reducing discharge to sewage** – by using less water, collecting rainwater and recycling greywater, less water is discharged to the drainage network
- **Short pay-back time** – After approximately 5 years the saving of water neutrality will outweigh the costs of doing so.

2 Executive Summary

2.1.1 The proposed development is to convert an existing piggery into a 1-bedroom annexe, which is to have the water demand offset against an existing adjacent dwelling. In line with Horsham District Council's guidance, a survey of all existing fixtures and fittings that evidences their water consumption rate should be provided within a Building Regulations Part G water calculator or equivalent. This has been provided, refer to C2795 – Existing Fittings Survey.

2.1.2 The existing dwelling has a confirmed occupancy of 2 people, with water bills proving there is a demand of **264.75 l/day**. Through retrofitting of existing fittings and the installation of water butts for external usage, it is possible to reduce the water demand down to **84.035 l/p/d,** which is a total demand of **168.07 l/day**. This results in the reduction of **96.68 l/day** which is sufficient to offset the proposed annexe.

2.1.3 As proven within this report, the use of low water usage fittings and rainwater harvesting can demonstrate water neutrality on site.

Table 2 Water Usage Comparison

Existing Water usage	**0 l/day**
Proposed Scheme water usage	**81.3 l/day**
Water demand release from retrofitting of adjacent welling	**96.68 l/day**
Proposed Scheme water usage equal to or lower than existing site	Yes

3 Calculation of estimate water usage from the proposed development

3.1.1 Before any necessary steps to achieve water neutrality can be determined, the total water demand for the proposed development must first be calculated. The proposed scheme will consist of the conversion of the existing piggery to form a one-bedroom annex to the existing listed house. In accordance with the average occupancy levels set out by Horsham DC, the population for the property will be 1.32.

Table 2 Average occupancy levels

Number of bedrooms	Average occupancy level
1	1.32
2	1.88
3	2.47
4	2.86
5	3.09

3.1.2 As the proposed property will be a new dwelling, Policy 37 of the Horsham District Planning Framework (HDPF) triggers the requirement for the optional building regulations standard of 110 litres per person per day (l/p/d), therefore:

1.32 x 110 l/p/d
= 145.2 l/day

3.1.3 The following sections within this report will cover measures that can be undertaken in order to reduce the water consumption of the proposed property and aim for the 'Ambitious' PCC of 62/l/p/d.

4 Step 1 – Identifying measures that can be used to reduce this demand

4.1.1 The first and most important step in achieving water neutrality will be to ensure that the water used by the proposed development is used as efficiently as possible; the smaller the water demand of the building due to the design and fittings, the less water is needed to be reused and offset. There are a number of ways of achieving a smaller water demand:

- Fitting homes with efficient products, such as:
  - Aerated Taps
  - Aerated Shower heads
  - Low Flush Toilets, or air flush toilets
  - Water efficient white goods
- Installing Smart Meters, this allows the consumer to see how much water they are using, and how this affects their water saving bill. This can help consumers to reduce water usage, identify leaks, and meet water saving targets, with the bonus of reduced bills.
- Designing home to encourage water saving behaviours, this can also help reduce water use and help ensure that other measures that are put in place are effective. Education and awareness are important components of achieving water neutrality.

4.1.2 Building Regulations Part G states that when the new fittings approach is used, the water consumption of the fittings must not exceed a total of 125 l/p/day/. The values are listed in the Table 3 below:

Table 3 Maximum Fittings Consumption from Building Regulations Part G

Water Fitting	Maximum Rating
WC	6.4/ litres dual flush or 4.5 litres single flush
Shower	10 l/min
Bath	185 litres
Basin Taps	6 l/min
Sink Taps	8 l/min
Dishwasher	1.25 l/place setting
Washing Machine	8.17 l/kilogram

4.1.3 Should the proposed development be required to comply with the optional water efficiency as part of the conditions for planning permission, the estimated consumption of water can be calculated via the Optional requirement level of fittings consumption. This is listed within Building Regulations Part G, which also states that the water consumption must not exceed 110 l/p/day, and the maximum fittings consumption for optional requirement can be found in Table 4 below:

Table 4 Maximum fittings consumption optional requirement level from Building Regulations Part G

Water Fitting	National Base Level
WC	4/2.6 litres dual flush
Shower	8 l/min
Bath	170 litres
Basin Taps	5 l/min
Sink Taps	6 l/min
Dishwasher	1.25 l/place setting
Washing Machine	8.17 l/kilogram

4.1.4 However, to improve on the above requirements, the proposed site can implement the following measures in order to focus on becoming a water efficient development. By installing the following features, the development can achieve a water demand of around 85 l/p/d, which aligns with a 'Realistic Achievable' PCC. See Table 5 below:

Table 5 Water efficient fittings consumption

Water Fitting	Consumption Level
WC	4/2.6 litres dual flush
Shower	7 l/min
Bath	145 litres
Basin Taps	2.5 l/min
Sink Taps	5 l/min
Dishwasher	0.67 l/place setting
Washing Machine	5.5 l/kilogram

Please note that by accepting this report, you accept the low flow rates of the proposed fittings required to achieve water neutrality. CGS Civils cannot be held responsible for any reduced comfort levels that may arise from the use of these fittings.

4.1.5 Water demand can also be reduced through fitting metres, which help to identify leaks and track water consumption as a way to support and encourage behavioural changes such as, not leaving the tap running when brushing teeth and using eco settings on the washing machine and dishwasher. It should be noted that behavioural changes have not been used within the calculations within this report as it is impossible to enforce.

Table 6 Practical Summary of Step 1

Step 1: Reduce Water				
Toilets	Cistern displacement devices (toilet hippos)	Retrofit flush devices to dual flush	Fix leaky toilets	
Taps	Tap inserts (aerators)	Low flow restrictors	Push taps	Infrared Taps
Showers/baths	Low flow shower heads (less than 8litres/min)	Shower timers	Reduced bath frequency & volume	
Outdoors	Hosepipe flow restrictors	Hosepipe siphons	Water butts	Mulches and composting to keep soil moist
Smart Metering	Leakage information	Encourage behavioural changes	Innovative tariffs	Savings estimates

4.1.6 By installing the water efficient devices listed above, it is possible to reduce the water demand on site from **145.2 l/day** down to **117.526 l/day**

1.32 x 89.035 l/p/d

= **117.526 l/day**

- *1.32 (average occupancy level for a 1-bedroom dwelling) x 89.035 (Appendix A – Water Calculator for Proposed fittings)*

5 Step 2 – Identify measures that can be used to re-use water

5.1.1 Once the water demand has been reduced via the installation of water efficient products, water reuse should be considered. The term 'water reused' refers to the capture, treatment (if it is required) and the use of alternative water supplies for non-potable purposes. It includes:

- Rainwater and surface water harvesting
- Greywater recycling (typically the used water from baths, showers and hand basins)
- Wastewater recycling.

5.1.2 The installation of water reusing technology has the potential to save significant amounts of water; for example, 24% of water in the home is used for flushing the toilet and only 4% externally in the garden meaning a water reuse system could save at least a quarter of the demand if it was installed for these purposes. Depending on the quality and the system installed, it could also be possible to re-use water for a washing machine which accounts for 12% of total water usage.

Table 7 Practical Summary of Step 2

Step 2: Reuse Water			
Rainwater Harvesting	Small scale water butt	Rainwater Harvesting system for individual homes and buildings	Large scale surface water harvesting
Greywater Recycling		Small systems for individual homes	Largest scale systems for commercial and mixed-use sites

5.1.3 The installation of water reusing technologies will further reduce the water demand on site, depending on the harvesting tank installed. The proposed roof area is sufficient to provide the required water to the property via a rainwater harvesting tank as well as has sufficient capacity for a 35-day drought period. **See Appendix C**.

5.1.4 By installing the water efficient devices listed above as well as the rainwater harvesting technologies listed above, the total demand will be reduced to:

1.32 x 61.6

= 81.312 l/day

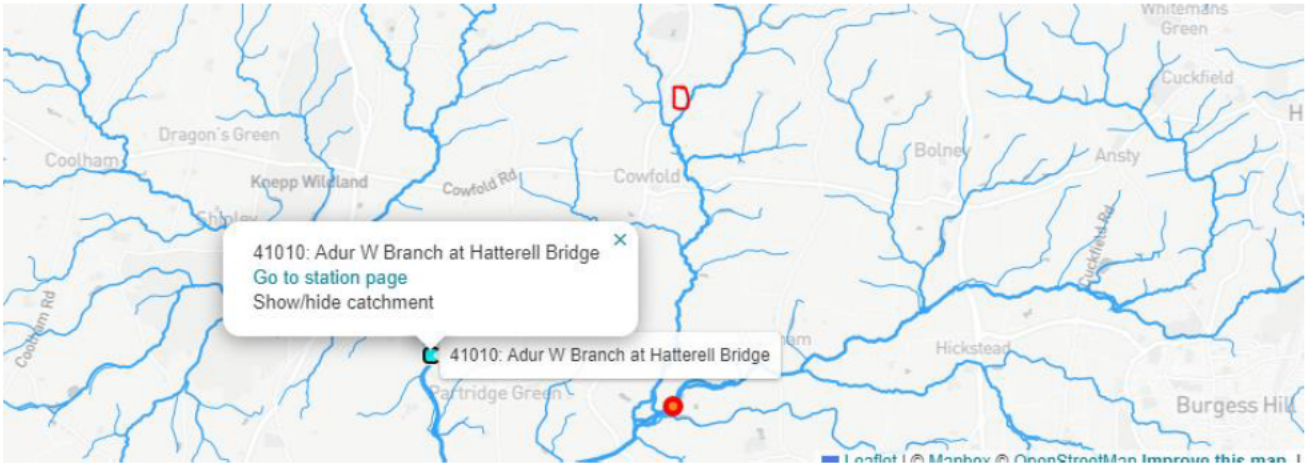

5.1.5 In addition to the rainwater harvesting tank calculator in Appendix C which proves that there is sufficient roof area to account for the water usage within the property. A separate calculation is to be made to ensure that the rainwater harvested is greater than the rainwater demand within the dwelling. The following is a calculation for 5% of the annual rainwater yield and has been calculated using Rainfall data from the National River Flow Archive which provides annual rainfall data as recorded by the Met office and follows the intermediate approach as detailed within BS 8515:2009.

$$Y_R = A_x e_x h_x n_x 0.05$$

Where:

Y_R = the annual rainwater yield (l)
A = The collecting area (m^2)
e = yield coefficient (%)
h = depth of rainfall (mm)
n = hydraulic filter efficiency

$$2169.6 = 72_x 0.8_x 793_x 0.95_x 0.05$$

5.1.6 In order to ensure there is sufficient roof area, another calculation from BS 8515:2009 must be carried out in order to calculate the annual demand within the property. The following is a calculation for 5% of the annual non-potable water demand.

$$D_N = P_{d\,x}\, n_x 365_x 0.05$$

Where:
D_N = the annual non-potable water demand (l)
P_d = The daily requirement per person (l)
n = number of persons

$$746.8 = 31_x 1.32_x 365_x 0.05$$

5.1.7 To ensure there is sufficient area to allow a 35-day drought storage, an extra 35 days is to be included:

$$\mathbf{818.4} = 31_x 1.32_x 400_x 0.05$$

5.1.8 The client is willing to install a 1500l rainwater harvesting tank for use within the property. The harvesting tank is to be fitted with the following equipment in order to get the rainwater to a level safe for use.

- PREFILT103/4 10" prefilter housing
- CRT10SW-05 5 micro sediment filter
- WH1MH Whole house water filter

5.1.9 The likely contaminants associated with rainwater harvesting systems and how to treat them are:

- Dust – Sediment Filter
- Nitrates – Heavy Metal reduction filter
- Organics – Carbon Filter

5.1.10 It has been confirmed by Silverline UK Ltd that the only maintenance of the system that is required is to replace filters are certain intervals. It is recommended that the:

- PREFILT103/4 10" prefilter housing
- CRT10SW-05 5 micro sediment filter is to be replaced every 6 months, or more frequently if it reduced water flow is experienced.
- WH1MH Whole house water filter will require having the filter media replaced every 12 months.

5.1.11 From the above water calculations, we have:

- Proposed water usage rate of 110 litres/person/day based on 'HDPF'
- Which can then be reduced to a proposed water usage rate of 61.6 litres/person/day with water efficient devices and rainwater harvesting

5.1.12 In order to provide a cumulative consumption comparison between the existing and the proposed water usage, the occupancy rates would be for 'as existing' and 'as proposed':

- Proposed water demand from HDPF – 110 l/p/d at an overall occupancy rate 1.32 people = **145.2 l/day.**
- Proposed Water Demand with water efficient devices listed in **Table 4** and Rainwater harvesting – 61.6 l/p/d at an overall occupancy rate of 1.32 people = **81.312 l/day**

Table 8 Schedule of Example Fittings

Water Fitting	Water Usage	Example Fitting:
WC	4/2.6 litres dual flush	E8967 Sandringham 21
Shower	7 l/min	Hansgrohe Hand Shower Croma S110
Bath	145 litres	Carron Shallow Single Bath
Basin Taps	2.5 l/min	Grohe Eurosmart Cosmopolitan
Sink Taps	5 l/min	Carron Phoenix Pura Plus
Dishwasher	0.73 l/place setting	Bosch SMS6EDI02G
Washing Machine	5.5 l/kilogram	Fisher & Paykel WM1490F1

6 Step 3 – Offsetting remaining water demand

6.1.1 Finally, the remaining water requirements for new homes or developments which cannot be satisfied with non-potable sources must be offset. Offsetting can generally be done by investing in schemes that save water within the local region such as retrofitting existing buildings with water efficient devices or water reuse systems.

6.1.2 In this instance however, the existing Frithknowle is owned by the client and can undergo the 'reduce and re-use' measures that are listed in the above sections 1 and 2. The existing property is a 4-bedroom dwelling which has a confirmed occupancy of 2. The property was purchased back in 2022 and therefore, 3 years of water bills are not available; however, the client has supplied all the water bills they have access to which dates from 12th April 2023 – 31st March 2023, which shows an average water usage of **264.75l/day** or **132.3 l/p/d.**

Date	Previous Reading	New Reading	Water used (m^3 / l)	Usage (l/day)
12th April 2022 – 9th Sep 2022	9934	9975	41 / 41,000	273.3
9th Sep 2022 – 31st March 2023	9975	26.5	52 / 52,000	256.2
Total Average:				**264.75**

6.1.3 By swapping out the fittings within the existing Frithknowle and fitting water butts to the existing dwelling for usage within the garden and for car washing, it is possible to reduce the daily water usage down to **168.07 l/day** (Refer to C295_Existing Fittings Survey). This results in a reduction of **96.68 l/day** which is sufficient to offset the proposed dwelling.

6.1.4 As indicated within the above calculations, it is clear that the proposed site is not only water neutral, but there will be an overall betterment over the existing site's water demand therefore reducing the impact within the region.

Proposed water demand prior to mitigation – 145.2 l/day

Proposed demand post mitigation techniques – 81.312 l/day

Capacity released from modifications to existing dwelling - 96.68 l/day

Difference **- 15.368 l/day**

7 Conclusion

7.1.1 To summarise:

- The proposed development will use on average **145.2l/day** prior to any mitigation techniques.
- This water demand can be reduced to **117.5l/day** through the installation of water reducing appliances
- Re-using the water through rainwater harvesting tanks can further reduce the water demand down to **81.3 l/day**
- The retrofitting of the existing Frithknowle and installation of rainwater butts results in a water demand reduction of **96.68 l/day** which is sufficient to offset the proposed dwelling, therefore making it water neutral.

8 Appendices

8.1 Appendix A:

Table 9 – Water Calculator from Building Regulations Part G – Information input from proposed site with water efficient devices from Table 5.

The Water Calculator for New Dwellings with Water efficient measures					
Installation Type	Unit of measure	Volume/ flow rate	Use factor	Fixed use	Litres/person/day
WC (Single Use)	Flush volume (l)	0	4.42	0	0
WC (Dual Flush)	Full Flush Vol.	4	1.46	0	5.84
	Part Flush vol.	2.6	2.96	0	7.696
WC (Multiple Fittings)	Average effective flush volume (l)	0	4.42	0	0
Taps (excl. Kitchen)	Flow rate (l/min)	2.5	1.58	1.58	5.53
Bath (shower also present)	Capacity to overflow (l)	145	0.11	0	15.95
Shower (bath also present)	Flow rate (l/min)	7	4.37	0	30.6
Bath only	Capacity to overflow (l)	0	0.5	0	0
Shower only	Flow rate (l/min)		5.6	0	0
Kitchen sink taps	Flow rate (l/min)	5	0.44	10.36	12.56
Washing Machine	Litres/kg dry load	5.5	2.1	0	11.55
Dishwasher	litres/place setting	0.73	3.6	0	2.62
Waste disposal unit	litres/use	0	3.08	0	0
Water softener	litres/person/day	0	1	0	0
		Total Calculated use (l/p/d)			92.346
		Contribution from greywater (l/p/d)			0
		Contribution from rainwater (l/p/d)			0
		Normalisation factor			0.91
		External water use			5
		Total water consumption (36(1)) (l/p/d)			89.035

8.2 Appendix B:

Table 10 – Water Calculator from Building Regulations Part G – Information input from proposed site with water efficient devices from Table 4 with Rainwater Harvesting.

The Water Calculator for New Dwellings with Water efficient measures					
Installation Type	Unit of measure	Volume/ flow rate	Use factor	Fixed use	Litres/person/day
WC (Single Use)	Flush volume (l)	0	4.42	0	0
WC (Dual Flush)	Full Flush Vol.	4	1.46	0	5.84
	Part Flush vol.	2.6	2.96	0	7.696
WC (Multiple Fittings)	Average effective flush volume (l)	0	4.42	0	0
Taps (excl. Kitchen)	Flow rate (l/min)	2.5	1.58	1.58	5.53
Bath (shower also present)	Capacity to overflow (l)	145	0.11	0	15.95
Shower (bath also present)	Flow rate (l/min)	7	4.37	0	30.6
Bath only	Capacity to overflow (l)	0	0.5	0	0
Shower only	Flow rate (l/min)		5.6	0	0
Kitchen sink taps	Flow rate (l/min)	5	0.44	10.36	12.56
Washing Machine	Litres/kg dry load	5.5	2.1	0	11.55
Dishwasher	litres/place setting	0.73	3.6	0	2.62
Waste disposal unit	litres/use	0	3.08	0	0
Water softener	litres/person/day	0	1	0	0
		Total Calculated use (l/p/d)			92.358
		Contribution from greywater (l/p/d)			0
		Contribution from rainwater (l/p/d)			30.086
		Normalisation factor			0.91
		External water use			5
		Total water consumption (36(1)) (l/p/d)			61.66

8.3 Appendix C:

Rainwater Harvesting Tank Size Calculator:

COLLECTABLE ROOF AREA (M²)

Main Building	Width:		Length:		Rain Collection Area:	0 m²
Extension one	Width:		Length:		Rain Collection Area:	0 m²
Extension Two	Width:		Length:		Rain Collection Area:	0 m²
Extension Three	Width:		Length:		Rain Collection Area:	0 m²
Or the total roof area, if you already know it:				72	Total area of collectable roof space:	72 m²
Select Your Region		England SE & Central			Average rainfall per year in your region:	64 L
Collectable rainwater per annum in litres - discounted by 20% to account for water loss						**36864 L**

USE OF RAINWATER IN THE BUILDING

	people:	bedrooms:	
Number of people or bedrooms in the building -	1	0	
☑ Number of clothes washing cycles per day (*50 litres each*)	0.25 Cycles	12.50	L
☑ Number of toilet flushes per day (*4.42 flushes per person, average 5 litres each*)	4.42 Flushes	22.10	L
Outdoor use in litres, per person per day (*recommended 5 litres per person per day*)	5	5.00	L
Amount of water you require every day		39.6	L
Amount of water you require every year	**DEMAND**	**14454**	**L**

FINAL FIGURES

How many days drought protection do you need? Typically 21 (18 minimum)	35	
Capacity of water storage in litres required for drought protection	1386.00	L
The lesser of YIELD (blue) or DEMAND (green) per annum	14454	L
Therefore, volume of rainwater storage required	**1386**	**L**

CONCLUSION

Is there sufficient roof water available:		YES
Recommended tank size from our shallow dig range:	F-Line Range:	1500 LITRE F-LINE TANK

8.4 Appendix D:

Example Rainwater Harvesting Tank Brochure:

Carat Rainwater Harvesting solutions



Carat



RAINWATER H

WASTEWATER

RAINWATER RETENTION

DRINKING WATER RESERVOIRS

Edition 2007
Salesfolder C 27-2 Carat EN

Benefits of the Carat System

Flexible, stackable, user-friendly and better for the environment

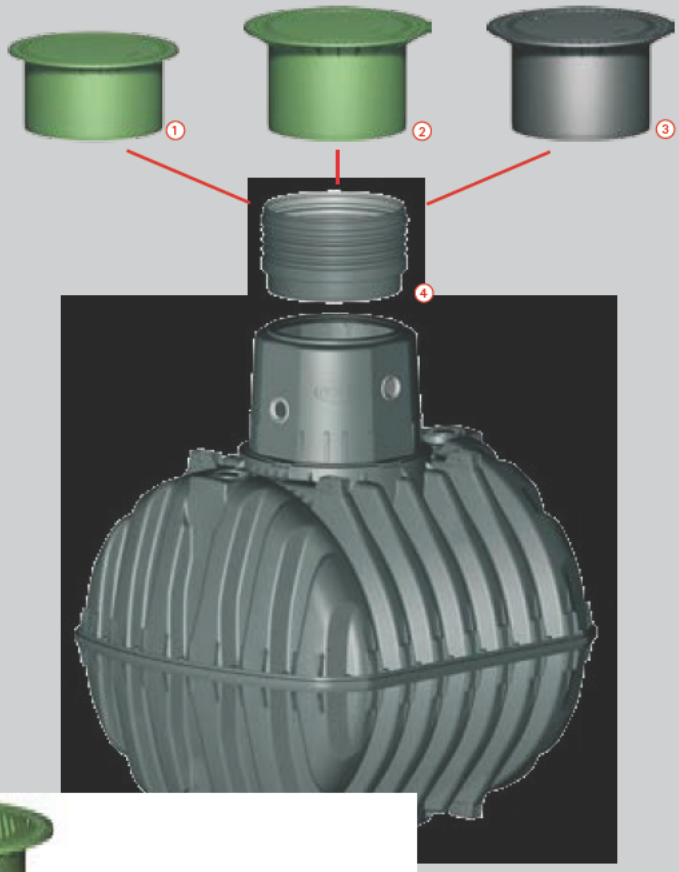

① **Mini telescopic dome shaft with PE lid**
Designed for non-vehicle loading and ideal for garden use, the shaft can be adjusted from 750 - 950 mm and tilted up to 5% to sit flush with the ground level. Includes a PE lid with child safety lock. This item is supplied in green.

② **Maxi telescopic dome shaft with PE lid**
Designed for non-vehicle loading and ideal for the Complete Package (Eco-Plus), the shaft can be adjusted from 750 - 1,050 mm and tilted up to 5% to sit flush with the ground level. Includes PE lid with child safety lock. This item is supplied in green.

③ **Vehicle loading telescopic dome shaft with cast iron lid**
Designed for vehicle loading applications, the tank can be adjusted from 750 -1,050 mm and tilted up to 5% to sit flush with the ground level. Includes child-safe cast iron cover. This item is supplied in dark grey.

④ **Extension**
For use with the telescopic dome shaft to increase the height of the lid from 1,000 - 1,500 mm. Always refer to installation instructions when usig this item.

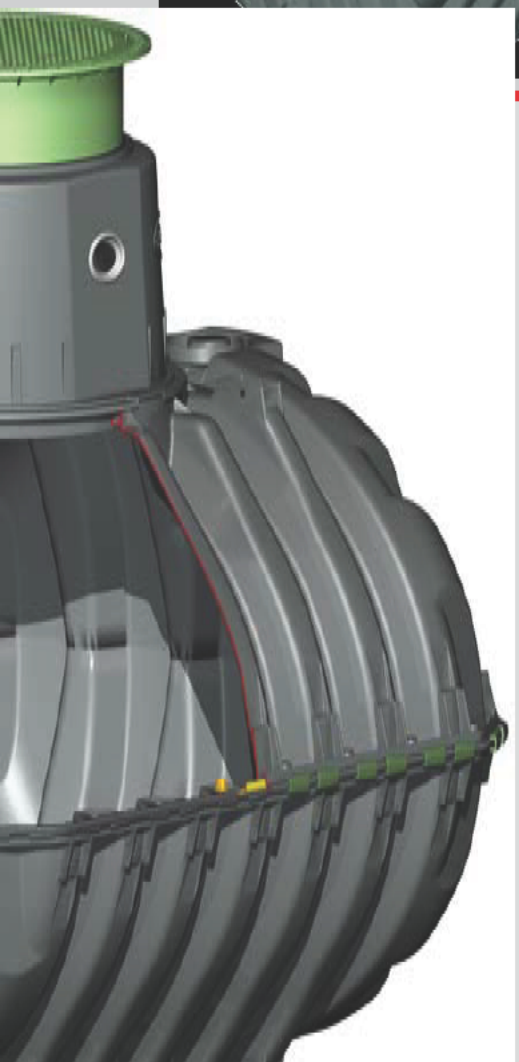



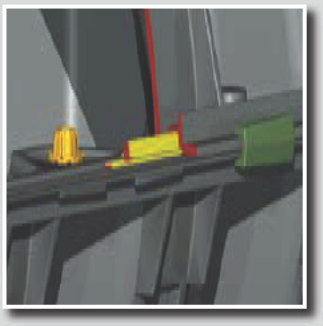

Logistical advantages of the Carat

The Carat tank consists of two half shells which can be stacked on top of each other, allowing multiple tanks to be stacked on a single pallet for shipping. For example, it is possible to stack five 6,500 ltr Carat tanks, or nine 2,700 ltr Carat tanks on a single pallet. This allows a standard 40 ft. shipping container to house a total tank volume of up to 130,000 ltrs! The tanks unique stacking feature directly reduces transport costs and environmental impact from vehicle emissions, whilst allowing shipments to any destination in the world.

Easy and safe assembly

- The patented quick connection (illustrated in green), allows the Carat tank to be assembled without screws in only few minutes. Disassembly is possible at any time.
- The first-class EPDM material used in the profile sealings (illustrated in yellow), has been laboratory tested to last more than 25 years.
- The centering bolt (illustrated in orange) assures the accurate and easy assembly of the two half shells preventing any leaks

The Carat

The first Rainwater underground tank of its kind!

Unique manufactu

The GRAF Carat undergro
other underground tank i
largest tank of its kind to
injection compression mo
provides the tank with ur
ensures that each compo
the highest of accuracy.

Unlike other undergroun
thickness is equal in all a
The production tolerance
minimum, resulting in a
quality, which is strong, a
and extremely user-frien

To manufacture the Cara
one of the worlds largest
tion moulding systems ha
to be developed.

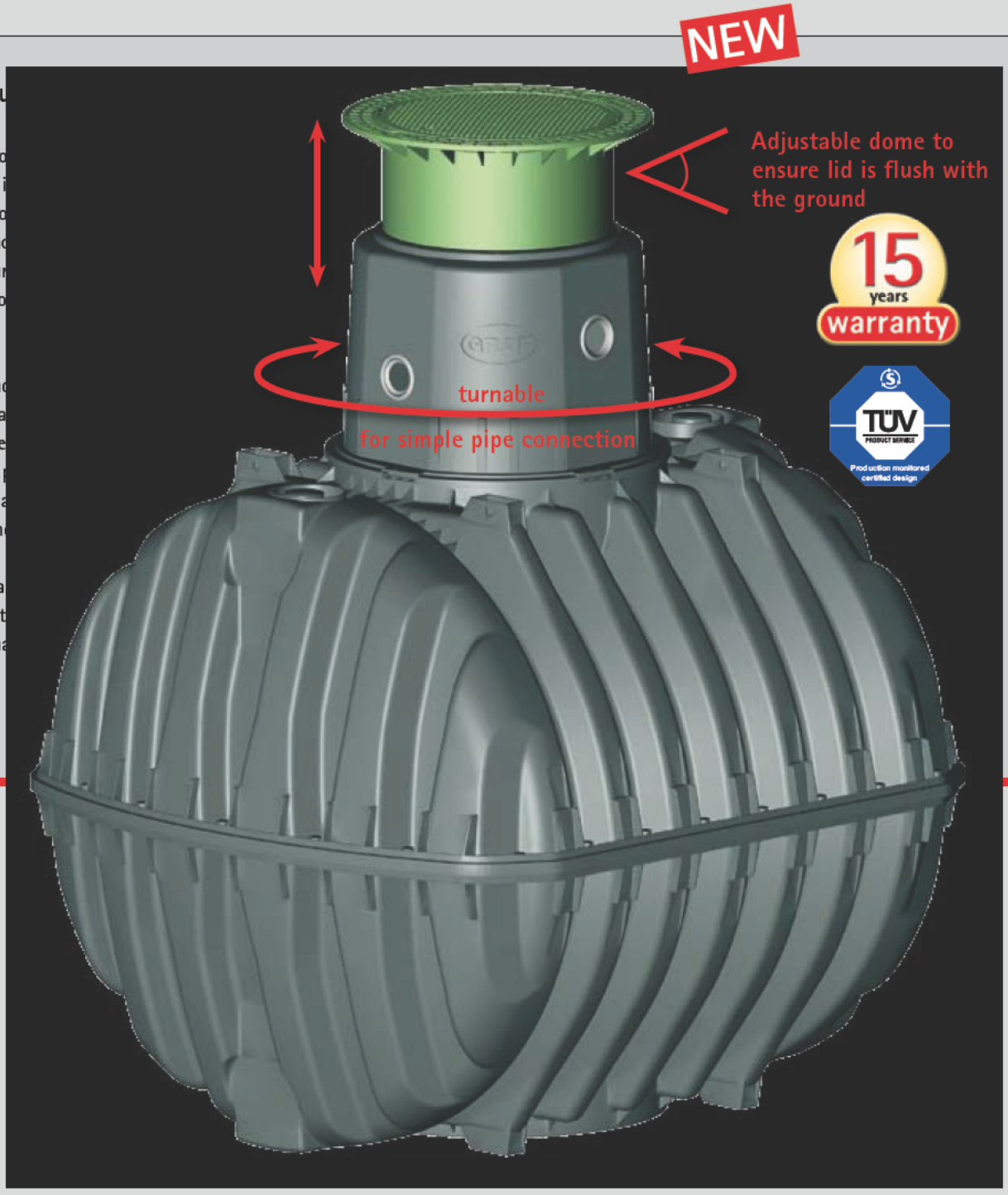

The Carat underground tank is made from Duralen®, a high quality material that is extremely rigid and impact resistant, therefore ideally suited for producing underground tanks. With very low warping characteristics and high stiffness, this material provides high stability and a unique life expectancy. Duralen® can also be easily recycled which reduces waste and environmental impact.

Duralen®

The modular Carat system

Choose your tank size

NEW

Carat, vehicle bearing underground tank

Size 2,700 – 13,000 litres
(700 – 3,400 US-Gallons).
Designed to be used in conjunction with the vehicle loading telescope dome shaft. The access dome is designed in accordance to DIN testing.

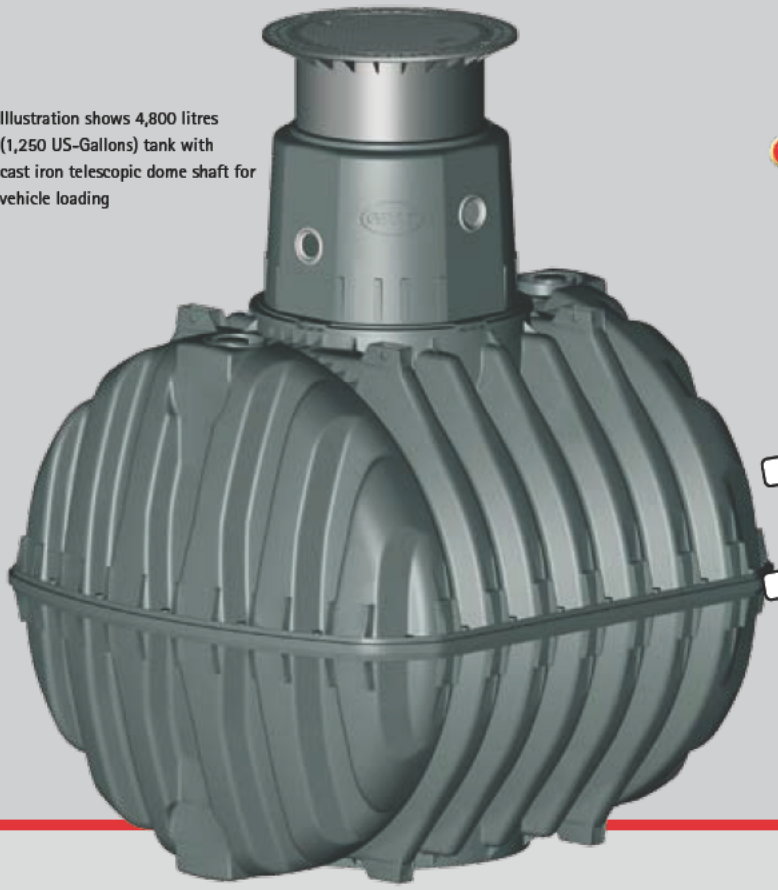

Illustration shows 4,800 litres (1,250 US-Gallons) tank with cast iron telescopic dome shaft for vehicle loading

15 years warranty

EINSTIEGSDOM nach DIN EINSTIEGSDOM

TÜV

European 0870877 Patent

US 5878907 Patent

Volume

Litres	US-Gallons
2,700	700
3,750	1,000
4,800	1,250
6,500	1,700
7,500*	2000*
9,600*	2,500*
13,000*	3,400*

* Set consisting of two Carat underground tanks

Technical data

Dimensions/weight	2,700 L 700 US-Gallons	3,750 L 1000 US-Gallons	4,800 L 1,250 US-Gallons	6,500 L 1,700 US-Gallons	7,500 L* 1,850 US-Gallons	9,600 L* 2,500 US-Gallons	13,000 L* 3,400 US-Gallons
Length	2,080 mm (81.9 inches)	2,280 mm (89.8 inches)	2,280 mm (89.8 inches)	2,390 mm (94.1 inches)	Set consisting of two Carat underground tanks		
Width	1,565 mm (61.6 inches)	1,755 mm (69.1 inches)	1,985 mm (78.1 inches)	2,190 mm (86.2 inches)			
Heigth (including tank dome)	2,010 mm (79.1 inches)	2,200 mm (86.6 inches)	2,430 mm (95.7 inches)	2,710 mm (106.7 inches)			
Height of tank dome	610 mm (24.0 inches)						
Internal Ø tank dome	800 mm (31,5 inches)						
Weight	120 kg (265 lbs.)	150 kg (331 lbs.)	185 kg (408 lbs.)	220 kg (485 lbs.)			
Load							
Max. axle load	Car-bearing				see 3,750 L tank	see 4,800 L tank*	see 6,500 L tank*
Earth covering	800 - 1,200 mm (31.5 - 47.2 inches)						
Groundwater							
Groundwater stable	up to the middle of the tank						
Required earth covering	800 mm (31.5 inches)				see 3,750 L tank	see 4,800 L tank	see 6,500 L tank



For dimensions see 3,750 L tank* | For dimensions see 4,800 L tank* | For dimensions see 6,500 L tank*

Garden Comfort package

The simple garden solution with submersible pump system



Carat Garden Comfort underground tank package

- Simple to install and use
- Use a simple hose connection socket and pressure sensitive pump for automatic water activation, purposely designed for the Gardena® system
- Low visual impact
- Reduces electricity consumption by using a pressure drop activation system, so that electricity is only used when required

Scope of supply

① Carat underground tank
② Mini telescopic dome shaft for pedestrian loading with an adjustable PE lid
③ Filter package 2, consisting of:
- Internal Universal Filter 3
- Inflow stilling system for controlling the water inflow
- Overflow siphon and rodent guard
- Spannfix pipe connection sleeve

④ Garden Comfort pump package, consists of:
- Integra-Duo® 1100 Submersible pump, with protection against dry running and automatic Start / Stop function
- Floating water extraction unit
- Water hose connection box
- 10 m of pressure hose

Volume

Litres	US-Gallons
2,700	700
3,750	1,000
4,800	1,250
6,500	1,700
7,500*	2,000*
9,600*	2,500*
13,000*	3,400*

* Set consisting of two Carat underground tanks

Vehicle loading version available on request

Eco-Plus package

The ideal solution for use in the home and garden

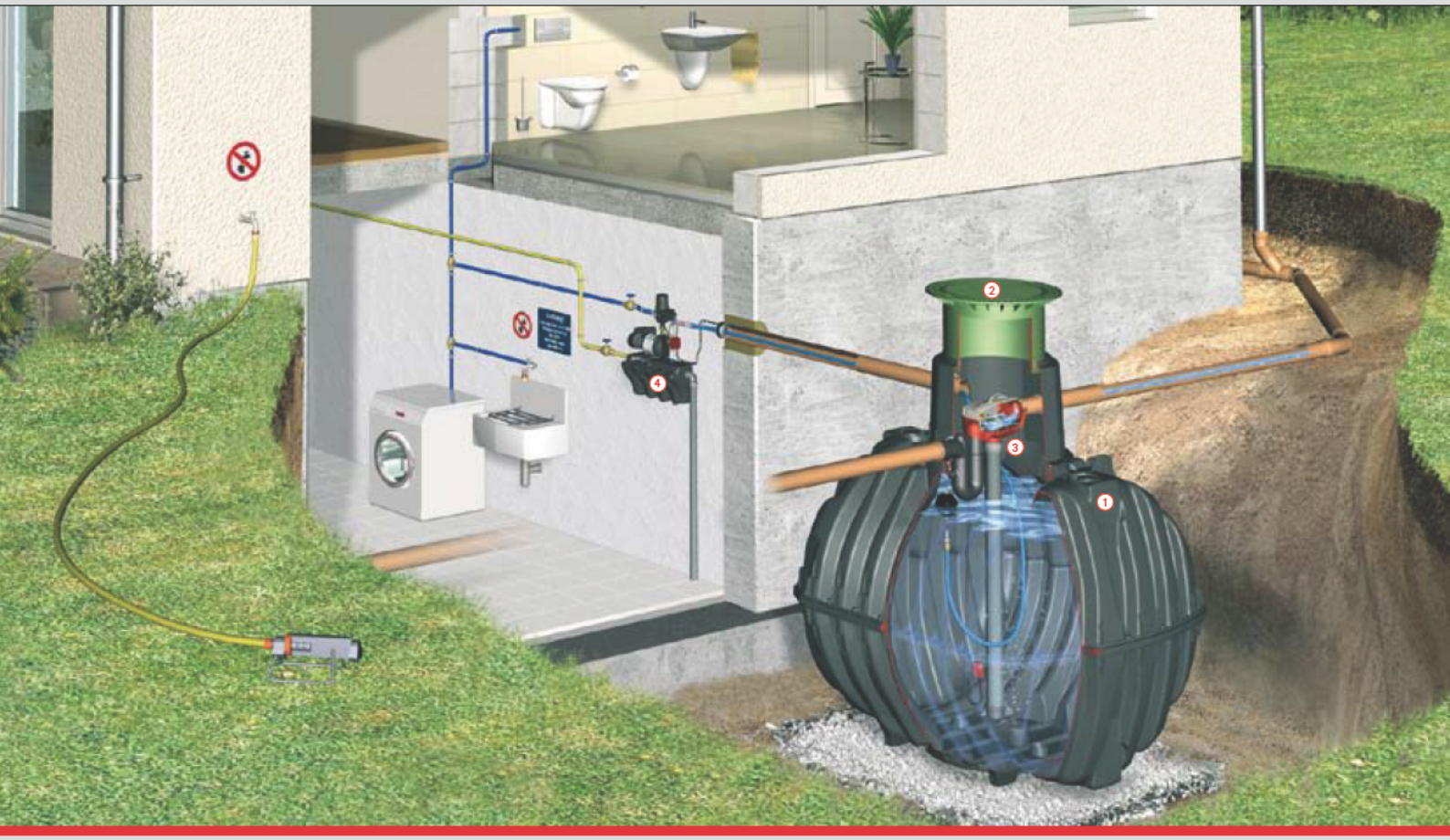

Carat underground tank package Eco Plus

- Economic package solution
- Patented filter technology and in-house pump system with automatic switch-over to mains water supply
- Easy to assemble due to modular components
- Float switch controlled
- Only one cover viewable on the surface

Scope of supply

① Carat underground tank
② Maxi telescopic dome shaft for pedestrian loading with an adjustable PE lid
③ Filter package 3, consisting of:
- Internal Optimax-Pro (self-cleaning) filter
- Inflow stilling system for controlling the water inflow
- Overflow siphon and rodent guard
- Spannfix pipe connection sleeve

④ Eco-Plus pump package consists of:
- Water supply control unit
- Floating water extraction unit
- DN 100 wall duct
- Labelling set
- Suction pipe

Volume

Litres	US-Gallons
3,750	1,000
4,800	1,250
6,500	1,700
7,500*	2,000*
9,600*	2,500*
13,000*	3,400*

*Set consisting of two Carat underground tanks

Vehicle loading version available on request

Internal filter technology

NEW

Efficient cleaning system with high water yield

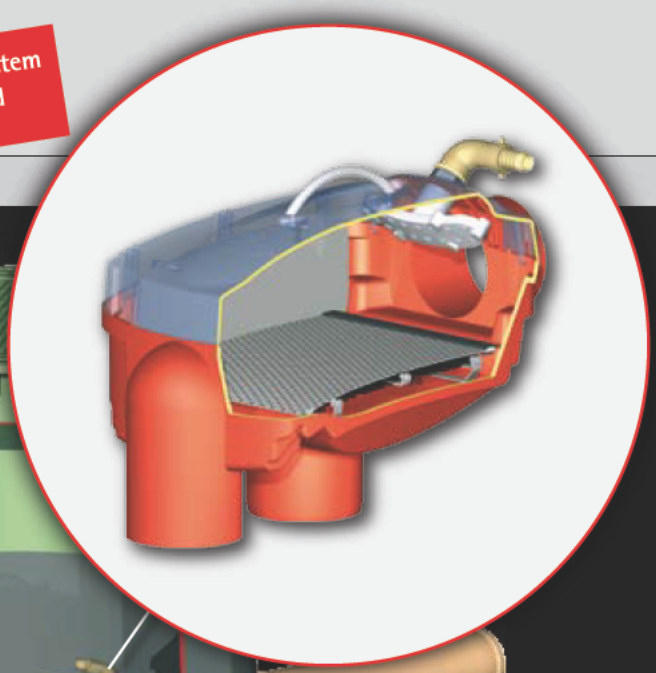

Universal Filter 3

up to 100% water yield

Advantages

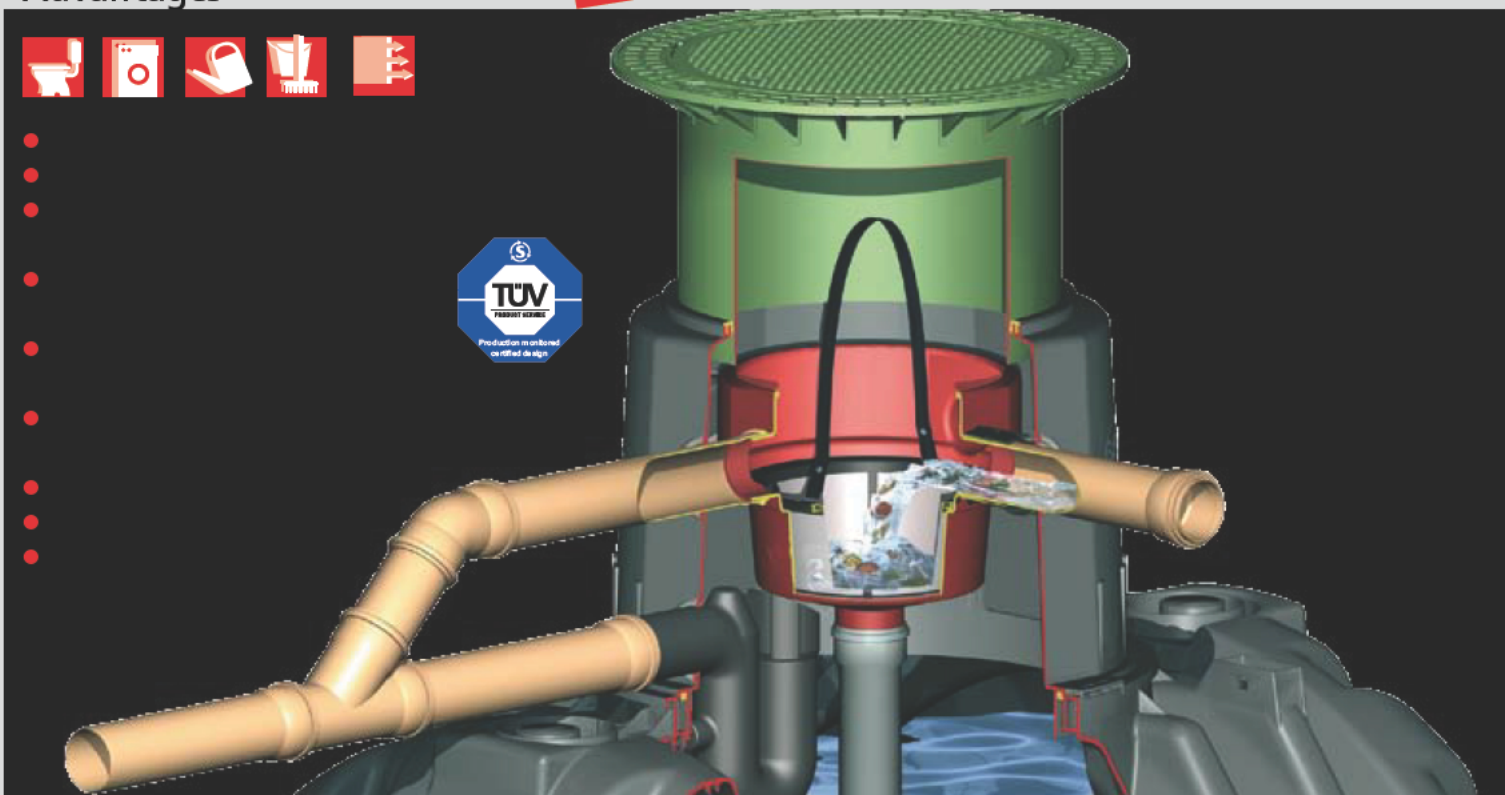

GRAF – Setting the standards in quality



Production site at Teningen (Germany) near Freiburg



Production site at Dachstein (France)

High Quality Manufacturing

GRAF has invested more than € 20 million in a new production site specially set up for the new CARAT range. The new facility has an approximate surface area of 155,000 m² - that equals 31 football pitches - one of the most modern production facilities for plastic products in the world

For over 40 years, Otto Graf GmbH has been offering high-class plastic products to its customers. In 1974 GRAF developed its first pioneering range of rainwater harvesting products. Now GRAF is recognised as Germany's number one rainwater harvesting brand and proudly presents the new premium Carat range of the tanks. A range which is manufactured in one of the most modern and efficent plastic manufacturing facilities in the world!

RAINWATER HARVESTING



STORMWATER MANAGEMENT



AGRICULTURAL CONTAINERS



SEWAGE TREATMENT PLANTS



Warranty clause:
The warranty mentioned in this brochure only refers to the tank in question and not to the accessories. Within the warranty period we grant free replacement of the material. Further benefits are excluded. Pre-condition for warranty benefits are proper handling, assembly and installation according to the mounting guidelines.

N.B. Protect tanks from frost when installed above-ground! In case of groundwater installation, please contact us for further information previous to the purchase!

For all indications of measurements in this brochure we reserve a tolerance of +/- 3%. The useful volume of the tanks may be up to 10% lower than the tank capacity, according to the connecting option.

Technical modifications and further development of the different products are subject to change. Errors excepted.

Otto Graf GmbH
Kunststofferzeugnisse
Carl-Zeiss-Straße 2-6
79331 Teningen / Germany

Phone: + 49 (0) 76 41/5 89 - 0
Fax: + 49 (0) 76 41/5 89 - 50
info@graf-online.de
www.graf-online.de

Over 40 years of quality and innovation

© Otto Graf GmbH, Teningen. Germany
Reproduction – also in extracts – only with written authorisation.

8.5 Appendix E:

Potential Washing Machine data sheet – Fisher & Paykel WM1490F1 9kg:

Model	Cycle	Temp. (°C)	Load (kg)	Program Time On Display (min)	Remaining Moisture Content (%)	Energy Consumption (kWh/Cycle)	Water Consumption (L/Cycle)
WM1490F	Cottons Eco*	60	9	198	47	0.67	50
	Cottons	40	9	138	56	1.17	84
	Everyday	40	8	59	48	0.81	96
	Heavy	60	8	130	48	2.19	115
	Synthetic	40	4	121	40	0.98	53
	Delicate	40	4	45	65	0.70	65
	Sports	40	4	50	43	0.55	56

8.6 Appendix F:

Dish Washer Data Sheet – Bosch SMS6EDI02G:

Product information sheet COMMISSION DELEGATED REGULATION (EU) 2019/2017				
Supplier's name or trade mark [a] [b] :	Bosch			
Supplier's address [a] [b] :	BSH Hausgeräte GmbH, Carl-Wery-Str. 34, 81739 Munich, Germany			
Model identifier [a] :	SMS6EDI02G			
General product parameters:				
Parameter	Value	Parameter	Value	
Rated capacity [d] (ps)	13	Dimensions in cm [a] [b]	Height	85
			Width	60
			Depth	60
EEI [d]	44	Energy efficiency class [d]	C [c]	
Cleaning performance index [d]	1.121	Drying performance index [d]	1.061	
Energy consumption in kWh [per cycle], based on the eco programme using cold water fill. Actual energy consumption will depend on how the appliance is used.	0.736	Water consumption in litres [per cycle], based on the eco programme. Actual water consumption will depend on how the appliance is used and on the hardness of the water.	9.5	
Programme duration [d] (h:min)	4:35	Type	Freestanding	
Airborne acoustical noise emissions [d] (dB(A) re 1 pW)	46	Airborne acoustical noise emission class [d]	C [c]	
Off-mode (W) (if applicable)	-	Standby mode (W) (if applicable)	0.50	
Delay start (W) (if applicable)	4.00	Networked standby (W) (if applicable)	2.00	
Minimum duration of the guarantee offered by the supplier [a] [b] :			24 months	
Additional information [a] [b] :				
Weblink to the supplier's website, where the information in point 6 of Annex II to Commission Regulation (EU) 2019/2022 is found: www.bosch-home.com/energylabel				

WATER for LIFE from Southern Water

MRS VICKY O'FARRELL
FRITHKNOWLE FARM
PICTS LANE
COWFOLD
RH13 8AN

Visit our website for live chat or to log into your account
southernwater.co.uk/help

0330 303 0277
Weekdays - 8am to 7pm
Saturday - 8.30am to 2pm

Your customer number [redacted]

Your payment reference [redacted]

Dear Mrs VICKY O'FARRELL,

Here's your latest bill based on the meter reading we estimated on 09 September 2022. You currently pay by Direct Debit, so you don't need to do anything – your payments will be taken automatically.

Meter reading

Water used in cubic metres

41 m³

One cubic metre = 1,000 litres
This is equivalent to: 11 baths, 31 (4 min) showers or 166 toilet flushes

Meter number: 86036580

Latest reading: 9 Sep 2022

		9	9	7	5	.	0	0

Previous reading: 12 Apr 2022

		9	9	3	4	.	0	0

Your next meter reading is scheduled to take place by 28 Mar 2023

Previous bill's usage
27.00 m³

Charges

[redacted]

Bill date
21 Sep 2022

Billing period
From: 12 April 2022
To: 09 September 2022

Bill type
Metered - Direct Debit

Previous bill's charges
£0.00

Future payments

Next monthly payment

[redacted]

3 Oct 2022

For full list of future payments, see Your payment summary.

Struggling to pay? See p. 3

Previous bill's payments
[redacted] monthly

Water

Period: 12 April 2022 to 09 September 2022

Variable Rate	[redacted]	x	41.00m³ =	[redacted]
Standing Charge			=	[redacted]
Total Water				[redacted]

Wastewater

Southern Water only supplies your water – we don't take wastewater away from your property.

So, you don't receive any wastewater charges from us.

Standing Charge:
This covers essential service costs such as sending bills, collecting payments and dealing with enquiries.

1214 - M - Document 1 of 1 - 22092022 - 4639019 - 4639057

Your account summary

What you've paid since your last bill	[redacted] Credit
What you've been charged for From 12 April 2022 to 09 September 2022	[redacted]
Outstanding Balance	[redacted]

Your payments summary

Past monthly payments	
16 May 2022	[redacted]
1 Jun 2022	[redacted]
1 Jul 2022	[redacted]
1 Aug 2022	[redacted]
1 Sep 2022	[redacted]
Total	[redacted]

Future monthly payments	
3 Oct 2022	[redacted]
1 Nov 2022	[redacted]
1 Dec 2022	[redacted]
3 Jan 2023	[redacted]
1 Feb 2023	[redacted]
1 Mar 2023	[redacted]
3 Apr 2023	[redacted]
2 May 2023	[redacted]
1 Jun 2023	[redacted]
3 Jul 2023	[redacted]
1 Aug 2023	[redacted]
1 Sep 2023	[redacted]
2 Oct 2023	[redacted]
Total	[redacted]

Your water use

Over the last five months your household used an average of 272 litres a day

You're using [redacted] of water a day on average.

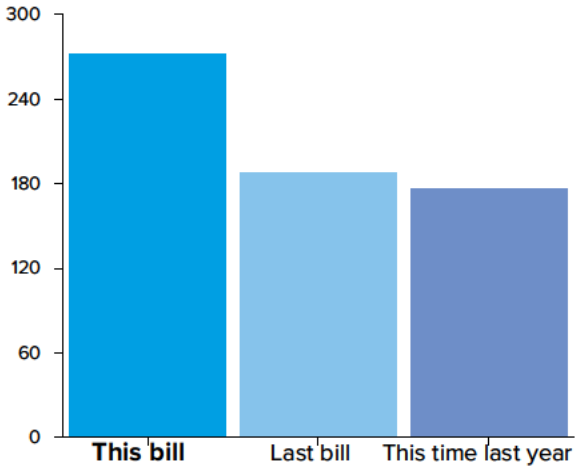

Why is my bill higher than usual?

Your water use may have gone up for a number of reasons, for example:

- Are more people living in your home?
- Have you been spending more time at home than usual?
- Have you had problems such as a dripping tap or leaking washing machine?
- Have you carried out building work, repairs or home improvements?
- Have you used your washing machine more than usual?
- Have you regularly used a hosepipe or sprinkler?
- Have you regularly filled up a paddling pool?
- Have you installed appliances or equipment that uses a lot of water?

If none of the above explains why your water use has gone up, call us on **0330 303 0277**. We'll try to help you work out why your bill is higher than usual.

WATER for LIFE from Southern Water

Visit our website for live chat or to log into your account
southernwater.co.uk/help

0330 303 0277
Weekdays - 8am to 7pm
Saturday - 8.30am to 2pm

MRS VICKY O'FARRELL
FRITHKNOWLE FARM
PICTS LANE
COWFOLD
RH13 8AN

Your customer number [redacted]

Your payment reference [redacted]

Dear Mrs VICKY O'FARRELL,

Here's your latest bill based on the meter reading we estimated on 31 March 2023. You currently pay by Direct Debit, so you don't need to do anything – your payments will be taken automatically.

Meter reading

Water used in cubic metres

52 m³

One cubic metre = 1,000 litres
This is equivalent to: 11 baths, 31 (4 min) showers or 166 toilet flushes

Meter number: 86036580

Latest reading: 31 Mar 2023

2 6 . 5 0

Previous reading: 9 Sep 2022

9 9 7 5 . 0 0

Your next meter reading is scheduled to take place by 26 Sep 2023

Previous bill's usage
41.00 m³

Charges

[redacted]

Bill date
11 Apr 2023

Billing period
From: 10 September 2022
To: 31 March 2023

Bill type
Metered - Direct Debit

Previous bill's charges
[redacted]

Future payments

Next monthly payment

[redacted]

2 May 2023

For full list of future payments, see Your payment summary.

Struggling to pay? See p. 3

Previous bill's payments
[redacted] monthly

Water

Period: 10 September 2022 to 31 March 2023

Variable Rate	[redacted] x	51.50m³ =	[redacted]
Standing Charge		=	[redacted]
Total Water			[redacted]

Wastewater

Southern Water only supplies your water – we don't take wastewater away from your property.

So, you don't receive any wastewater charges from us.

Standing Charge:
This covers essential service costs such as sending bills, collecting payments and dealing with enquiries.

If you would like to know more about how we calculate our charges, please go to **www.southernwater.co.uk/account/how-we-calculate-your-bill**

1416 - M - Document 1 of 1 - 12042023 - 5254462 - 5254516

STA-SWF138-2-1220

Your account summary

Balance brought forward from your last bill	[redacted]
What you've paid since your last bill	[redacted] Credit
What you've been charged for From 10 September 2022 to 31 March 2023	[redacted]
Outstanding Balance	[redacted]

Your payments summary

Past monthly payments	
3 Oct 2022	[redacted]
1 Nov 2022	[redacted]
1 Dec 2022	[redacted]
3 Jan 2023	[redacted]
1 Feb 2023	[redacted]
1 Mar 2023	[redacted]
3 Apr 2023	[redacted]
Total	[redacted]

Future monthly payments	
2 May 2023	[redacted]
1 Jun 2023	[redacted]
3 Jul 2023	[redacted]
1 Aug 2023	[redacted]
1 Sep 2023	[redacted]
2 Oct 2023	[redacted]
Total	[redacted]

Your water use

Over the last six months your household used an average of 254 litres a day

You're using [redacted] of water a day on average.

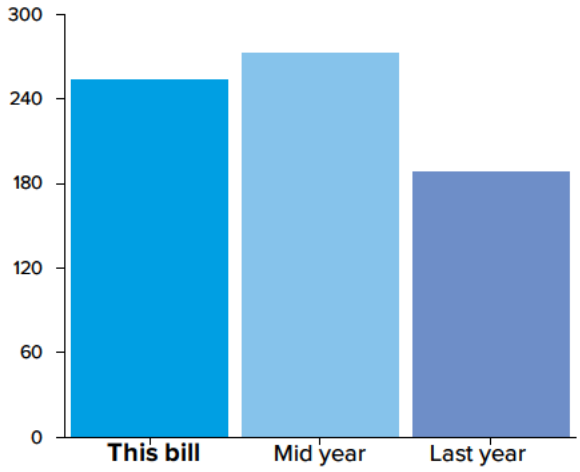

Your water meter is read twice a year. We can read most meters from the street – so you may not have noticed when we read yours.



8.7 Appendix G:

Existing Water Bills: