Nu-Heat
Feel the difference

Information sheet

NIBE F2050 air source heat pumps from Nu-Heat



Air source heat pumps designed to provide an efficient, low-carbon solution for space heating and domestic hot water.

NIBE air source heat pump range

Swedish company, NIBE, has been manufacturing heat pumps globally for 40 years. Their industry-leading air source heat pumps not only look great, they also offer the highest levels of performance and functionality.

NIBE ASHP range features

- Incredibly quiet thanks to Owl Wing fan design, producing maximum sound power levels as low as 53 decibels
- More climate-friendly refrigerant
- Intuitive control with smart connectivity
- Compact units available in two sizes: 6kW and 10kW
- Cascade and hybrid options to suit a wide range of properties
- MCS approved for Boiler Upgrade Scheme applications
- 7-year warranty when commissioned by a Nu-Heat engineer
- Pair with our EnergyPro® cylinders for domestic hot water

Smart connectivity with NIBE Uplink™ and myUplink™

When connected to the internet, NIBE Uplink™ and new, smart myUplink™, provides a quick and simple way to monitor and control the heat pump and feedback on system performance.

It's intuitive to use, meaning that you can optimise the air source heat pump's energy consumption, keep an eye on running costs and create the perfect level of comfort in the home.

Why choose a heat pump from Nu-Heat?

As a MCS accredited company, we know what it takes to design an efficient system that effectively heats a home, whilst also keeping running costs low.

Our systems include tailored project schematics and all system components and fittings as standard, for a quick and smooth installation that is backed up with lifetime technical support.

Bespoke heating design

Seamlessly integrating the air source heat pump and underfloor heating

Long 7-year warranty

Benefit from a 7-year warranty, full parts and labour, when commissioned by a Nu-Heat engineer

Supporting BUS applications

Access the BUS with our MCS support package which includes on-site commissioning

Free lifetime support

We support Nu-Heat systems for life, so you can always call on us for technical support

Award-winning customer service

Proud to hold a Distinction from the Institute of Customer Service

Typical system schematic

1. NIBE F2050 air source heat pump
2. SMOS40 or SMO20 controller
3. EnergyPro® HP cylinder
4. Buffer tank
5. Domestic hot water out
6. Balanced cold out
7. Mains cold in
8. Heating flow and return

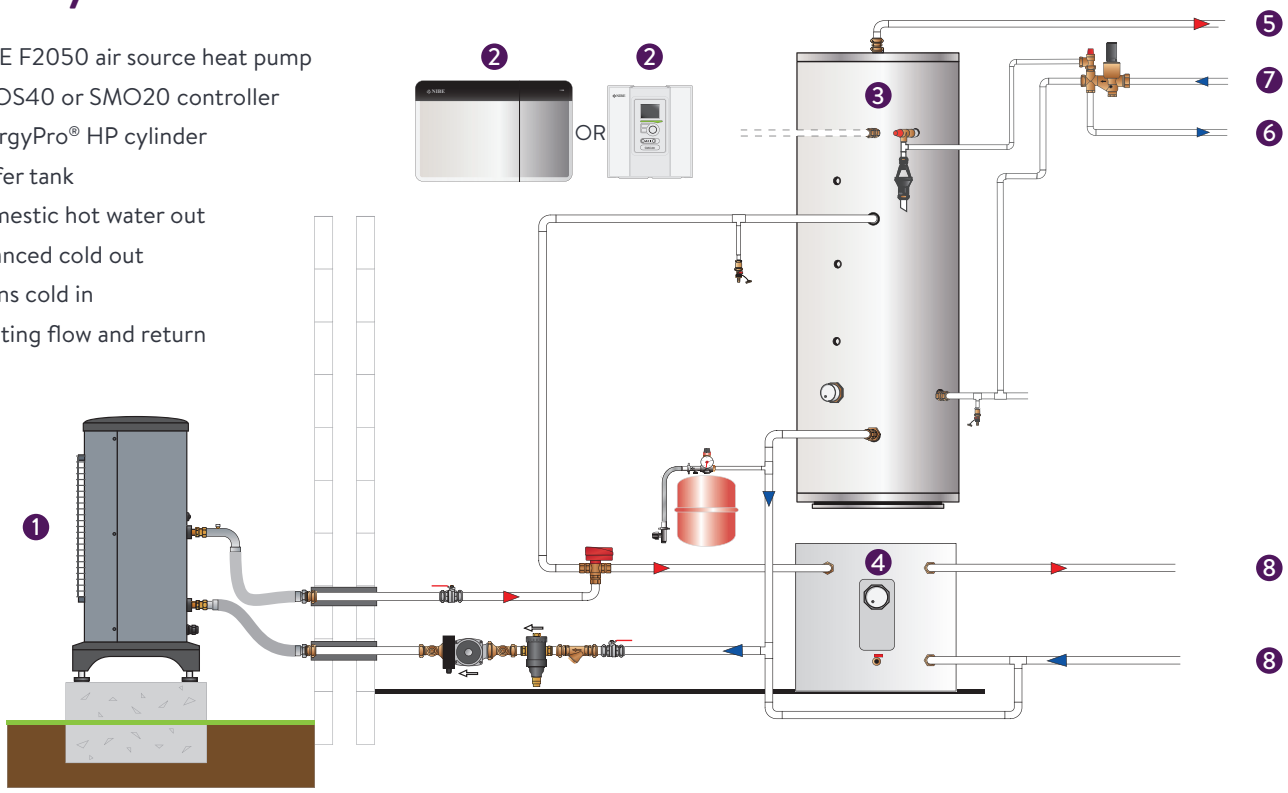

Which unit will I need?

We will take factors such as the size of the property, location and domestic hot water demand into account to select the right size heat pump for the project.

Technical specification

Model	F2050-6	F2050-10
CoP at 7/35°C*	5.41	5.33
Operating voltage	230V 50Hz	
Max. outgoing heating medium temp.	58°C	
Type of refrigerant	R32	
Height with stand (mm)	781 (+10/-0)	895 (+10/-0)
Width (mm)	993	1035
Depth (mm)	383	422
Weight (kg)	76	83
Sound power level (dB(A))**	53	53

* In accordance with EN 14511 for heat source entry at 7°C / hot water flow at 35°C.

** Sound power level, $L_W(A)$ according to EN12102

Positioning the unit

NIBE air source heat pumps can be installed on almost any kind of terrain and are supplied in a range of sizes to suit small, medium or large homes and even light commercial buildings.

- Place F2050 outdoors on a solid level base, preferably a concrete foundation; do not place it directly on a lawn or other non-solid surface. If used, concrete slabs must rest on tarmac or gravel.
- The foundation should be positioned so that the lower edge of the evaporator is at a minimum of 300mm above ground level. Areas that are prone to standing water or heavy snow should take this into consideration when selecting the appropriate height above ground level.
- The F2050 should not be positioned next to a habitable room or to inconvenience neighbours. We can help calculate this to meet MCS020
- Condensation water should be directed to a drain or similar.
- Positioning should be in accordance with local planning guidance.

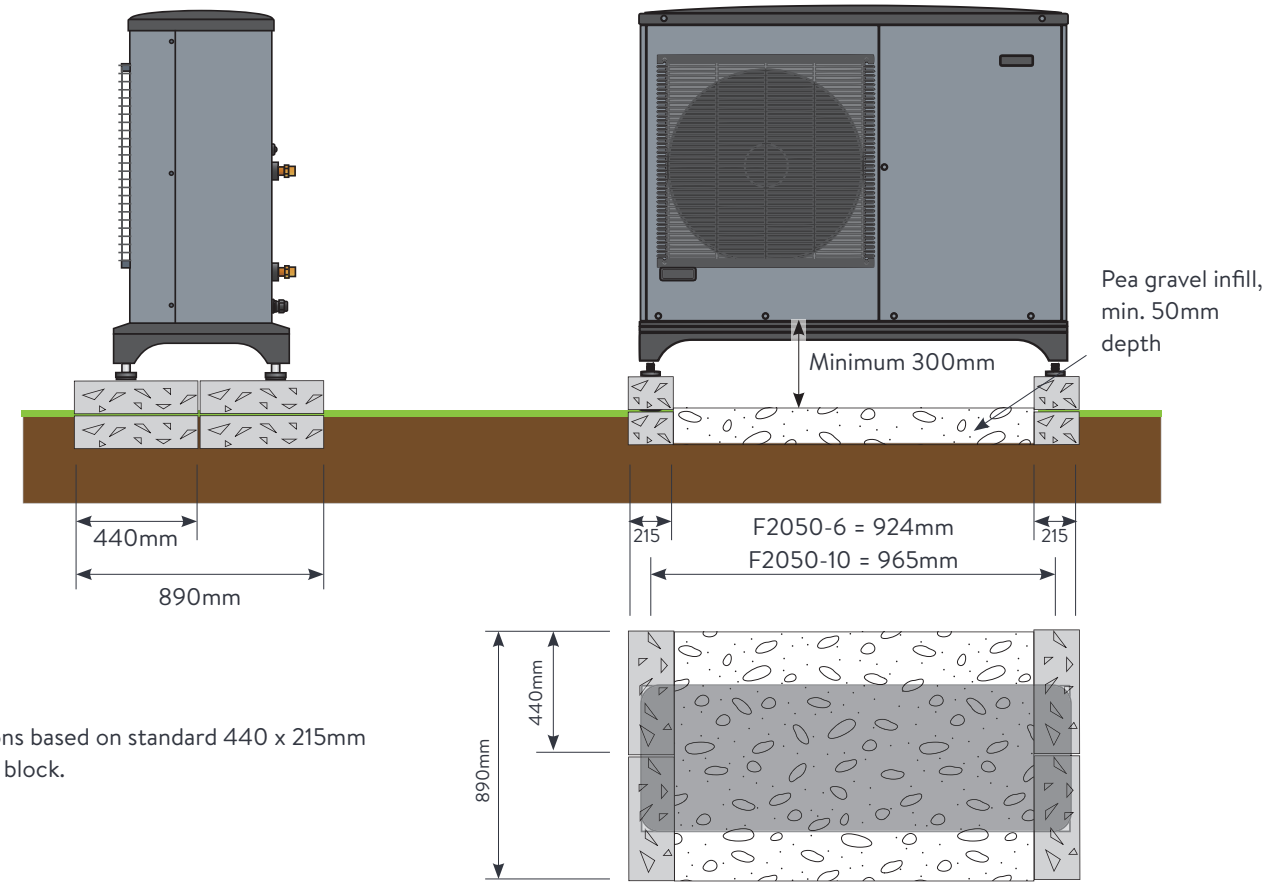

Dimensions based on standard 440 x 215mm concrete block.

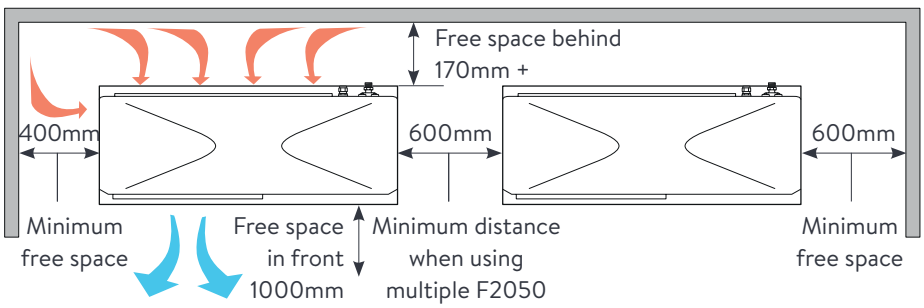

Distance from the property

For a heat pump using 32mm (DN25) insulated plastic pipe connections between the heat pump and property the maximum distance permitted is shown in the table. This will be checked at the design stage. If your project falls outside these criteria please speak to your Project Engineer.

For full details please refer to the NIBE F2050 Installation Manual available at www.nibe.co.uk.

Heat Pump	Max Distance
F2050-6	99m
F2050-10	99m

Energy efficiency fiche

Model	F2050-6		F2050-10	
Temperature application (°C)	35	55	35	55
Seasonal space heating energy efficiency class, average climate	A+++	A++	A+++	A++
Rated heat output, average climate (kW)	5	6	6	
Annual energy consumption for space heating, average climate (kWh)	2116	3250	2834	3961
Seasonal space heating energy efficiency, average climate (%)	200	139	181	132
Sound power level LWA indoors (dB)	-			
Rated heat output, cold climate (kW)	6		7	6
Rated heat output, warm climate (kW)	6	5	7	
Annual energy consumption for space heating, cold climate (kWh)	3487	4604	4059	5204
Annual energy consumption for space heating, warm climate (kWh)	1110	1617	1379	1964
Seasonal space heating energy efficiency, cold climate (%)	161	119	155	114
Seasonal space heating energy efficiency, warm climate (%)	265	178	260	177
Sound power level L_W(A) outdoors (dB(A))*	53		53	

* Sound power level, L_W(A) according to EN12102