Dear Conservation Officer,

Thank you for your valuable feedback on the current planning application. I want to assure you that I am very mindful of the importance of integrating the extension tastefully within the conservation area. Taking your advice into account, I have removed the sky lantern from the original design. I believe the updated proposal respects and preserves the existing character of the building as much as possible.

Below are additional details you mentioned, which I hope will further reassure you of my intention to create a tasteful and sensitive addition to the house.

Window cills

- Natural stone cills will be used to match the existing cills in the house. Colour in neutral beige to be sympathetic to the building character.



Figure 1. Example of an existing stone cill.

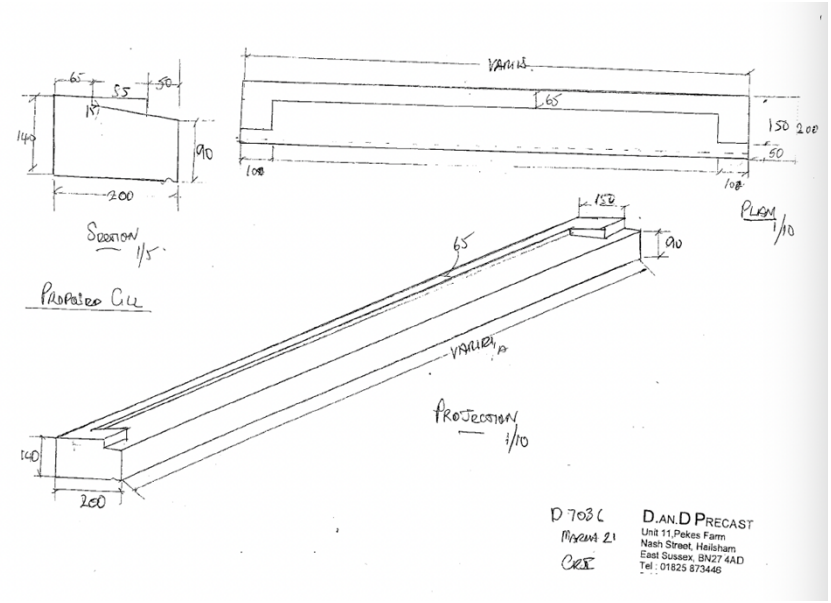

Figure 2. Proposed stone cill design drawing matching the existing ones.

Windows

- UPVC windows will be used to ensure EPC requirements are met (the existing ones are also UPVC windows). The style and colour will be exactly matched to the existing windows.

- Brick works including arch above the windows will be matched to the existing style and colour. The arch will be the same size and shape to the original design to perfectly fit the conservation area.



Figure 3. Existing UPVC windows.

Entrance door

- Solid wooden door will be used and brick works including arch above the door opening and surrounding bricks pattern and colour will be matched to the existing style.

Roof

- Please see updated plans elevation file for rood design details.
- The roof material will be GRP but architrave slate grey in colour and trims will be used to mimic the appearance of traditional lead roofing (Figure 4).
- Eaves will be made with natural wood, sympathetic to the existing building.
- Verges will be 100 mm high; material will be GRP but in colour to look like lead roof to blend well with existing building.
- There will be no barge boards to keep the design minimally intrusive.



Figure 4. An example of GRP roof in architrave slate grey colour with expansion trim looking close to traditional lead roofing.