



aegaea
water, civils and environment

Drainage Strategy
7554_RH20_Pulborough_07

Site Address: Parsons Field Stables
Pickhurst Lane
Pulborough
RH20 1DA

UK Experts in Flood Modelling, Flood Risk Assessments, and Surface Water Drainage Strategies

aegaea
water, civils and environment

Document Issue Record

Project: Drainage Strategy

Prepared for: Manorwood Construction Limited

Reference: 7554_RH20_Pulborough_07

Site Location: Parsons Field Stables, Pickhurst Lane, Pulborough, RH20 1DA

Issue	Date	Author	Check	Auth.	Comments
1	28/03/2025	Ceri Metcalfe	Daniel Buciak	James Mahoney	First issue

Please Note:

This report has been prepared for the exclusive use of the commissioning party and may not be reproduced without prior written permission from Aegaea Civil Engineering Limited. All work has been carried out within the terms of the brief using all reasonable skill, care, and diligence. No liability is accepted by Aegaea Civil Engineering Limited for the accuracy of data or opinions provided by others in the preparation of this report, or for any use of this report other than for the purpose for which it was produced. Where reference has been made to probability events, or risk probability, it does not ensure that there is no risk or that there is no residual risk from an extreme, unlikely or unforeseen flood event over the lifetime of the development.

Table of Contents

1. Introduction 1

Site Overview 1

Development Proposals 2

Ground Conditions 2

2. Surface Water Drainage Strategy 3

Existing Drainage System 3

Proposed Drainage Hierarchy 3

Proposed Drainage Strategy 4

3. Future Maintenance Strategy 5

Permeable Paving 6

4. Pollution Prevention & Water Quality Management 8

SuDS Mitigation Indices 8

5. Foul Drainage Strategy 9

Appendix A - Topographical Survey 10

Appendix B - Proposed Site Layout 11

Appendix C - Proposed Drainage Layout 12

Appendix D - Drainage Calculations 13

aegaea

water, civils and environment

1. Introduction

1.1. Aegaea were commissioned by the Client to prepare a Drainage Strategy to support a planning application associated with the proposed development at the below address.

Site Overview

1.2. The site of the proposed development is Parsons Field Stables, Pickhurst Lane, Pulborough, RH20 1DA.

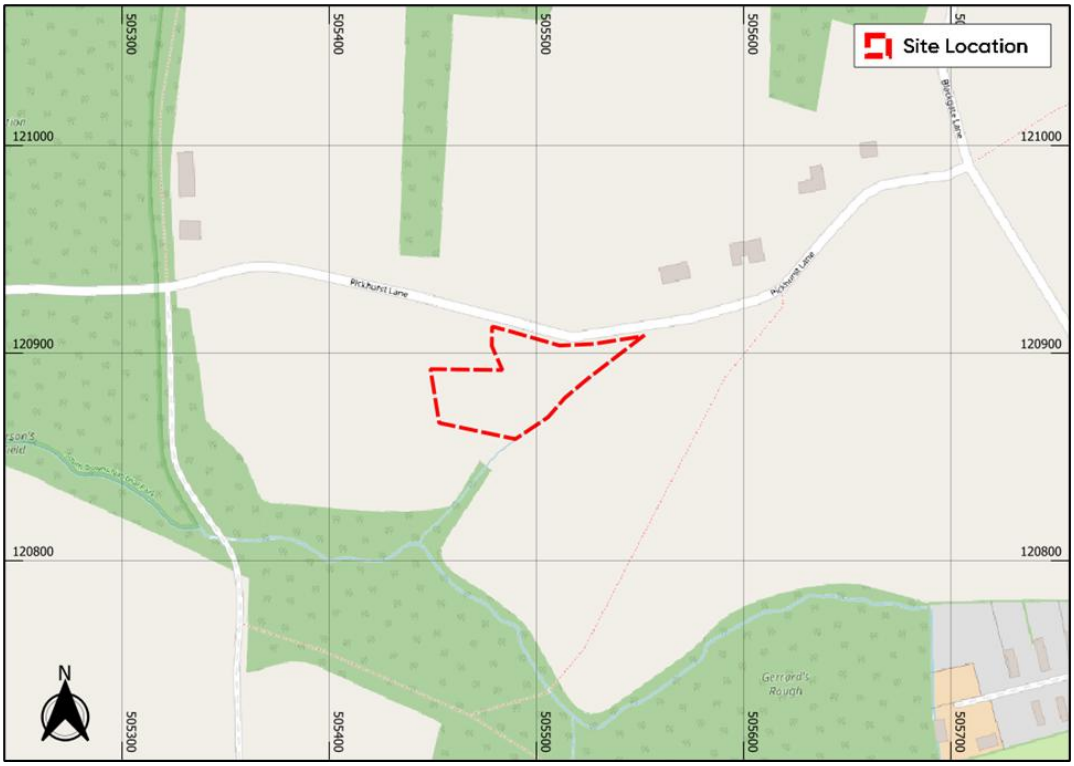

Figure 1: Site Location

1.3. The proposed development site measures approximately 2,480m^2 (0.248ha), situated and accessed from Pickhurst Lane to the north of the site.

1.4. The topographical survey is included in Appendix A, which illustrates that existing site levels vary between 21.468m Above Ordnance Datum (AOD) north east of the site and 18.839m AOD to the south west.

1.5. Horsham District Council is the Local Planning Authority (LPA) for the site and West Sussex County Council is the designated Lead Local Flood Authority (LLFA).

Development Proposals

1.6. The proposed development comprises of stationing of 2 additional static caravans for residential purposes and the erection of a stable building for private use together with the formation of hardstanding and associated landscaping.

1.7. The proposed development layout can be seen in Figure 2 below and is contained within Appendix B.

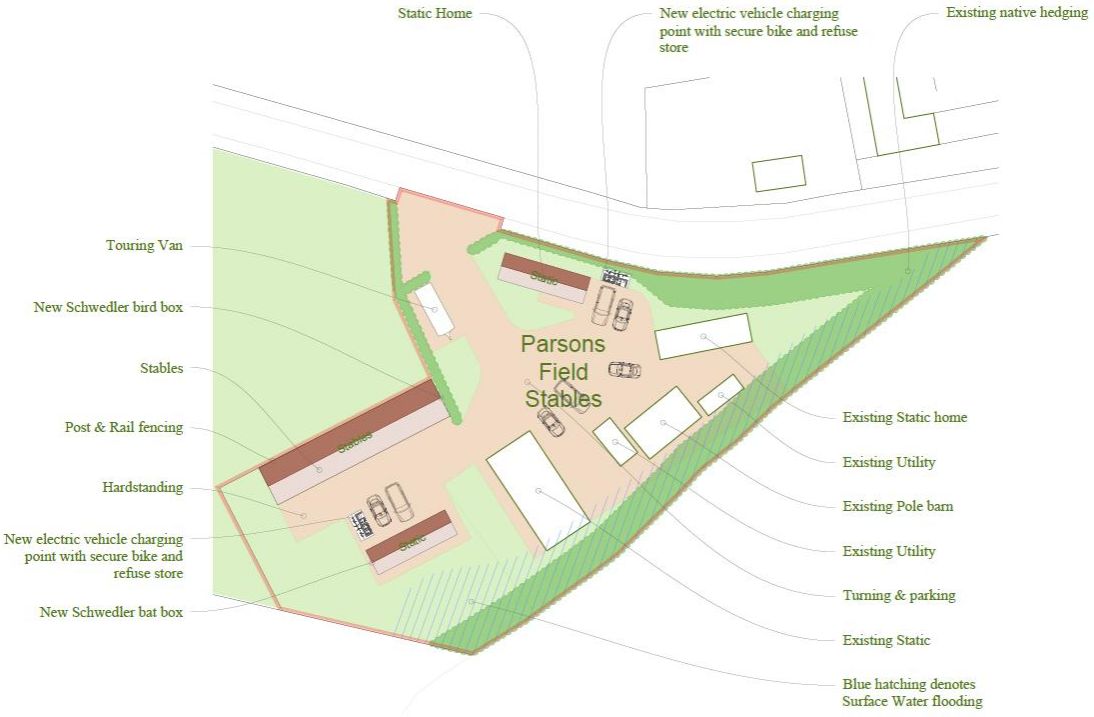

Figure 2: Proposed Site Plan

Ground Conditions

1.8. A review of readily available information indicates that the site is in an area of slowly permeable seasonally wet slightly acid but base-rich loamy and clayey soils with impeded drainage (Soilscapes soil types viewer). British Geological Survey (BGS) data indicates that the bedrock underlying the site is Weald Clay Formation.

1.9. Based on the above, it is considered that the disposal of surface water via infiltration is not feasible and an alternative strategy in line with the SuDS hierarchy is to be sought.

2. Surface Water Drainage Strategy

Existing Drainage System

2.1. No information regarding the existing onsite drainage system has been provided, however, it is assumed that surface water drainage currently discharges via gravity to the ditch located along the southern site boundary.

2.2. Further site investigations would be required to determine existing arrangements.

Proposed Drainage Hierarchy

2.3. Current guidance indicates that the following surface water disposal options should be considered, listed in order of preference:

i. **Disposal via rainwater harvesting:** It is proposed that surface water runoff from the roof of the proposed stable is to be utilised via a rainwater harvesting system.

ii. **Disposal via on-site infiltration systems:** As mentioned above, infiltration has been discounted.

iii. **Disposal to a watercourse/surface water body:** There is an existing drainage ditch that runs along the southern boundary of the site which it is proposed that surface water flows are to discharge to.

iv. **Disposal to surface water sewer:** There are no public surface water sewers within the proximity of the proposed development.

v. **Disposal to combined sewer:** There are no public surface water sewers within the proximity of the proposed development.

2.4. In accordance with the SuDS hierarchy, it is proposed that surface water flows from part of the development are to be re-used within a rainwater harvesting system. The remaining of the developments surface water flows are to discharge at a controlled rate into the existing ditch along the southern site boundary.

Proposed Drainage Strategy

2.5. The use of a rainwater harvesting system has been proposed for the reuse of surface water flows from the proposed stables building. Refer to the Water Neutrality Statement produced by Motion for rainwater harvesting calculations and information.

2.6. The use of permeable paving has been proposed to filter water and improve water quality of surface water flows for the proposed development, prior to discharging at a controlled rate into an existing ditch running along the southern site boundary.

2.7. Where a site is below 1ha and greenfield runoff rates are low, it is considered that 1 l/s forms a practical minimum flow rate that balances and mitigates both the increased flood risk and blockage risk to the proposed drainage system. It is therefore proposed to restrict flows to 1 l/s as an appropriate minimum flow for small sites.

2.8. All on site drainage has been designed to accommodate surface water runoff from all proposed impermeable areas on site, including all modelled 1 in 100-year storms plus 45% climate change.

2.9. The proposed drainage layout can be found within Appendix C with supporting drainage calculations can be found in Appendix D.

3. Future Maintenance Strategy

General Maintenance

3.1. The surface water drainage network will be managed throughout the lifetime by the owners of the proposed development in accordance with details set out below.

3.2. All drainage, whether piped or SuDS require regular maintenance. The tables below provide an overview of general maintenance tasks and frequency of which they need to be undertaken.

Maintenance Schedule	Required Action	Typical frequency
Regular Maintenance	Inspect for sediment and debris in catchpit manholes and gullies. Clean out as required	Twice Annually
	Cleaning of gutters and any filters on downpipes	Annually (or as required based on inspections)
	Trimming any roots that may be causing blockages	Annually (or as required)
Occasional Maintenance	Remove sediment and debris in catchpits, gullies, attenuation devices and inside concrete manhole rings.	As required, based on inspections.
Remedial actions	Reconstruct and/or replace components, if performance deteriorates or failure/blockage occurs.	As required
	Replacement of clogged components (flow restriction)	As required
Monitoring	Inspect silt traps/gullies/catchpits and note rate of sediment accumulation.	Monthly in the first year and then annually
	Check attenuation devices	Annually

General maintenance for Surface Water Drainage Systems as per CIRIA C753.

3.3. The required maintenance for each component making up the drainage system is scheduled in the tables below, based on CIRIA report C753 – The SuDS manual.

Permeable Paving

Maintenance Schedule	Required Action	Typical Frequency
Regular Maintenance	Regular raking to ensure even spread and smooth surface, may require additional top up.	Once a year, after autumn leaf fall, or reduced frequency as required, based on site-specific observations of clogging or manufacturer's recommendations – pay particular attention to areas where water runs onto pervious surface from adjacent impermeable areas as this area is most likely to collect the most sediment.
Occasional Maintenance	Stabilise and mow contributing and adjacent areas	As required
	Removal of weeds or management using glyphospate applied directly into the weeds by an applicator rather than spraying.	As required – once per year on less frequently used pavements
Remedial Maintenance	Remediate any landscaping which, through vegetation maintenance or soil slip, has been raised to within 50mm of the level of the paving.	As required
	Remediate work to any depressions, rutting and cracked or broken blocks considered detrimental to the structural performance or a hazard to users, and replace lost jointing material.	As required
	Rehabilitation of surface and upper substructure by remedial sweeping	Every 10 to 15 years or as required (if infiltration performance is
Monitoring	Initial inspection	Monthly for three months after installation
	Inspect for evidence of poor operation and/or weed growth – if required, take remedial action.	Three-monthly, 48 hr after large storms in the first six months
	Inspect silt accumulation rates and establish appropriate brushing frequencies	Annually
	Monitor inspection chambers	Annually

Orifice Plate (Flow Control)

Maintenance Schedule	Required Action	Typical frequency
Regular Maintenance	Remove sediment and debris from flow control chambers and upstream manholes. Check for signs of damage, wear and tear. Check any visible fixing bolts.	Monthly (for the first 12 months, then 6 monthly).
Remedial Actions	Clean or replace orifice plate if defects are located or, if performance deteriorates or failure occurs. In the event of the blockage, the blockage/foreign material should be manually removed	As necessary.
Monitoring	Check flow control to ensure emptying is occurring.	Quarterly and post high intensity storm event.

Headwalls (inlets and outlets)

Maintenance Schedule	Required Action	Typical frequency
Regular Maintenance	Inspect inlets, outlets for blockages and clear if required	Monthly (for the first 12 months, then 6 monthly).
	Check for signs of damage, erosion of banks or scour.	
	Inspect structural integrity of head wall structure	
	Check integrity of metal work and replace when needed.	
Occasional Maintenance	In the event of the blockage, the blockage/foreign material should be manually removed	Annual/bi-annual visual checks are basic recommendation
	Galvanised Grates and Handrails	
Remedial Actions	In the event of damage, erosion of banks or scour, rehabilitate as required.	As required
	Repair/rehabilitation of inlets/outlets/overflows	As required
	Re-level uneven surfaces and reinstate design levels	As required

4. Pollution Prevention & Water Quality Management

SuDS Mitigation Indices

4.1. Chapter 26 of the CIRIA C753 The SuDS Manual, provides design advice to meet water quality standards by adopting the SuDS train treatment mechanism and thereby reduce the risk of pollution by evaluating potential pollution hazards at the outset.

4.2. The proposed site layout provides the opportunity to introduce SuDS into the scheme to reduce potential contaminant risk further.

4.3. Runoff from individual property driveways, residential car parks and low traffic roads are generally viewed as low risk (as per Table 26.2 of C753), shown in the tables below.

Land Use	Pollution Hazard Level	Total Suspended Solids (TSS)	Metals	Hydrocarbons
Individual property driveways, residential car parks and low traffic roads	Low	0.5	0.4	0.4

Pollutant Hazard Indices

	Mitigation Indices				Indices for Calculation		
	TSS	Metals	Hydrocarbons		TSS	Metals	Hydrocarbons
Permeable Paving	0.7	0.6	0.7	100%	0.7	0.6	0.7
Total Mitigation Indices score					0.7	0.6	0.7
Sufficiency of Pollution Mitigation Indices					Sufficient (No additional mitigation required)		

SuDS Mitigation Indices

4.4. The mitigation indices offered by the proposed SuDS features exceed the hazard indices from roof areas and therefore provides adequate mitigation. It is therefore considered that the proposed SuDS features on site are appropriate and acceptable in terms of water quality.

5. Foul Drainage Strategy

5.1. There are no public foul sewers within the vicinity of the site.

5.2. Discharge to ground, i.e. drainage field, has been discounted due to the above information deeming infiltration techniques unfeasible for the site.

5.3. Based on the above information it is therefore proposed that foul flows from the proposed development are to be directed to a package treatment plant, prior to the treated flows discharging into the existing ditch located along the southern boundary of the site. Subject to relevant approvals.

5.4. It is proposed that the stable washdown area is to discharge to an onsite cesspool, capacity of the cesspool tank will be dependent on frequency of use and is subject to detailed design.

Appendix A - Topographical Survey

NOTES
Survey accurate at time of site attendance. Do not scale from printed drawings except for planning purposes.

Grid is based on ordnance survey national grid fixed by GPS satellite active network.
Levels are related to the ordnance survey GPS active Network and transformed using the OSGM15 & OSTN15 model.

Drainage pipe sizes (where shown) have been gauged from the surface for safety reasons and should be regarded as approximate only.

Tree species (where shown) should be treated with caution and expert identification is advised.

Although this is a digital survey the accuracy and amount of detail shown is only commensurate with the graphicall scale of mapping as specified. Care should be exercised when working to larger scales.

Visible features in the vicinity of the boundaries as shown above, may not represent the extent of legally conveyed ownership.

Whilst every effort has been made to achieve accuracy on this plan, CRUCIAL clearance dimensions, levels and invert levels should be checked prior to design and construction.

Areas of dense undergrowth cannot be surveyed in detail, these areas will be shown in outline only and marked as 'dense undergrowth' on the plan.

Kerb levels have been taken on the top of the channel.

ORDNANCE OVERLAY
Ordnance Survey, (c) Crown Copyright 2025. All rights reserved. Licence number 100022432

Ordnance Survey Overlay
National Grid 1:2500 (Accuracy data) Surveying tolerances:
Distances up to 200 metres ±1 in100m
Distances 200 to1,000 metres ±2m
Distances over 1,000 metres ±1 in 500m



medlams
surveys limited
www.medlams-surveys.co.uk
info@medlams-surveys.co.uk
07717 205 388

project:	Parsonsfield Stables, Pickhurst lane, Pulborough		
client:	Manorwood	job ref:	S3078
title:	Measured topo survey	scale	1:200@A1
date	March 2025	dwg no:	EX01 rev:

Appendix B - Proposed Site Layout

The following ecological enhancements will be implemented:

Instillation of a bat box to the mobile home or within a tree positioned approx. 3-5m above ground.

Installation of a bird box to the mobile home or within a tree within the site.

Infilling of any gaps within the existing hedgerows with a native species hedge.

Gaps to be included at the bottom of fences to allow for movement of small mammals across the site.

1no Electric Vehicle (EV) charging point will be provided

1no. Covered and secure cycle parking space will be provided

1no. Refuse and recycling storage facility will be provided



Electric vehicle charging point



Bat box



Bird box



Block Plan Site Area: 2484m²

1:500 | PROPOSED

This drawing is the copyright of Manorwood Construction Ltd but may be used for planning purposes by the Local Authority without breach of copyright.

Do not scale from this drawing unless for Local Authority planning purposes.

All dimensions must be checked on site prior to commencement of works.

Construction (Design and Management) Regulations 2015

This drawing is intended for Planning purposes only and as such does not highlight residual design related health and safety risks.

This information can be provided on request; however, it is anticipated that the full extent of residual risks will be identified during the detailed Building Regulations or construction design Status and prior to construction works commencing on site.

All responsibilities and duties of Principle Designer as stated within the above regulations now revert to the client unless Manorwood are appointed to undertake Building Regulations or construction drawings.

MANORWOOD
building on tradition

Suite 114
26 The Hornet
Chichester
West Sussex
PO19 7BB

tel: 01243 201 102
email: enquiries@manorwood.co.uk
web: www.manorwood.co.uk

Address

Parsons Field Stables, Pickhurst Lane, Pulborough, RH20 1DA

Drawing No.	2311PA_R0.1_002.1
Scale @ A3	1:500
Job No.	2311PA_R0.1
Drawn By	MD
Checked By	BK
Drawn On	30.10.2024
Issued On	30.10.2024
Status	Proposed
Drawing	Block Plan
Submission	Planning
Revision	001

.

N

Indicative: 0.0°

1m @ 1:
50
100
200
500
1250

Appendix C - Proposed Drainage Layout

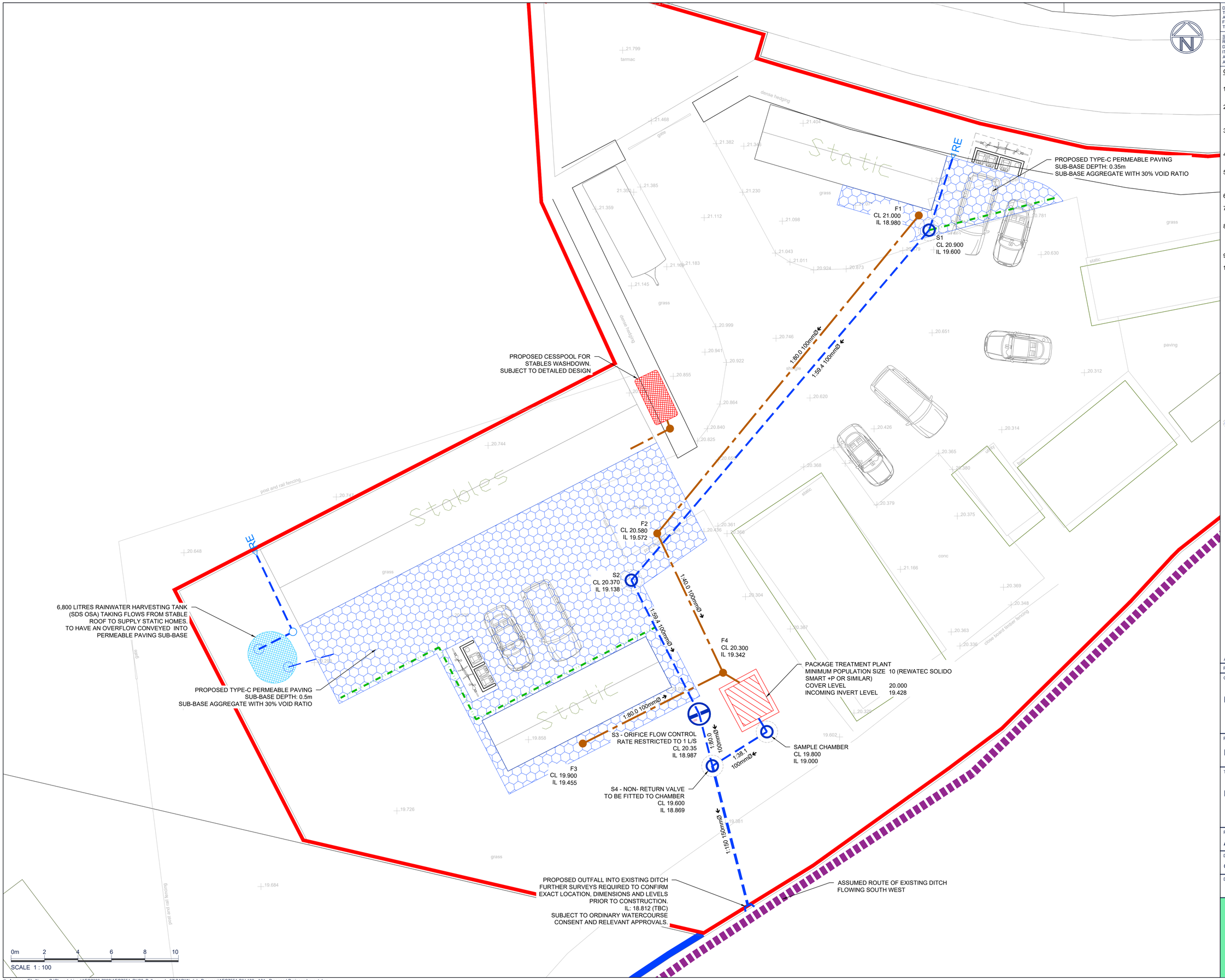

DO NOT SCALE THIS DRAWING, USE FIGURED DIMENSIONS ONLY.
THE CONTRACTOR MUST CHECK & VERIFY ALL DIMENSIONS ON SITE.
ANY DISCREPANCIES MUST BE REPORTED IMMEDIATELY TO THE ENGINEER FOR CLARIFICATION BEFORE PROCEEDING.
THIS DRAWING IS COPYRIGHT AND OWNED BY AEGAEA.

SAFETY, HEALTH AND ENVIRONMENTAL INFORMATION
REFER TO THE RELEVANT CONSTRUCTION (DESIGN AND MANAGEMENT) DOCUMENTATION WHERE APPLICABLE.
IT IS ASSUMED THAT ALL WORKS ON THIS DRAWING WILL BE CARRIED OUT BY A COMPETENT CONTRACTOR, WORKING WHERE APPROPRIATE TO AN APPROVED METHOD STATEMENT.

GENERAL NOTES

1. THIS DRAWING IS INDICATIVE ONLY AND SUBJECT TO CHANGE DURING DETAILED DESIGN AND APPROVALS FROM RELEVANT STATUTORY BODIES.
2. POSITIONS OF EXISTING SERVICES/STATUTORY UNDERTAKERS APPARATUS ADJACENT TO OR CROSSING PROPOSED EXCAVATIONS ARE TO BE CONFIRMED PRIOR TO START ON SITE.
3. THIS DRAWING IS TO BE READ IN CONJUNCTION WITH AND CHECKED AGAINST ALL ENGINEERING DETAILS, SPECIFICATIONS, GEOTECHNICAL AND OTHER RELEVANT DOCUMENTATION PROVIDED.
4. THIS DRAWING IS SCHEMATIC FOR CLARITY ONLY. POSITIONS OF PIPE RUNS AND MANHOLES MAY VARY ON SITE DUE TO SITE CONDITIONS.
5. WHERE EXISTING OR PROPOSED TREES ARE ADJACENT TO ACCESS ROADS OR DRAINAGE, ROOT BARRIERS (TYPE TO BE APPROVED) ARE REQUIRED TO PREVENT STRUCTURAL DAMAGE.
6. ANY ANOMALY OR CONTRADICTIONS BETWEEN ANY OF THE ABOVE IS TO BE REPORTED IMMEDIATELY.
7. THE DESIGN IS TO COMPLY IN ALL ASPECTS WITH THE CURRENT BRITISH STANDARDS, BUILDING REGULATIONS AND BUILDING LEGISLATION ETC.
8. ALL PIPE SIZES, CHAMBER DEPTHS, SIZE & QUANTITY SUBJECT TO REVIEW AND DETAILED DESIGN. ALL ADOPTED PIPE WORK ROUTING AND ANY EASEMENTS SUBJECT TO FULL DESIGN REVIEW AND APPROVAL BY THE RELEVANT BODIES.
9. DRAINAGE DESIGN SUBJECT TO DETAILED LEVELS AND EXTERNAL WORKS DESIGN.
10. SUBJECT TO DETAILED DESIGN AND APPROVAL.

THIS DRAWING IS FOR PLANNING PURPOSES ONLY AND NOT FOR CONSTRUCTION
SUBJECT TO WATER AUTHORITY TECHNICAL APPROVAL

LEGEND

- SITE BOUNDARY
- LAND OWNERSHIP BOUNDARY
- PROPOSED SURFACE WATER DRAINAGE
- PROPOSED FOUL DRAINAGE
- RE▷ PROPOSED RODDING EYE
- PROPOSED SURFACE WATER ORIFICE PLATE
- PROPOSED PERMEABLE PAVING (GRAVEL SURFACING)
- PROPOSED PERMEABLE PAVING OUTLET PERFORATE PIPE
- PROPOSED RAINWATER HARVESTING TANK
- EXISTING DITCH

Rev	Date	Description	By
A01	28.03.25	FIRST ISSUE	CM

Client
MANORWOOD CONSTURCTION LIMITED

Project
PARSONS FIELD STABLES

Title
PROPOSED DRAINAGE LAYOUT

Project No.	Drawing No.	Revision
AEG7554	CIV-100	A01

Drawn	Checked	Approved	Date	Scale @ A1
CM	DB	JM	MAR 2025	1:100

Drawing Status
PLANNING

aegaea
water, civils and environment

FIGURE B18
TYPICAL INSPECTION CHAMBER DETAIL - TYPE D (FLEXIBLE MATERIAL DETAIL)

MAXIMUM DEPTH FROM COVER LEVEL TO SOFFIT OF PIPE
IN AREAS SUBJECT TO VEHICLE LOADING 2M, NON-ENTRY

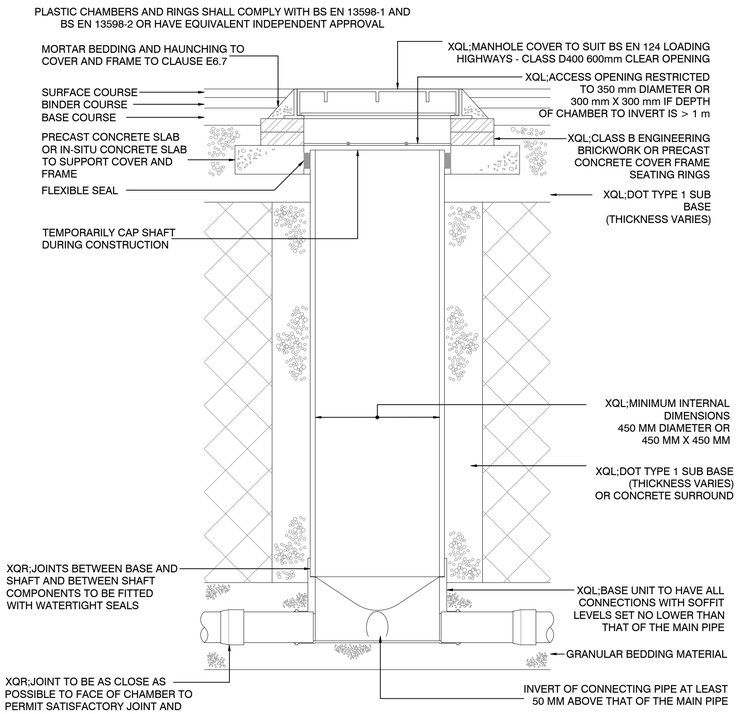

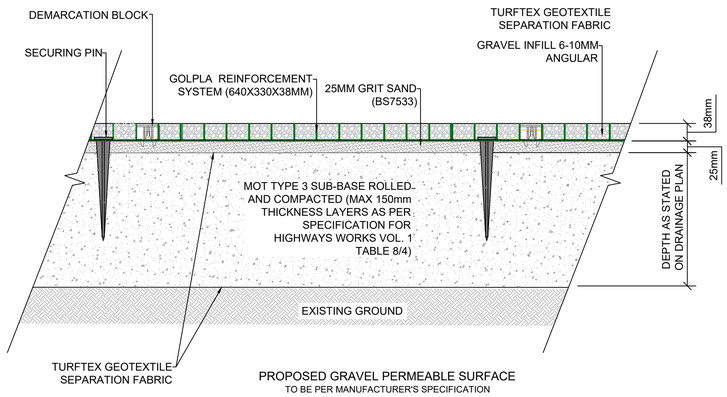

PROPOSED GRAVEL PERMEABLE SURFACE
TO BE PER MANUFACTURER'S SPECIFICATION

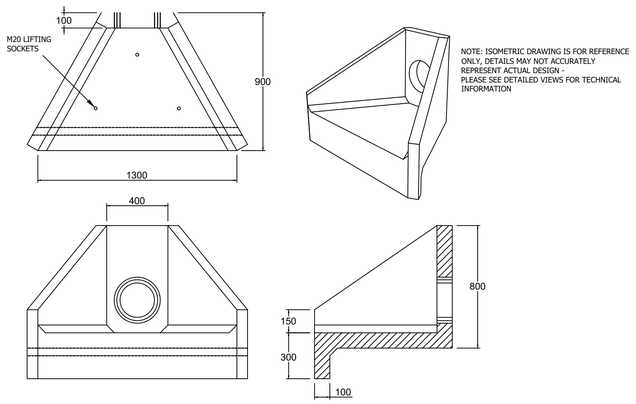

OUTFALL HEADWALL DETAIL
ALTHON H3C HEADWALL

FIGURE B19
ALTERNATIVE TOP DETAILS FOR LIGHT VEHICLE LOADING AND LANDSCAPED AREAS - TYPE D

PLASTIC CHAMBERS AND RINGS SHALL COMPLY WITH BS EN 13598-1 AND BS EN 13598-2 OR HAVE EQUIVALENT INDEPENDENT APPROVAL

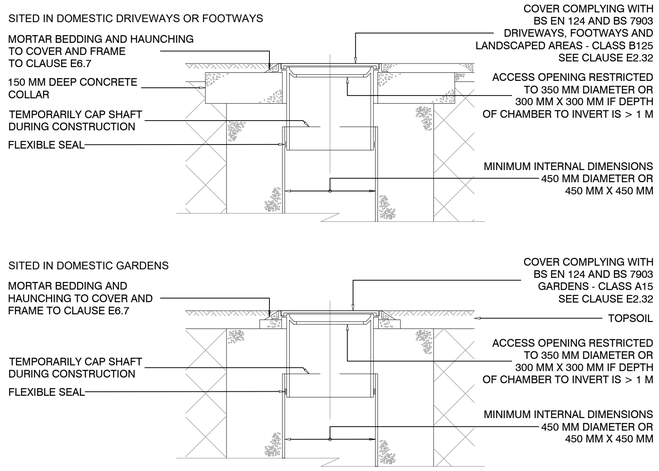

NOTE: WHERE THE ACCESS CHAMBER IS IN THE HIGHWAY THE HIGHWAY AUTHORITY CAN HAVE SPECIFIC REQUIREMENTS

NOT TO SCALE

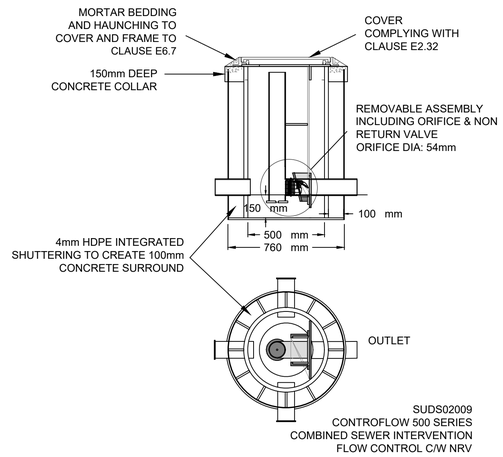

ORIFICE FLOW CONTROL CHAMBER
DETAIL TO BE CONFIRMED WITH MANUFACTURER FOR SITE SPECIFIC REQUIREMENTS

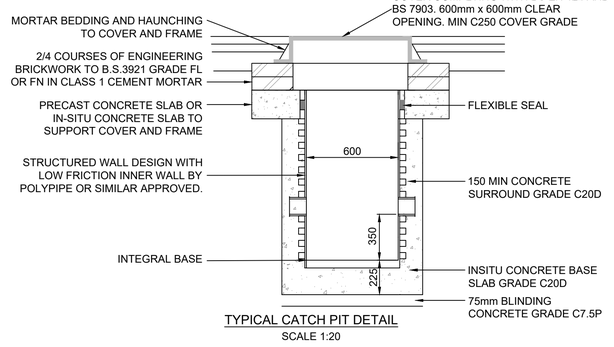

TYPICAL CATCH PIT DETAIL
SCALE 1:20

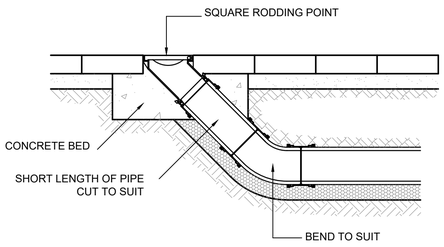

RODDING EYE DETAIL
NTS

FOR SURFACE FINISH TO DRAINAGE EXCAVATION REFER TO THE EXTERNAL FINISHES PLAN AND THEN RELEVANT HIGHWAY DETAILS. NOTE THAT REINSTATEMENT FOR WORKS IN EXISTING ADOPTED HIGHWAYS ARE TO BE AGREED BY THE CONTRACTOR WITH THE RELEVANT HIGHWAY AUTHORITY.

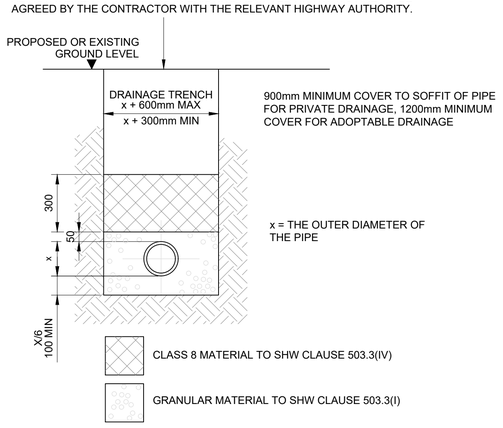

NOTE: CLASS `S` BEDDING FOR USE WITH ALL ADOPTABLE DRAINAGE WITH COVER TO SOFFIT OF PIPE GREATER THAN 1200MM. PRIVATE DRAINAGE WITHIN LANDSCAPED AND OTHER NON-TRAFFICKED AREAS WITH COVER GREATER THAN 1000MM TO THE PIPE SOFFIT MAY USE PIPE BEDDING CLASS `T` REFER TO DRAWING F1 (SHW) HIGHWAY CONSTRUCTION DETAILS.

CLASS 'S' PIPE BEDDING

FOR SURFACE FINISH TO DRAINAGE EXCAVATION REFER TO THE EXTERNAL FINISHES PLAN AND THEN RELEVANT HIGHWAY DETAILS. NOTE THAT REINSTATEMENT FOR WORKS IN EXISTING ADOPTED HIGHWAYS ARE TO BE AGREED BY THE CONTRACTOR WITH THE RELEVANT HIGHWAY AUTHORITY.

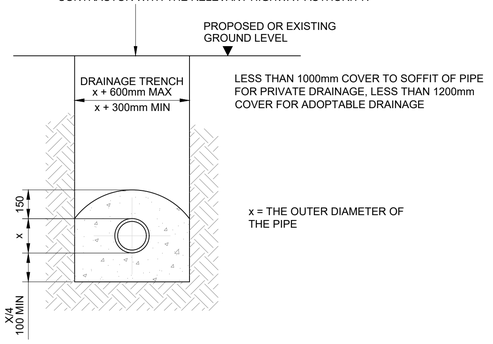

NOTE: CLASS `Z` BEDDING FOR USE WITH ALL ADOPTABLE DRAINAGE WITH COVER TO SOFFIT OF PIPE LESS THAN 1200mm.

CLASS 'Z' PIPE BEDDING

DO NOT SCALE THIS DRAWING, USE FIGURED DIMENSIONS ONLY.
THE CONTRACTOR MUST CHECK & VERIFY ALL DIMENSIONS ON SITE.
ANY DISCREPANCIES MUST BE REPORTED IMMEDIATELY TO THE ENGINEER FOR CLARIFICATION BEFORE PROCEEDING.
THIS DRAWING IS COPYRIGHT AND OWNED BY AEGAEA.

SAFETY, HEALTH AND ENVIRONMENTAL INFORMATION
REFER TO THE RELEVANT CONSTRUCTION (DESIGN AND MANAGEMENT) DOCUMENTATION WHERE APPLICABLE.
IT IS ASSUMED THAT ALL WORKS ON THIS DRAWING WILL BE CARRIED OUT BY A COMPETENT CONTRACTOR, WORKING WHERE APPROPRIATE TO AN APPROVED METHOD STATEMENT.

GENERAL NOTES

1. THE CONTRACTOR IS TO CHECK AND VERIFY ALL SITE DIMENSIONS AND LEVELS, INCLUDING EXISTING SEWER INVERT LEVELS AND UTILITIES, PRIOR TO START ON SITE.
2. POSITIONS OF EXISTING SERVICES ADJACENT TO OR CROSSING PROPOSED EXCAVATIONS ARE TO BE CONFIRMED PRIOR TO START ON SITE.
3. THIS DRAWING IS TO BE READ IN CONJUNCTION WITH AND CHECKED AGAINST ALL, ENGINEERING DETAILS, SPECIFICATIONS, GEOTECHNICAL AND OTHER RELEVANT DOCUMENTATION PROVIDED.
4. POSITIONS OF PIPE RUNS AND MANHOLES MAY VARY ON SITE DUE TO ONGOING STATUTORY UNDERTAKER COMMENTS/SITE CONDITIONS.
5. ANY ANOMALY OR CONTRADICTIONS BETWEEN ANY OF THE ABOVE IS TO BE REPORTED IMMEDIATELY.
6. THE CONTRACTOR IS TO COMPLY IN ALL ASPECTS WITH THE CURRENT BRITISH STANDARDS, BUILDING REGULATIONS AND BUILDING LEGISLATION ETC.
7. WE RECOMMEND INFILTRATION TESTING IS UNDERTAKEN TO THE BASE OF THE INFILTRATION BASIN ONCE CONSTRUCTED TO CONFIRM THE RATE.

THIS DRAWING IS FOR PLANNING PURPOSES ONLY AND NOT FOR CONSTRUCTION
SUBJECT TO WATER AUTHORITY TECHNICAL APPROVAL

Rev	Date	Description	By
A01	28.03.25	FIRST ISSUE	CM

Client
MANORWOOD CONSTURCTION LIMITED

Project
PARSONS FIELD STABLES

Title
PROPOSED DRAINAGE DETAILS

Project No.	Drawing No.			Revision
AEG7554	CIV-110			A01
Drawn	Checked	Approved	Date	Scale @ A1
CM	DB	JM	MAR 2025	1:100

Drawing Status
PLANNING

aegaea
water, civils and environment

© Aegaea - File Name: G:\Shared drives\AEG7000-7999\AEG7554_RH20_Pulborough_07\CAD\Work In Progress\AEG7554-CIV-110 - A01 - Proposed Drainage Details.dwg

Appendix D - Drainage Calculations

Design Settings

Rainfall Methodology	FSR	Maximum Time of Concentration (mins)	30.00
Return Period (years)	5	Maximum Rainfall (mm/hr)	50.0
Additional Flow (%)	0	Minimum Velocity (m/s)	1.00
FSR Region	England and Wales	Connection Type	Level Soffits
M5-60 (mm)	20.000	Minimum Backdrop Height (m)	0.200
Ratio-R	0.400	Preferred Cover Depth (m)	1.200
CV	1.000	Include Intermediate Ground	✓
Time of Entry (mins)	5.00	Enforce best practice design rules	✓

Nodes

Name	Area (ha)	T of E (mins)	Cover Level (m)	Diameter (mm)	Easting (m)	Northing (m)	Depth (m)
S1	0.007	5.00	20.900	350	505501.236	120899.239	1.300
S2			20.370	350	505483.445	120878.324	1.232
S3	0.038	5.00	20.350	1200	505487.498	120870.328	1.363
S4			19.600	600	505488.287	120867.228	0.781
OUTFALL			19.500		505490.412	120858.876	0.767

Links

Name	US Node	DS Node	Length (m)	ks (mm) / n	US IL (m)	DS IL (m)	Fall (m)	Slope (1:X)	Dia (mm)	T of C (mins)	Rain (mm/hr)
1.000	S1	S2	27.458	0.600	19.600	19.138	0.462	59.4	100	5.46	50.0
1.001	S2	S3	8.965	0.600	19.138	18.987	0.151	59.4	100	5.61	50.0
1.002	S3	S4	3.199	0.600	18.987	18.869	0.118	27.1	100	5.64	50.0
1.003	S4	OUTFALL	8.618	0.600	18.819	18.733	0.086	100.2	150	5.79	50.0

Name	Vel (m/s)	Cap (l/s)	Flow (l/s)	US Depth (m)	DS Depth (m)	Σ Area (ha)	Σ Add Inflow (l/s)	Pro Depth (mm)	Pro Velocity (m/s)
1.000	1.001	7.9	1.3	1.200	1.132	0.007	0.0	27	0.730
1.001	1.001	7.9	1.3	1.132	1.263	0.007	0.0	27	0.731
1.002	1.488	11.7	8.1	1.263	0.631	0.045	0.0	61	1.606
1.003	1.004	17.7	8.1	0.631	0.617	0.045	0.0	71	0.981

Pipeline Schedule

Link	Length (m)	Slope (1:X)	Dia (mm)	Link Type	US CL (m)	US IL (m)	US Depth (m)	DS CL (m)	DS IL (m)	DS Depth (m)
1.000	27.458	59.4	100	Circular	20.900	19.600	1.200	20.370	19.138	1.132
1.001	8.965	59.4	100	Circular	20.370	19.138	1.132	20.350	18.987	1.263
1.002	3.199	27.1	100	Circular	20.350	18.987	1.263	19.600	18.869	0.631
1.003	8.618	100.2	150	Circular	19.600	18.819	0.631	19.500	18.733	0.617

Link	US Node	Dia (mm)	Node Type	MH Type	DS Node	Dia (mm)	Node Type	MH Type
1.000	S1	350	Manhole	Adoptable	S2	350	Manhole	Adoptable
1.001	S2	350	Manhole	Adoptable	S3	1200	Manhole	Adoptable
1.002	S3	1200	Manhole	Adoptable	S4	600	Manhole	Adoptable
1.003	S4	600	Manhole	Adoptable	OUTFALL		Junction	

Flow+ v14.0 Copyright © 1988-2025 Causeway Technologies Ltd

Simulation Settings

Rainfall Methodology	FSR	Analysis Speed	Normal
Rainfall Events	Singular	Skip Steady State	x
FSR Region	England and Wales	Drain Down Time (mins)	240
M5-60 (mm)	20.000	Additional Storage (m³/ha)	0.0
Ratio-R	0.400	Starting Level (m)	
Summer CV	1.000	Check Discharge Rate(s)	x
Winter CV	1.000	Check Discharge Volume	x

Storm Durations

15	30	60	120	180	240	360	480	600	720	960	1440

Return Period (years)	Climate Change (CC %)	Additional Area (A %)	Additional Flow (Q %)
1	0	0	0
30	0	0	0
100	45	0	0

Node S3 Online Orifice Control

Flap Valve	x	Design Depth (m)	1.100	Discharge Coefficient	0.600
Replaces Downstream Link	x	Design Flow (l/s)	1.0		
Invert Level (m)	18.987	Diameter (m)	0.021		

Node S1 Carpark Storage Structure

Base Inf Coefficient (m/hr)	0.00000	Invert Level (m)	20.450	Slope (1:X)	150.0
Side Inf Coefficient (m/hr)	0.00000	Time to half empty (mins)		Depth (m)	0.350
Safety Factor	2.0	Width (m)	3.000	Inf Depth (m)	
Porosity	0.30	Length (m)	9.400		

Node S3 Carpark Storage Structure

Base Inf Coefficient (m/hr)	0.00000	Invert Level (m)	19.650	Slope (1:X)	150.0
Side Inf Coefficient (m/hr)	0.00000	Time to half empty (mins)		Depth (m)	0.600
Safety Factor	2.0	Width (m)	8.800	Inf Depth (m)	
Porosity	0.30	Length (m)	24.000		

Flow+ v14.0 Copyright © 1988-2025 Causeway Technologies Ltd

Results for 1 year Critical Storm Duration. Lowest mass balance: 93.95%

Node Event	US Node	Peak (mins)	Level (m)	Depth (m)	Inflow (l/s)	Node Vol (m³)	Flood (m³)	Status
120 minute summer	S1	86	19.740	0.140	0.7	0.0134	0.0000	SURCHARGED
120 minute summer	S2	84	19.740	0.602	1.3	0.0578	0.0000	SURCHARGED
120 minute summer	S3	84	19.740	0.753	3.1	2.4556	0.0000	SURCHARGED
120 minute summer	S4	84	18.841	0.022	0.8	0.0062	0.0000	OK
120 minute summer	OUTFALL	84	18.755	0.022	0.8	0.0000	0.0000	OK

Link Event (Upstream Depth)	US Node	Link	DS Node	Outflow (l/s)	Velocity (m/s)	Flow/Cap	Link Vol (m³)	Discharge Vol (m³)
120 minute summer	S1	1.000	S2	0.4	0.447	0.051	0.2148	
120 minute summer	S2	1.001	S3	-1.2	-0.155	-0.154	0.0701	
120 minute summer	S3	1.002	S4	0.8	0.821	0.068	0.0031	
120 minute summer	S4	1.003	OUTFALL	0.8	0.505	0.044	0.0135	7.3

Flow+ v14.0 Copyright © 1988-2025 Causeway Technologies Ltd

Results for 30 year Critical Storm Duration. Lowest mass balance: 93.95%

Node Event	US Node	Peak (mins)	Level (m)	Depth (m)	Inflow (l/s)	Node Vol (m³)	Flood (m³)	Status
120 minute winter	S1	112	19.876	0.276	1.2	0.0265	0.0000	SURCHARGED
120 minute winter	S2	116	19.876	0.738	1.2	0.0708	0.0000	SURCHARGED
120 minute winter	S3	114	19.876	0.889	5.6	10.2668	0.0000	SURCHARGED
120 minute winter	S4	116	18.842	0.023	0.9	0.0064	0.0000	OK
120 minute winter	OUTFALL	116	18.755	0.022	0.9	0.0000	0.0000	OK

Link Event (Upstream Depth)	US Node	Link	DS Node	Outflow (l/s)	Velocity (m/s)	Flow/Cap	Link Vol (m³)	Discharge Vol (m³)
120 minute winter	S1	1.000	S2	0.8	0.447	0.105	0.2148	
120 minute winter	S2	1.001	S3	-1.2	-0.151	-0.150	0.0701	
120 minute winter	S3	1.002	S4	0.9	0.841	0.073	0.0033	
120 minute winter	S4	1.003	OUTFALL	0.9	0.518	0.048	0.0143	16.2

Flow+ v14.0 Copyright © 1988-2025 Causeway Technologies Ltd

Results for 100 year +45% CC Critical Storm Duration. Lowest mass balance: 93.95%

Node Event	US Node	Peak (mins)	Level (m)	Depth (m)	Inflow (l/s)	Node Vol (m³)	Flood (m³)	Status
15 minute summer	S1	12	20.102	0.502	5.8	0.0482	0.0000	SURCHARGED
180 minute winter	S2	176	20.098	0.960	1.2	0.0922	0.0000	FLOOD RISK
180 minute winter	S3	176	20.098	1.111	8.0	24.5754	0.0000	FLOOD RISK
180 minute winter	S4	176	18.843	0.024	1.0	0.0068	0.0000	OK
180 minute winter	OUTFALL	176	18.757	0.024	1.0	0.0000	0.0000	OK

Link Event (Upstream Depth)	US Node	Link	DS Node	Outflow (l/s)	Velocity (m/s)	Flow/Cap	Link Vol (m³)	Discharge Vol (m³)
15 minute summer	S1	1.000	S2	4.7	0.710	0.601	0.2148	
180 minute winter	S2	1.001	S3	1.1	0.138	0.137	0.0701	
180 minute winter	S3	1.002	S4	1.0	0.868	0.082	0.0035	
180 minute winter	S4	1.003	OUTFALL	1.0	0.535	0.054	0.0155	21.6

Flow+ v14.0 Copyright © 1988-2025 Causeway Technologies Ltd