Consulting Civil Engineers

Water Neutrality Report

The Smithy, Bolney Road, Cowfold, Horsham RH13 8AA

For

Dynamic Climate

Rev – **P2**

Reference **C3147**

Date **19th November 2024**

Revision	Date of Issue	Comments	Prepared By	Checked By
P-	30.04.2024	Initial Issue	LT	CS
P1	06.11.2024	BREEAM Results updated and included	LT	CS
P2	19.11.2024	Revised reoirt	LH	CS

Richard Cobden House, Lion Street, Chichester, West Sussex, PO19 1LW
Tel: 01243 933253 E: mail@cgscivils.co.uk **W:** www.cgscivils.co.uk

1 Introduction

1.1.1 CGS Civils Ltd has been appointed by Dynamic Climate to undertake a Water Neutrality Report for a proposed development at The Smithy, Bolney Road, Horsham. Planning permission is sought to expand the existing office space, providing a first floor, which would allow enough space for an additional 6 employees. The site falls within the Sussex North Water Supply Zone, in which Natural England have written to all authorities within the zone providing a position statement for applications which may place increased pressure on this zone. This explains that recent case law has established that abstraction from the Supply Zone may be having an impact on protected sites (Arun Valley Special Area of Conservations (SAC), Special Protection Area (SPA) and Ramsar site). As a result, developments within this zone must not add to this impact, as such, the purpose of this report is to therefore provide an overview on the potential water usage changes on the site as a result of the proposed development, and to confirm that the site is water neutral.

Fig 1. Sussex North Water Supply Zone Area

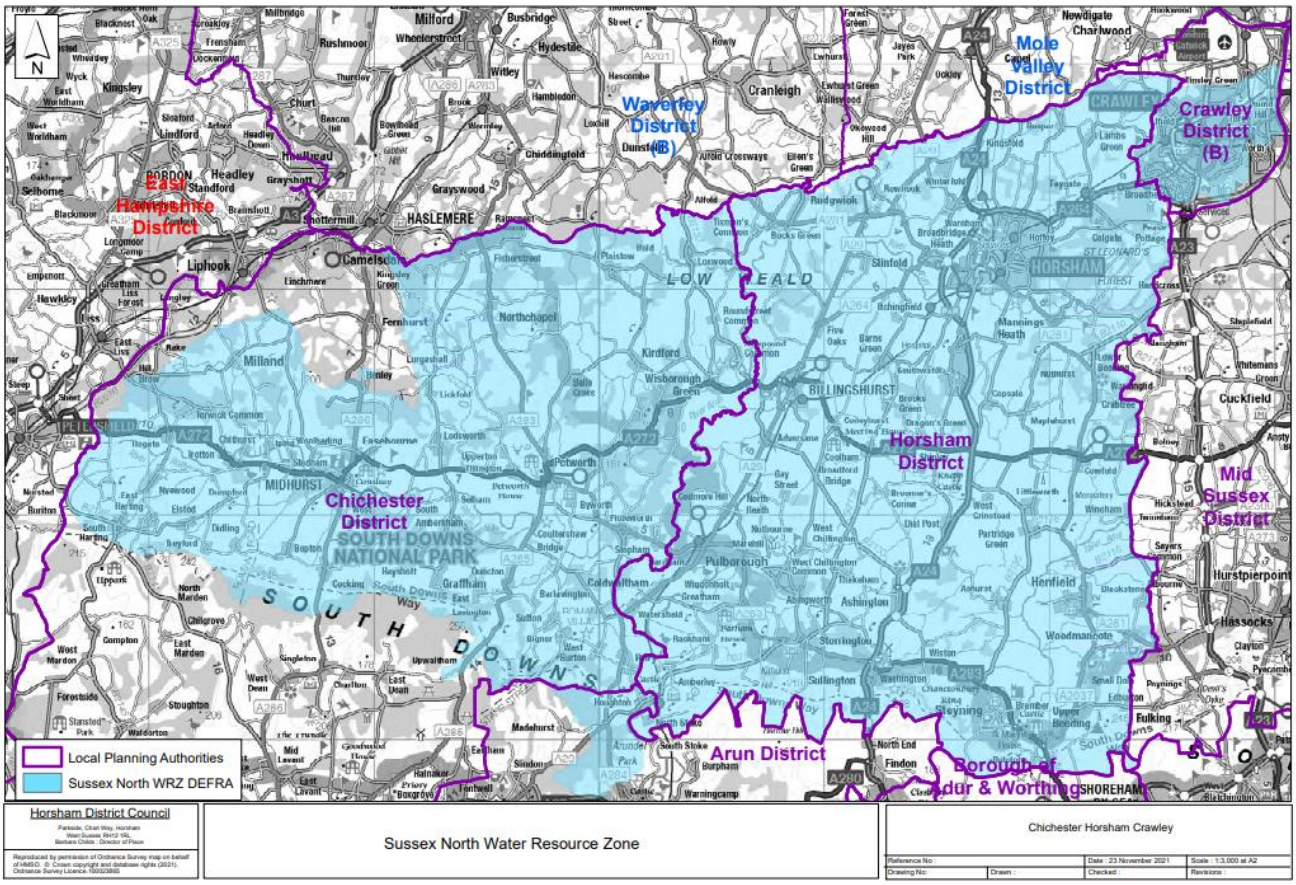

Fig 2. Site Location

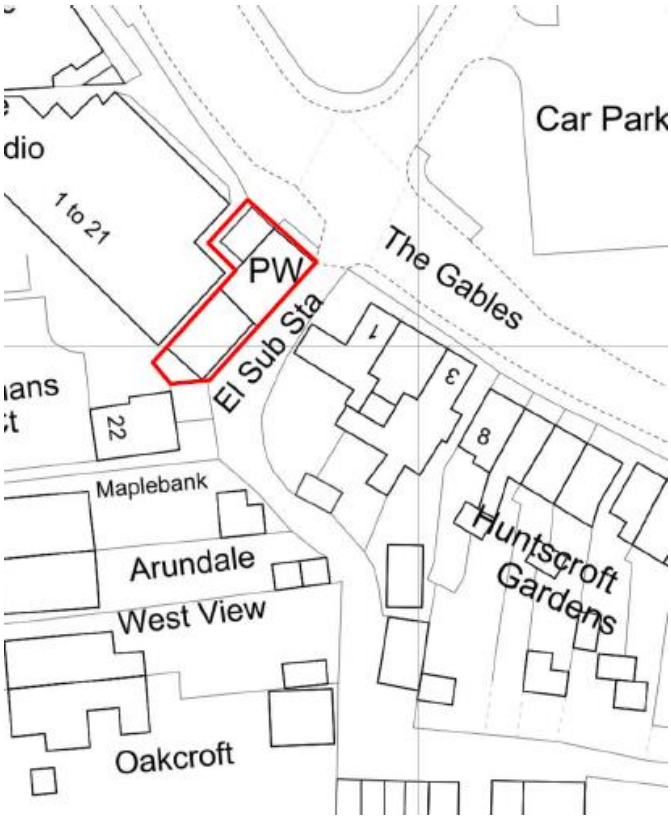

1.1.2 The proposed development is located at OS Grid Reference TQ 21385 22508 and has the post code RH13 8AA.

1.1.3 Waterwise defined Water Neutrality as:

'For every new development, total water use in the region after the development must be equal to or less than the total water uses in the region before the new development.'

1.1.4 Achieving water neutrality involves using a three-step approach. First, the demand for water from the new development must be reduced as far as is practicable, followed by the re-use of water; then the remaining demand should be offset within the region. Following this three-step approach allows the volume that requires offsetting to be reduced which ultimately reduces the cost of the overall scheme. This is noted within the Waterwise neutrality definition, which defines the three steps which should be undertaken in order to achieve water neutrality in their recent review dated January 2021.

- Reduce water demand in the new development through improvement in efficiency.
- Re-use water, wherever possible.
- Offset the remaining water demand from the new development if required.

1.1.5 The report will be split into the following sections:

- A Review of Water Neutrality demand reduction
- A calculation of estimate water usage from proposed development
- Identification of measures that can be first used to reduce this demand
- Identification of measures that can be used to re-use water
- Establish solutions to offset that demand in order to achieve neutrality.

1.1.6 This report will follow the methods documented within *'A Review of Water Neutrality in the UK'* carried out by Waterwise in January 2021. The document provides details on how developments can achieve water neutrality by utilising the 3-stage approach.

Fig 3. 3-stage approach

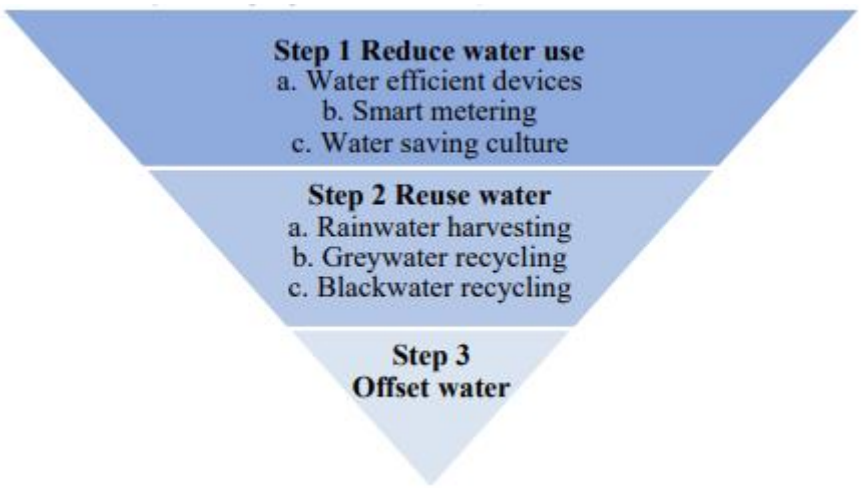

1.1.7 Some increase in water demand within the region from planned development during the local plan period is inevitable. However, it can be minimised by making the site as water efficient as possible.

1.1.8 Per Capita Consumption (PCC) is used as a measure of water use and is the volume of water that is used by one person in one day. It is usually measured in litres per person per day (l/p/d). The average PCC within Southern Water's 'Sussex North Water Resource Zones (WRZ)' is 135 l/p/d. Homes without a water meter consume on average 160 l/p/d and for homes with a water meter, consume on average 131 l/p/d.

1.1.9 Part G of the Building regulations currently states that new build housing should achieve a minimum of 125 l/p/d. A tighter target of 110 l/p/d can be requested if the local authority can establish a clear need based on available evidence.

1.1.10 The table below indicates different demand scenarios including Southern Water's Target 100 Ambition to achieve 100 l/p/d, as well as further scenarios where water demand is cut more dramatically.

Table 1 PCC Demand Scenarios

Demand Scenario	Per Capita Consumption (l/p/d)
British Flows and Loads	150
Building Regulations Standard	125
Building Regulations Optional	110
Target 100	100
Realistic Achievable	85
Ambitious	62

1.1.11 The benefits of water neutrality are wide ranging, from financial and reputational to environment and social. For a new domestic building, they could include:

- **Saving Water** – Over 100,000 litres of water can be saved per year for each water neutral home built
- **Saving Carbon** – A significant CO2 saving can be achieved by reducing the demand for hot water for baths, showers, basins, dishwashers and washing machines
- **Saving Money** – Both water and energy bills will reduce
- **Reducing environmental impact** – Decreasing water abstracted from rivers and groundwater sources
- **Improved Resilience** – For the future by minimising the additional pressure on water resources
- **Enabling future housing growth** – In water scarce areas by reducing the impact of new homes and buildings
- **Reducing discharge to sewage** – by using less water, collecting rainwater and recycling greywater, less water is discharged to the drainage network
- **Short pay-back time** – After approximately 5 years the saving of water neutrality will outweigh the costs of doing so.

2 Executive Summary

2.1.1 The existing site consists of office space, which is currently being used by 10 employees, the water usage for which is **193.10 l/day.** The proposed scheme will consist of expanding the existing office space, providing a first floor, which would allow enough space for an additional 6 employees.

2.1.2 As proven within this report, the implementation of rainwater harvesting techniques to supply the office's toilets with water will enable the proposals to become water neutral. The existing water usage is calculated by utilizing the BREEAM calculator for office blocks and an existing fittings survey (C3147 Existing Fittings Survey) as per the latest HDC Guidance.

2.1.3 The BREEAM calculator has been adjusted from a generic usage calculator to a specific office calculator.

Table 2 Water Usage Comparison

Existing Water usage	**193.10 l/day**
Proposed Scheme water usage prior mitigation	308.96 l/day
Proposed scheme water usage post mitigation	84.96 l/day
Proposed Scheme water usage equal to or lower than existing site	Yes

3 Calculation of the existing site's water demand

3.1.1 As the existing site consists of office space, BREEAM's guidance should be followed when calculating the water demand of the site.

3.1.2 An Existing Fittings Survey has been carried out for this site (refer to C3147 Existing Fittings Survey). As a summary of the report, the existing office is currently fitted with two toilets, two basin taps and a kitchen sink tap, the water demand for which is **14.00 l/p/day, 3.27 l/p/day** and **2.04 l/p/day** respectively (refer to Appendix C). This results in a total water demand of **19.31 l/p/day** or **193.10 l/day** once all of the ten current employees are accounted for.

3.1.3 The BREEAM calculations for the existing offices have been included within Appendix C of this report.

4 Calculation of estimate water usage from the proposed development

4.1.1 The proposals consist of expanding the office space to provide a first floor. Whilst there is no intention to increase the number of employees, there will be sufficient space to allow for up to six new employees. As this is the case, this scenario needs to be catered for.

4.1.2 As outlined above, the water demand for the employee's will be **19.31 l/p/day**, when all sixteen employees are accounted for, this results in a total water demand of **308.96 l/day.** It is proposed that the water demand be reduced through the use of rainwater harvesting, this will be explained in Section 2 of this report.

4.1.3 The BREEAM calculations for the proposed offices have been included within Appendix D of this report.

5 Step 1 – Identifying measures that can be used to reduce this demand

5.1.1 As mentioned above, it is proposed that water neutrality is achieved by installing a rainwater harvesting tank to supply water to the office's toilets. As this is the case, water efficient fittings will not be considered for this site.

6 Step 2 – Identify measures that can be used to re-use water

6.1.1 Water reuse will now be considered to achieve water neutrality. The term 'water reuse' refers to the capture, treatment (if it is required) and the use of alternative water supplies for non-potable purposes. It includes:

- Rainwater and surface water harvesting
- Greywater recycling (typically the used water from baths, showers and hand basins)
- Wastewater recycling.

6.1.2 The installation of water reusing technology has the potential to save significant amounts of water; for example, 24% of water in the home is used for flushing the toilet and only 4% externally in the garden meaning a water reuse system could save at least a quarter of the demand if it was installed for these purposes. Depending on the quality and the system installed, it could also be possible to re-use water for a washing machine which accounts for 12% of total water usage.

Table 8 Practical Summary of Step 2

Step 2: Reuse Water			
Rainwater Harvesting	Small scale water butt	Rainwater Harvesting system for individual homes and buildings	Large scale surface water harvesting
Greywater Recycling		Small systems for individual homes	Largest scale systems for commercial and mixed-use sites

6.1.3 In this instance however, rainwater harvesting is proposed to provide water to the office's toilets. The installation of water reusing technologies will further reduce the water demand on site, depending on the harvesting tank installed. The proposed roof area is sufficient to provide the required water to the property via a rainwater harvesting tank as well as has sufficient capacity for a 35-day drought period. **See Appendix A**.

6.1.4 By installing the water efficient devices listed above as well as the rainwater harvesting technologies listed above, the total demand will be reduced to:

16 x (3.27 l/p/day + 2.04 l/p/day)

= 84.96 l/day

- *16 (maximum number of employees) x (3.27 l/p/day (water demand from basin taps) + 2.04 l/p/day) (Water demand from the kitchen sink taps)*

Table 9 Part G rainwater collection calculator

Rainwater Collection Calculation	
Collection Area (m²)	145
Yield Coefficient	0.8
Depth of rainfall (mm/year)	829
Daily rainwater collection (litres)	263
Number of employees	16
Daily Rainwater per person (litres)	16.44

6.1.5 A calculation is to be made to ensure that the rainwater harvested is greater than the rainwater demand within the office. The following is a calculation for 5% of the annual rainwater yield and has been calculated using Rainfall data from the National River Flow Archive which provides annual rainfall data as recorded by the Met office and follows the intermediate approach as detailed within BS 8515:2009.

6.1.6 Using the rainfall catchment data provided by the National River Flow Archives, the closest station point to the site is 41012 – Adur E Branch at Sakeham:

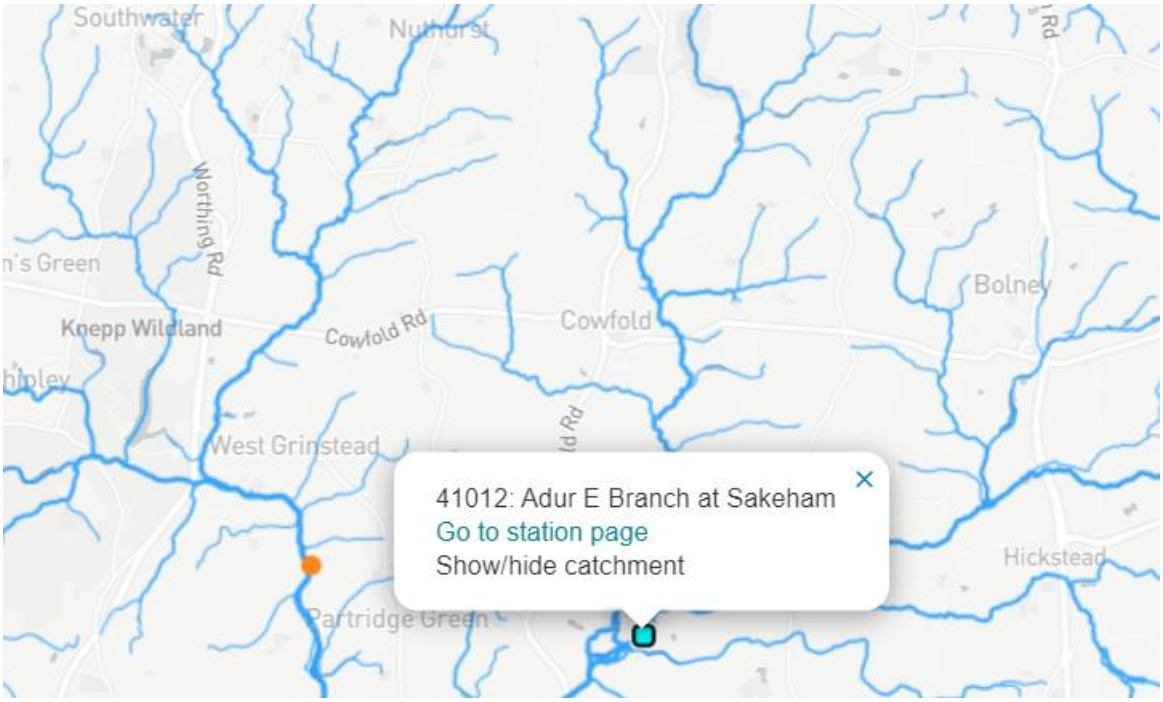

6.1.7 The latest data available for this station is SAAR 1961-1990, which shows that the depth of rainfall in the area is 829mm.

$$Y_R = A \times e \times h \times n \times 0.05$$

Where:

Y_R = the annual rainwater yield (l)
A = The collecting area (m^2)
e = yield coefficient (%)
h = depth of rainfall (mm)
n = hydraulic filter efficiency

$$\mathbf{4{,}568} = 145 \times 0.8 \times 829 \times 0.95 \times 0.05$$

6.1.8 In order to ensure there is sufficient roof area, another calculation from BS 8515:2009 must be carried out in order to calculate the annual demand within the office. The following is a calculation for 5% of the annual non-potable water demand.

$$D_N = P_d \times n \times 365 \times 0.05$$

Where:
D_N = the annual non-potable water demand (l)
P_d = The daily requirement per person (l)
n = number of employees

$$4{,}088 = 14.00 \times 16 \times 365 \times 0.05$$

6.1.9 To ensure there is sufficient area to allow a 35-day drought storage, an extra 35 days is to be included:

$$\mathbf{4{,}480} = 14.00 \times 16 \times 400 \times 0.05$$

Fig. 4 Potential Rainwater Harvesting tank locations

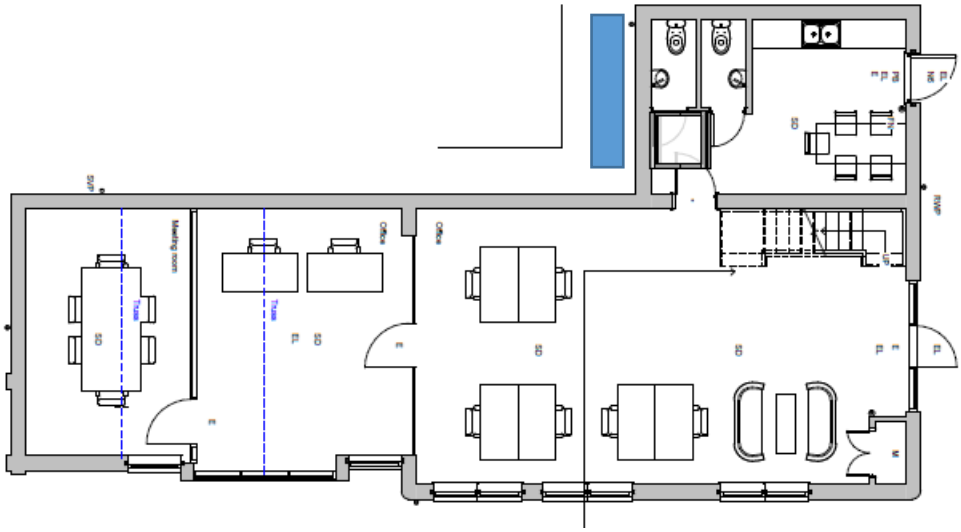

6.1.10 From the above water calculations, we have:

- Proposed water usage rate of 19.31 litres/person/day based on BREEAM guidance.
- Which can then be reduced to a proposed water usage rate of 5.31 litres/person/day with rainwater harvesting.

6.1.11 In order to provide a cumulative consumption comparison between the existing and the proposed water usage, the occupancy rates would be for 'as existing' and 'as proposed':

- Proposed water demand from BREEAM guidance – 19.31 l/p/d for the 16 employees = **308.96 l/day.**
- Proposed Water Demand with Rainwater harvesting – 5.31 l/p/d for the 16 employees = **84.96 l/day.**

6.1.12 The client is willing to install a 7500-litre rainwater harvesting tank in order to supply water to the office's toilets.

7 Step 3 – Offsetting remaining water demand

7.1.1 As outlined above, there is no remaining water demand left to offset.

8 Conclusion

8.1.1 The overall water demand can be reduced by utilising methods listed in the section above to re-use water for the proposed development. This results in the site becoming water neutral.

8.1.2 To summarise:

- The proposed development will use on average **308.96 l/day** prior to any mitigation techniques.
- Re-using the water through rainwater harvesting tanks can reduce the water demand down to **84.96 l/day.**
- The overall water demand will be reduced by **108.14 l/day** over the existing site, resulting in the site becoming water neutral.

9 Appendices

9.1 Appendix A:

Rainwater Harvesting Tank Size Calculator:

COLLECTABLE ROOF AREA (M²)

Main Building	Width:		Length:		Rain Collection Area:	0	m²
Extension one	Width:		Length:		Rain Collection Area:	0	m²
Extension Two	Width:		Length:		Rain Collection Area:	0	m²
Extension Three	Width:		Length:		Rain Collection Area:	0	m²
Or the total roof area, if you already know it:				145	Total area of collectable roof space:	145	m²
Select Your Region		England SE & Central S			Average rainfall per year in your region:	64	L
Collectable rainwater per annum in litres - discounted by 20% to account for water loss						**74240**	**L**

USE OF RAINWATER IN THE BUILDING

	people:	bedrooms:	
Number of people or bedrooms in the building -	16	0	
☐ Number of clothes washing cycles per day (*50 litres each*)	0.00 Cycles	0.00	L
☐ Number of toilet flushes per day (*4.42 flushes per person, average 5 litres each*)	0.00 Flushes	0.00	L
Outdoor use in litres, per person per day (*recommended 5 litres per person per day*)	14	224.00	L
Amount of water you require every day		224	L
Amount of water you require every year	**DEMAND**	**81760**	**L**

FINAL FIGURES

How many days drought protection do you need? Typically 21 (18 minimum)	35	
Capacity of water storage in litres required for drought protection	7840.00	L
The lesser of YIELD (blue) or DEMAND (green) per annum	74240	L
Therefore, volume of rainwater storage required	**7118**	**L**

CONCLUSION

Is there sufficient roof water available:		YES
Recommended tank size from our shallow dig range:	F-Line Range:	7500 LITRE F-LINE TANK

9.2 Appendix B:

Example Rainwater Harvesting Tank Brochure:

Carat Rainwater Harvesting solutions



RAINWATER HARVESTING

WASTEWATER SYSTEMS

RAINWATER RETENTION

DRINKING WATER RESERVOIRS

Edition 2007
Salesfolder C 27-2 Carat EN

Benefits of the Carat System

Flexible, stackable, user-friendly and better for the environment

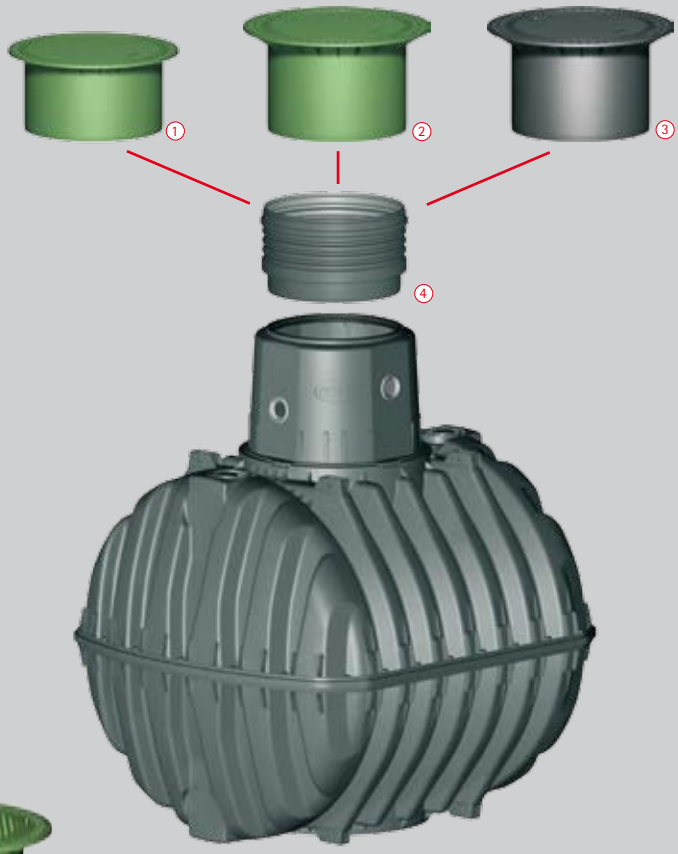

① **Mini telescopic dome shaft with PE lid**
Designed for non-vehicle loading and ideal for garden use, the shaft can be adjusted from 750 - 950 mm and tilted up to 5% to sit flush with the ground level. Includes a PE lid with child safety lock. This item is supplied in green.

② **Maxi telescopic dome shaft with PE lid**
Designed for non-vehicle loading and ideal for the Complete Package (Eco-Plus), the shaft can be adjusted from 750 - 1,050 mm and tilted up to 5% to sit flush with the ground level. Includes PE lid with child safety lock. This item is supplied in green.

③ **Vehicle loading telescopic dome shaft with cast iron lid**
Designed for vehicle loading applications, the tank can be adjusted from 750 -1,050 mm and tilted up to 5% to sit flush with the ground level. Includes child-safe cast iron cover. This item is supplied in dark grey.

④ **Extension**
For use with the telescopic dome shaft to increase the height of the lid from 1,000 - 1,500 mm. Always refer to installation instructions when usig this item.





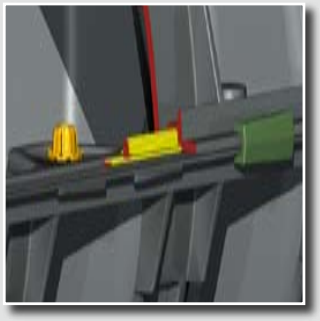

Logistical advantages of the Carat

The Carat tank consists of two half shells which can be stacked on top of each other, allowing multiple tanks to be stacked on a single pallet for shipping. For example, it is possible to stack five 6,500 ltr Carat tanks, or nine 2,700 ltr Carat tanks on a single pallet. This allows a standard 40 ft. shipping container to house a total tank volume of up to 130,000 ltrs! The tanks unique stacking feature directly reduces transport costs and environmental impact from vehicle emissions, whilst allowing shipments to any destination in the world.

Easy and safe assembly

- The patented quick connection (illustrated in green), allows the Carat tank to be assembled without screws in only few minutes. Disassembly is possible at any time.
- The first-class EPDM material used in the profile sealings (illustrated in yellow), has been laboratory tested to last more than 25 years.
- The centering bolt (illustrated in orange) assures the accurate and easy assembly of the two half shells preventing any leaks

The Carat

The first Rainwater underground tank of its kind!

NEW

Unique manufacturing process

The GRAF Carat underground tank is unlike any other underground tank in the world. It is the largest tank of its kind to be manufactured by injection compression moulding. This technique provides the tank with unbeatable stability and ensures that each component is produced with the highest of accuracy.

Unlike other underground tanks, the wall thickness is equal in all areas of the tank. The production tolerances are kept to a minimum, resulting in a product of the highest quality, which is strong, accurate, reliable and extremely user-friendly.

To manufacture the Carat range, one of the worlds largest injection moulding systems had to be developed.

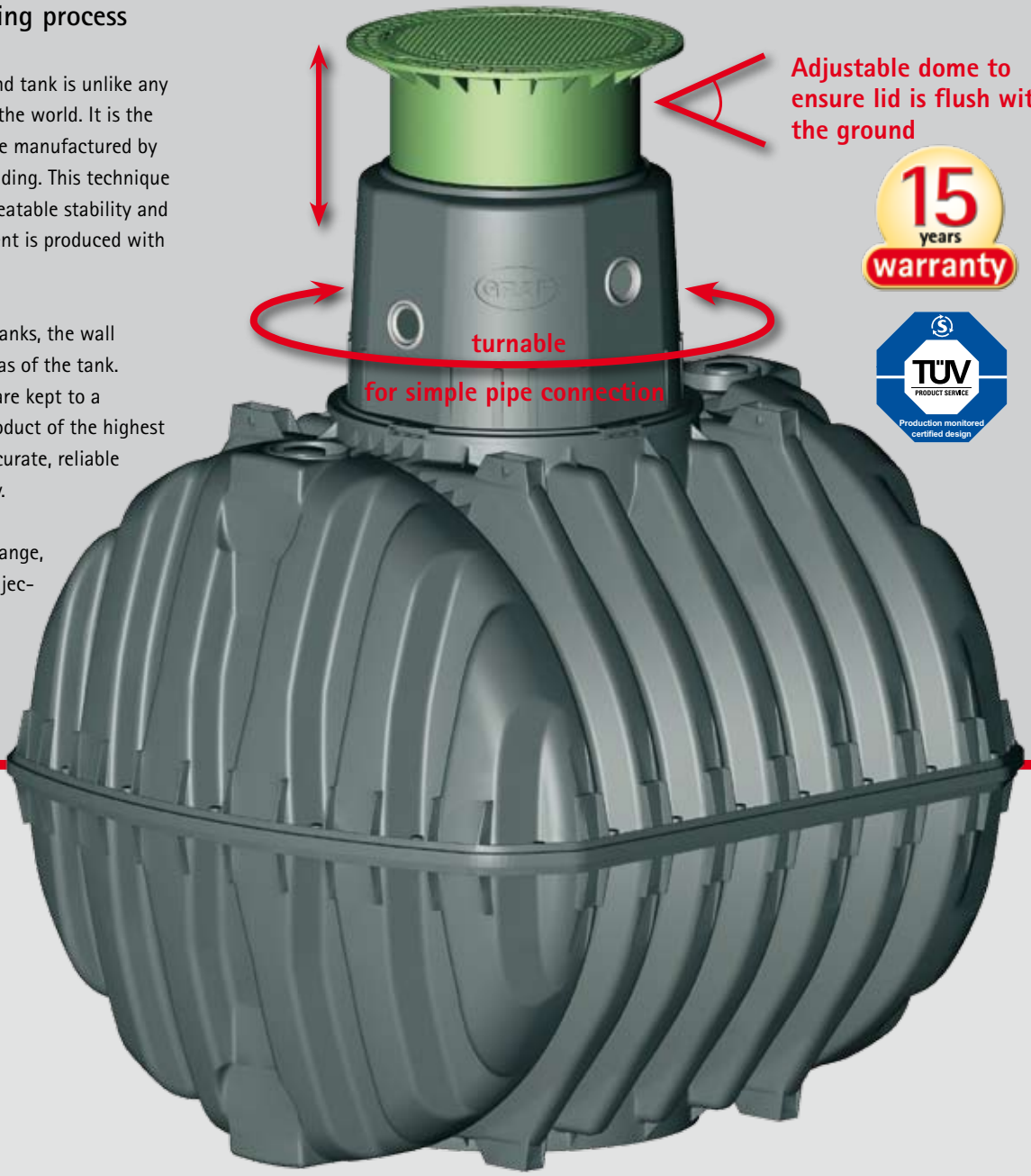

The Carat underground tank is made from Duralen®, a high quality material that is extremely rigid and impact resistant, therefore ideally suited for producing underground tanks. With very low warping characteristics and high stiffness, this material provides high stability and a unique life expectancy. Duralen® can also be easily recycled which reduces waste and environmental impact.

Duralen®

The modular Carat system

Choose your tank size

NEW

Carat, vehicle bearing underground tank

Size 2,700 – 13,000 litres
(700 – 3,400 US-Gallons).
Designed to be used in conjunction with the vehicle loading telescope dome shaft. The access dome is designed in accordance to DIN testing.

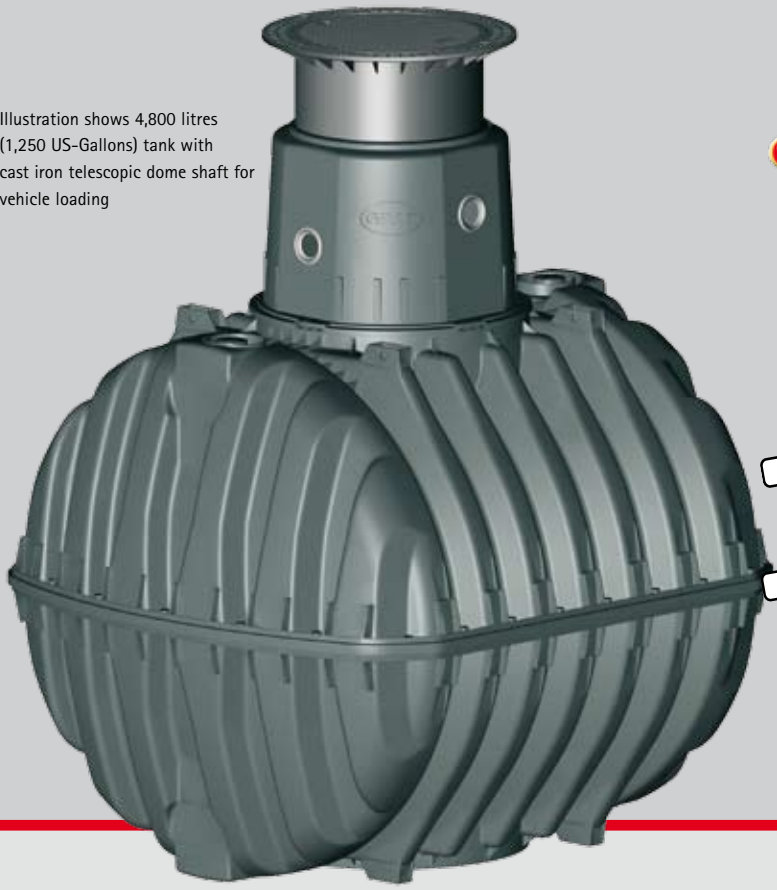

Illustration shows 4,800 litres (1,250 US-Gallons) tank with cast iron telescopic dome shaft for vehicle loading

15 years warranty

EINSTIEGSDOM nach DIN EINSTIEGSDOM

TÜV

European 0870877 Patent

US 5878907 Patent

Volume

Litres	US-Gallons
2,700	700
3,750	1,000
4,800	1,250
6,500	1,700
7,500*	2000*
9,600*	2,500*
13,000*	3,400*

* Set consisting of two Carat underground tanks

Technical data

Dimensions/weight	2,700 L 700 US-Gallons	3,750 L 1000 US-Gallons	4,800 L 1,250 US-Gallons	6,500 L 1,700 US-Gallons	7,500 L* 1,850 US-Gallons	9,600 L* 2,500 US-Gallons	13,000 L* 3,400 US-Gallons
Length	2,080 mm (81.9 inches)	2,280 mm (89.8 inches)	2,280 mm (89.8 inches)	2,390 mm (94.1 inches)	Set consisting of two Carat underground tanks		
Width	1,565 mm (61.6 inches)	1,755 mm (69.1 inches)	1,985 mm (78.1 inches)	2,190 mm (86.2 inches)			
Heigth (including tank dome)	2,010 mm (79.1 inches)	2,200 mm (86.6 inches)	2,430 mm (95.7 inches)	2,710 mm (106.7 inches)			
Height of tank dome	610 mm (24.0 inches)						
Internal Ø tank dome	800 mm (31,5 inches)						
Weight	120 kg (265 lbs.)	150 kg (331 lbs.)	185 kg (408 lbs.)	220 kg (485 lbs.)			
Load							
Max. axle load	Car-bearing				see 3,750 L tank	see 4,800 L tank*	see 6,500 L tank*
Earth covering	800 - 1,200 mm (31.5 - 47.2 inches)						
Groundwater							
Groundwater stable	up to the middle of the tank				see 3,750 L tank	see 4,800 L tank	see 6,500 L tank
Required earth covering	800 mm (31.5 inches)						



For dimensions see 3,750 L tank*



For dimensions see 4,800 L tank*



For dimensions see 6,500 L tank*

Garden Comfort package

The simple garden solution with submersible pump system



Carat Garden Comfort underground tank package

- Simple to install and use
- Use a simple hose connection socket and pressure sensitive pump for automatic water activation, purposely designed for the Gardena® system
- Low visual impact
- Reduces electricity consumption by using a pressure drop activation system, so that electricity is only used when required

Scope of supply

① Carat underground tank
② Mini telescopic dome shaft for pedestrian loading with an adjustable PE lid
③ Filter package 2, consisting of:
- Internal Universal Filter 3
- Inflow stilling system for controlling the water inflow
- Overflow siphon and rodent guard
- Spannfix pipe connection sleeve

④ Garden Comfort pump package, consists of:
- Integra-Duo® 1100 Submersible pump, with protection against dry running and automatic Start / Stop function
- Floating water extraction unit
- Water hose connection box
- 10 m of pressure hose

Volume

Litres	US-Gallons
2,700	700
3,750	1,000
4,800	1,250
6,500	1,700
7,500*	2,000*
9,600*	2,500*
13,000*	3,400*

* Set consisting of two Carat underground tanks

Vehicle loading version available on request

Eco-Plus package

The ideal solution for use in the home and garden

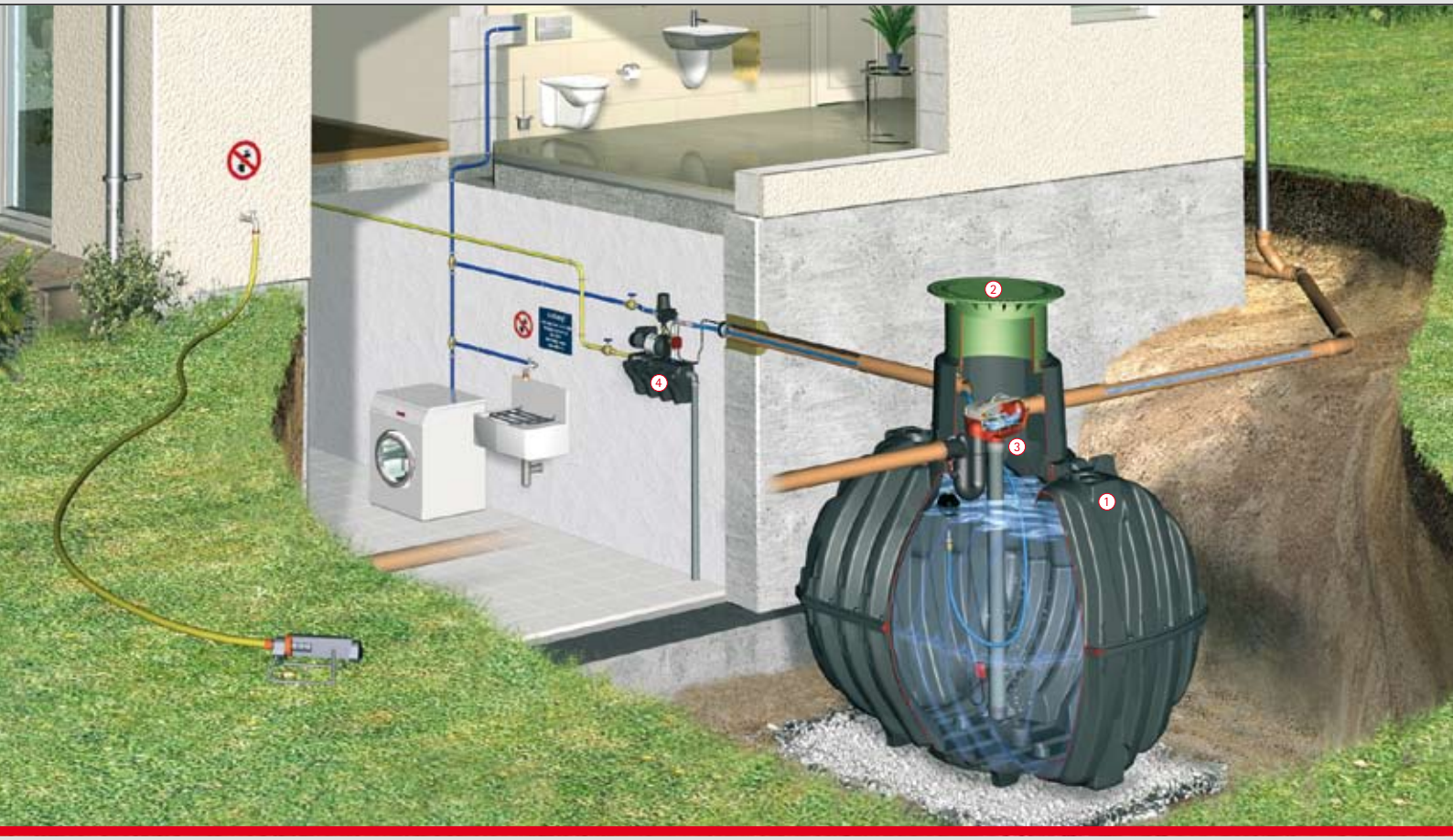

Carat underground tank package Eco Plus

- Economic package solution
- Patented filter technology and in-house pump system with automatic switch-over to mains water supply
- Easy to assemble due to modular components
- Float switch controlled
- Only one cover viewable on the surface

Scope of supply

① Carat underground tank
② Maxi telescopic dome shaft for pedestrian loading with an adjustable PE lid
③ Filter package 3, consisting of:
- Internal Optimax-Pro (self-cleaning) filter
- Inflow stilling system for controlling the water inflow
- Overflow siphon and rodent guard
- Spannfix pipe connection sleeve

④ Eco-Plus pump package consists of:
- Water supply control unit
- Floating water extraction unit
- DN 100 wall duct
- Labelling set
- Suction pipe

Volume

Litres	US-Gallons
3,750	1,000
4,800	1,250
6,500	1,700
7,500*	2,000*
9,600*	2,500*
13,000*	3,400*

*Set consisting of two Carat underground tanks

Vehicle loading version available on request

Internal filter technology

NEW

Efficient cleaning system with high water yield

Optimax Pro, self-cleaning Filter

Advantages

- Provides over 95% water yield
- Utilises patented, high quality filter technology
- Low-maintenance (self-cleaning)
- TÜV-tested to German standards
- Space-saving filter technology inside the tank
- Filter housing can be easily removed without the need for tools
- Transparent lid for filter visibility
- **Can manage roof areas up to 350 m²**
- Standard 100 mm connections
- Self cleaning Opticlean system available as an optional extra
- Low offset height of 165 mm between inlet and outlet



Universal Filter 3

up to 100% water yield

Advantages

- Allows up to 100% water yield
- Ideal for small roof surfaces
- Space-saving filter technology inside the tank
- The Filter housing can be easily removed without the need for tools
- Ideally suited when connecting the tank to a soakaway
- 250 mm offset height between inlet and outlet
- **Can manage roof areas up to 350 m²**
- Standard 100 mm connections
- Emergency overflow system available (optional extra)

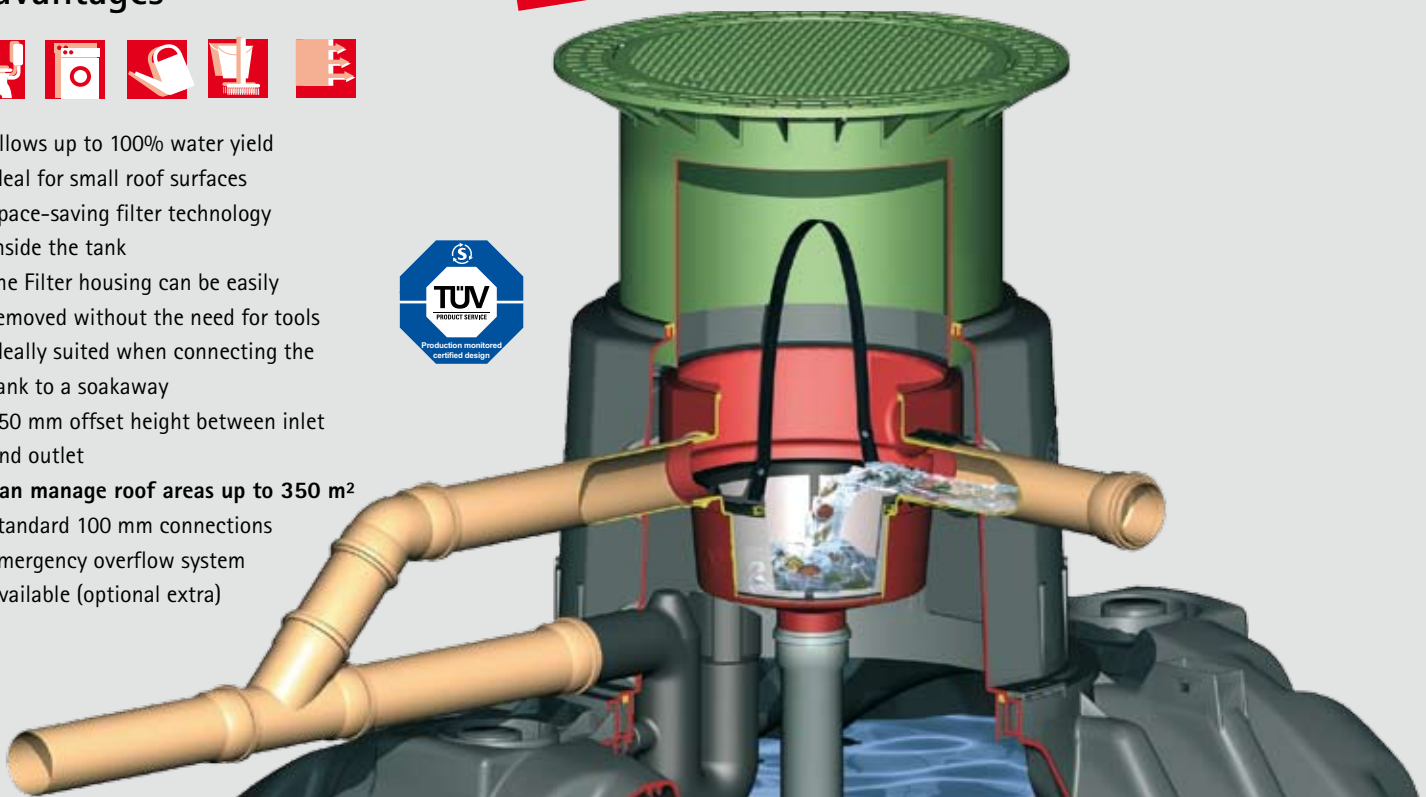

GRAF – Setting the standards in quality



Production site at Teningen (Germany) near Freiburg



Production site at Dachstein (France)

High Quality Manufacturing

GRAF has invested more than € 20 million in a new production site specially set up for the new CARAT range. The new facility has an approximate surface area of 155,000 m² - that equals 31 football pitches - one of the most modern production facilities for plastic products in the world

For over 40 years, Otto Graf GmbH has been offering high-class plastic products to its customers. In 1974 GRAF developed its first pioneering range of rainwater harvesting products. Now GRAF is recognised as Germany's number one rainwater harvesting brand and proudly presents the new premium Carat range of the tanks. A range which is manufactured in one of the most modern and efficent plastic manufacturing facilities in the world!

RAINWATER HARVESTING



STORMWATER MANAGEMENT



AGRICULTURAL CONTAINERS



SEWAGE TREATMENT PLANTS



Warranty clause:
The warranty mentioned in this brochure only refers to the tank in question and not to the accessories. Within the warranty period we grant free replacement of the material. Further benefits are excluded. Pre-condition for warranty benefits are proper handling, assembly and installation according to the mounting guidelines.

N.B. Protect tanks from frost when installed above-ground! In case of groundwater installation, please contact us for further information previous to the purchase!

For all indications of measurements in this brochure we reserve a tolerance of +/- 3%. The useful volume of the tanks may be up to 10% lower than the tank capacity, according to the connecting option.

Technical modifications and further development of the different products are subject to change. Errors excepted.

Otto Graf GmbH
Kunststofferzeugnisse
Carl-Zeiss-Straße 2-6
79331 Teningen / Germany

Phone: +49 (0) 76 41/5 89-0
Fax: +49 (0) 76 41/5 89-50
info@graf-online.de
www.graf-online.de

Over 40 years of quality and innovation

© Otto Graf GmbH, Teningen. Germany
Reproduction – also in extracts – only with written authorisation.

9.3 Appendix C:

BREEAM calculator for the existing offices:

BREEAM 2018 Wat 01 Water consumption: Water efficiency calculator for new non domestic office buildings

BREEAM® UK delivered by bre

Building type	Description of building type	Default occupancy	Default annual days/operation	Default daily hours of operation
Office	Offices and workshop business (including those with a basic (category 1) laboratory area)	16.095	253	10

Main building activity areas	Description of activity area	Activity area present in building?	Net Floor Area (m^2)
Office - Office areas	Cellular or open plan office space, including staff kitchen where present/adjacent and reception areas. Exlcude meeting rooms, visitor waiting or circulation areas.	Yes	145
Office - Small workshop / laboratory space	Small scale workshop or category 1 laboratory area	No	
Office - Staff canteen dining area	Seated dining areas that accompany a permanently staffed kitchen preparing food for consumption on the premises (excludes small un-staffed kitchen's used by office staff to re-heat food, make tea etc.)	No	
Office - Fitness suite/gym (with changing facility and showers)	A fitness suite or gym that is part of the office building/development and used by the building's employees only. The gym will have its own changing facility with showers.	No	

Note: tl
large, to
present

Note: C
kitchen

Water consumption - building microcomponent

WC component - all activity areas	units	Specification	Usage/person/day	Usage factor	Consumption (L/person/day)
WC - male (no urinals installed)	Effective flush volume (Litres)	3.50	4.00	1.00	7.00
WC - female	Effective flush volume (Litres)	3.50	4.00	1.00	7.00

Note: W
6 litres
ratio of

Urinal component - all activity areas	units	Specification	No. of cisterns	Flushing frequency (flushes/hour)	Consumption (L/person/day)

	units	Specification	Usage/person/day	Usage factor	Consumption (L/person/day)

	units	Specification	Usage/person/day	Usage factor	Consumption (L/person/day)

Taps components (personal hygiene) - all activity areas	units	Specification	Usage/person/day	Usage factor	Consumption (L/person/day)
Wash hand basin taps	Flow rate (litres/min)	2.50	4.00	0.25	1.69
Shower use	Flow rate (litres/min)	0.00	0.030	5.60	0.00

Fixed use - vessel filling	Litres/person/day	-	-	-	1.58
Tap components (cleaning) - staff kitchenette					
Kitchen taps - kitchenette	Flow rate (litres/min)	4.50	1.00	0.67	2.04
Dishwasher	Litres/cycle	0.00	0.04	1.00	0.00
Tap components (cleaning and food preparation) - staff canteen food preparation area					

	Microcomponent consumption (L/person/day)
Total	19.31

Note: T
a more
improv
specific

Minimum requirements according to EU taxonomy for sustainable finance

Do all the installed wash hand basin taps and kitchen taps have a maximum water flow of 6 litres/min?	Yes
Do all the installed showers have a maximum water flow of 8 litres/min?	System not specified
Do all WCs, including suites, bowls and flushing cisterns, have a full flush volume of a maximum of 6 litres and a maximum average flush volume of 3,5 litres?	System not specified
Do all urinals use a maximum of 2 litres/bowl/hour and flushing urinals have a maximum full flush volume of 1 litre?	System not specified
Is all the EU taxonomy requirements for sanitary equipment met?	Yes

Non potable water yield - greywater system

Has, or will, the greywater system be specified and installed in compliance with BS8525-1:2010 Greywater Systems - Part 1 Code of Practice	No

Greywater source (building components)	Greywater collected	Proportion of components collected from (%)	Greywater yield (L/person/day)

Greywater source (other components)	Typical greywater yield (litres)	Frequency of yield (days)	Greywater yield (litres/day)	Greywater yield (L/person/day)

	Greywater yield (L/person/day)
Total	0.00

Non potable water yield - rainwater system

Has, or will, the rainwater system be specified and installed in compliance with BS EN 16941-1:2018 Rainwater Harvesting Systems - Code of practice	No

How has the storage capacity for the proposed system been calculated?	

Rainwater yield if basic approach:

Collection area (m2)	Rainfall (average mm/yr)	Hydraulic filter efficiency (%)	Yield co-efficient (%)	Annual rainwater yield (Litres)	Rainwater yield (L/person/day)

Rainwater yield if detailed:

Daily rainfall collection (litres)	Rainwater yield (L/person/day)

Non Potable Water Demand - Building Components

	Greywater and/or rainwater yield (L/person/day)
Total	

Component	Greywater and/or rainwater utilised for component	Proportion of components using greywater and/or rainwater yield (%)	Maximum permissible demand (L/person/day)

	Demand met by yield (L/person/day)
Total	

Other permissible components

	Maximum permissible demand (L/day)

	Demand met by yield (L/person/day)
Total	

	Greywater and/or rainwater demand met by yield (L/person/day)
Total	

Water consumption calculation results

	Litres/person/day	m^3/person/yr
Water consumption - modelled baseline performance benchmark (excludes fixed uses)	**76.40**	**19.33**

Microcomponent water consumption - modelled performance (excludes fixed uses)	**17.73**	**4.49**
Modelled water demand met via greywater and rainwater sources	**0.00**	**0.00**
If greywater/rainwater systems specified has the minimum % efficiency improvement for component specifications been met	**System not specified**	
Net modelled water consumption (excludes fixed uses)	**17.73**	**4.49**
Percentage improvement	**76.78%**	
Total Wat 01 BREEAM credits achieved, before checking minimum requirements according to EU taxonomy for sustainable finance.	**5 credits**	
Total Wat 01 BREEAM credits achieved	**5 credits**	
Total Wat 01 BREEAM Exemplary credits achieved	**1 innovation credit achieved**	
Key performance indicator - use of freshwater resource (includes fixed uses)	**19.31**	**4.89**

9.4 Appendix D:

BREEAM calculator for the proposed offices:

BREEAM 2018 Wat 01 Water consumption: Water efficiency calculator for new non domestic office buildings

BREEAM® UK delivered by bre

Building type	Description of building type	Default occupancy	Default annual days/operation	Default daily hours of operation
Office	Offices and workshop business (including those with a basic (category 1) laboratory area)	16.095	253	10

Main building activity areas	Description of activity area	Activity area present in building?	Net Floor Area (m^2)
Office - Office areas	Cellular or open plan office space, including staff kitchen where present/adjacent and reception areas. Exlcude meeting rooms, visitor waiting or circulation areas.	Yes	145
Office - Small workshop / laboratory space	Small scale workshop or category 1 laboratory area	No	
Office - Staff canteen dining area	Seated dining areas that accompany a permanently staffed kitchen preparing food for consumption on the premises (excludes small un-staffed kitchen's used by office staff to re-heat food, make tea etc.)	No	
Office - Fitness suite/gym (with changing facility and showers)	A fitness suite or gym that is part of the office building/development and used by the building's employees only. The gym will have its own changing facility with showers.	No	

Note: tl
large, t
present

Note: C
kitchen

Water consumption - building microcomponent

WC component - all activity areas	units	Specification	Usage/person/day	Usage factor	Consumption (L/person/day)
WC - male (no urinals installed)	Effective flush volume (Litres)	3.50	4.00	1.00	7.00
WC - female	Effective flush volume (Litres)	3.50	4.00	1.00	7.00

Note: W
6 litres
ratio of

Urinal component - all activity areas	units	Specification	No. of cisterns	Flushing frequency (flushes/hour)	Consumption (L/person/day)

	units	Specification	Usage/person/day	Usage factor	Consumption (L/person/day)

	units	Specification	Usage/person/day	Usage factor	Consumption (L/person/day)

	units	Specification	Usage/person/day	Usage factor	Consumption (L/person/day)

Taps components (personal hygiene) - all activity areas					
Wash hand basin taps	Flow rate (litres/min)	2.50	4.00	0.25	1.69
Shower use	Flow rate (litres/min)	0.00	0.030	5.60	0.00
Fixed use - vessel filling	Litres/person/day	-	-	-	1.58
Tap components (cleaning) - staff kitchenette					
Kitchen taps - kitchenette	Flow rate (litres/min)	4.50	1.00	0.67	2.04
Dishwasher	Litres/cycle	0.00	0.04	1.00	0.00
Tap components (cleaning and food preparation) - staff canteen food preparation area					

	Microcomponent consumption (L/person/day)
Total	19.31

Note: T
a more
improv
specific

Minimum requirements according to EU taxonomy for sustainable finance	
Do all the installed wash hand basin taps and kitchen taps have a maximum water flow of 6 litres/min?	Yes
Do all the installed showers have a maximum water flow of 8 litres/min?	System not specified
Do all WCs, including suites, bowls and flushing cisterns, have a full flush volume of a maximum of 6 litres and a maximum average flush volume of 3,5 litres?	System not specified
Do all urinals use a maximum of 2 litres/bowl/hour and flushing urinals have a maximum full flush volume of 1 litre?	System not specified
Is all the EU taxonomy requirements for sanitary equipment met?	Yes

Non potable water yield - greywater system

Has, or will, the greywater system be specified and installed in compliance with BS8525-1:2010 Greywater Systems - Part 1 Code of Practice	No

Greywater source (building components)	Greywater collected	Proportion of components collected from (%)	Greywater yield (L/person/day)

Greywater source (other components)	Typical greywater yield (litres)	Frequency of yield (days)	Greywater yield (litres/day)	Greywater yield (L/person/day)

	Greywater yield (L/person/day)
Total	0.00

Non potable water yield - rainwater system

Has, or will, the rainwater system be specified and installed in compliance with BS EN 16941-1:2018 Rainwater Harvesting Systems - Code of practice	Yes
How has the storage capacity for the proposed system been calculated?	BS EN 16941-1 'detailed approach'

Rainwater yield if basic approach:

Collection area (m2)	Rainfall (average mm/yr)	Hydraulic filter efficiency (%)	Yield co-efficient (%)	Annual rainwater yield (Litres)	Rainwater yield (L/person/day)

Rainwater yield if detailed:

Daily rainfall collection (litres)	Rainwater yield (L/person/day)
263	16.34

Non Potable Water Demand - Building Components

	Greywater and/or rainwater yield (L/person/day)
Total	16.34

Component	Greywater and/or rainwater utilised for component	Proportion of components using greywater and/or rainwater yield (%)	Maximum permissible demand (L/person/day)
WC flushing	Yes	100%	14.00

	Demand met by yield (L/person/day)
Total	14.00

Other permissible components

Are there other permissible components present which demand greywater and/or rainwater yield?	No

Maximum permissible demand (L/day)
38

Proportion of maximum permissible demand utilised by other permissible components (%)	

	Demand met by yield (L/person/day)
Total	0.00

Greywater and/or rainwater demand met by yield (L/person/day)

Total	14.00

Water consumption calculation results

	Litres/person/day	m^3/person/yr
Water consumption - modelled baseline performance benchmark (excludes fixed uses)	**76.40**	**19.33**
Microcomponent water consumption - modelled performance (excludes fixed uses)	**17.73**	**4.49**
Modelled water demand met via greywater and rainwater sources	**14.00**	**3.54**
If greywater/rainwater systems specified has the minimum % efficiency improvement for component specifications been met	**Yes**	
Net modelled water consumption (excludes fixed uses)	**3.73**	**0.94**
Percentage improvement	**95.11%**	
Total Wat 01 BREEAM credits achieved, before checking minimum requirements according to EU taxonomy for sustainable finance.	**5 credits**	
Total Wat 01 BREEAM credits achieved	**5 credits**	
Total Wat 01 BREEAM Exemplary credits achieved	**1 innovation credit achieved**	
Key performance indicator - use of freshwater resource (includes fixed uses)	**5.31**	**1.34**