Figure 2 Default specification for protective fencing

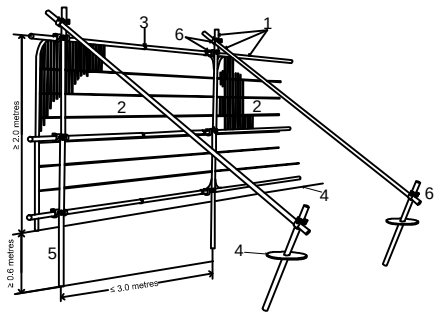

Key
1 Standard scaffold poles
2 Heavy gauge 2 m tall galvanized tube and welded mesh infill panels
3 Panels secured to uprights and cross-members with wire ties
4 Ground level
5 Uprights driven into the ground until secure (minimum depth 0.6 m)
6 Standard scaffold clamps

Key

BS5837:2012 recommended root protection area

Protective fencing (fig 2 inset)

Cellular confinement surface. To be installed over existing culverted and made up ditch crossing.eg Cellweb to be installed in accordance with technical advice and AMS
https://www.geosyn.co.uk/downloads?pId=231

Roadstone car park to act as site compound

No dig raised path, timber edging supporting geotextile membrane overlaid with bark chippings

Below ground service route (installed)

NOTES

- Do not scale from this drawing
- Report any discrepancies to the Architect
- Check dimensions on site prior to starting work

Hazel (one stool to remove)

T1 T2 T3 T4 T5 T6 T8 T9 T10 T11 T12 T13 T14 T15 T16 T17 T18

20m

Hay barn and material store

PEDESTRIANS & HORSES ONLY

FARM VEHICLES

SAND SCHOOL

Bore hole with 3sqm plant room

Road stone access.

Grass track reinforced with road planings approved under DC/22/1276

No dig above ground installation of cellular confinement surfacing eg Cellweb by Geosynthetics.

Post & Rail fence

STABLE BLOCK WITH WASH DOWN AREA AND EQUIPMENT STORE/DAYROOM

17.0 metres from woodland edge (non designated ASNW) - cyan line

17.0 metres from woodland to east of stream - magent

All construction access from south side

Car park area to be used as site compound/ welfare during build

FLOOD ZONE 3

New native hedge screen to approximately 1.8 metres height.

MANURE STORE

BIN STORE

TEMPORARY SHED

Woodland W1

INDICATIVE LOCATION OF POND. ARISINGS FROM EXCAVATION TO BE KEPT AWAY FROM TREES

INDICATIVE ONLY

SCALE BAR: 1:500 Scaled for planning purposes only
0m 10m 20m

Phasing of works
1/ Contractor to provide named contact for all Arboricultural matters
2/ Tree removal (1x small Hazel) as indicated to be undertaken.
3/ Protective fencing to be installed in accordance with figure 2 prior to commencement of any other site works or movement of plant onto site in accordance with the detail of this plan (solid blue line).
4/ The cellular confinement surface to be installed prior to any other access.
5/ Installation of the sub base for the car park area.
6/ Installation of the above ground section of path.
7/ New build to take place.
8/ Protective fencing and ground protection measures to be removed following practical completion, undertaken with the agreement of the retained Arboricultural Consultant.

This document is to be made available on site (as colour copy).

This document to be read in conjunction with arboricultural survey and constraints report reference tr-1654-22.

The arboricultural method statement is to be complied with by all contractors and subcontractors throughout site preparation and new build.

Root Protection Areas (orange circles) are to be protected to the limits shown by the line of fencing indicated with a blue line on plan. Protective fencing to be installed in accordance with the inset drawing and **prior** to site works commencing and remain throughout construction.

A no dig cellular confinement surface to be installed in full accordance with manufacturers instructions to the area shown with cyan hexagonal hatching. to comprise filling of any hollows and levelling with clean sharp sand, laying a geotextile membrane, pegging out cellular confinement surface to limits of access, infilling voids with no fines type 3 MOT stone, laying further geotextile membrane and top dressing with coarse gravel. If required to retain top dressing to install above ground timber edging to be pegged in position. Installation process to be the subject of supervision by the retained arboricultural consultant.

Following this road stone for the car parking area to be installed to provide site storage and a welfare area during construction indicated with '+' hatching.

The path to the northwest side of the proposed buildings conflicts with the RPA's of tree T2 and T5 and is to be installed utilising a permeable 'no dig' approach. As a minimum this could comprise a geotextile membane overlayed with 150mm bark chippings edged with pegged timber board. All installation to be above existing ground levels and to be undertaken by hand. Plywood or metal sheet material should be put in place over the bark path during construction for additional load spreading. This area is indicated with magenta cross hatching.

All mechanical plant movement to access the construction envelope will be from the south (red line) via the car park area and not use the path between the buildings and the tree line.

Visible signage should be installed to the protective fencing advising of its function for example 'Tree Protection Area - no access permitted).

Once installed no movement of fencing should occur except with the agreement of the retained Arboricultural Consultant. No excavation or alteration of levels to occur within the Root Protection Areas (orange circles) without discussion with the retained Arboricultural Consultant.

A dedicated area for any bonfires to be centrally located on site equidistant from any trees.

The designated area for the preparation of materials for wet trades and for the storage of any materials capable of leaching to be agreed prior to commencement and to be sited within a bunded set up/contained environment to ensure no leakage of liquid or potentially toxic material including cementatious products. Any contained/ collected liquids or material to be removed from site.

All tree removal or management works are to be undertaken in accordance with BS3998:2010 and current best practice. All further tree related inspections, monitoring and liaison between the contractor and the local authority should be undertaken by the retained Arboricultural Consultants.

All access for any high sided vehicles, hiab or crane deliveries to be considered and planned well in advance to ensure adequate clearance along the access roads and track to the site. A banksman with assigned responsibility for tree protection to be present for all vehicles and plant entering and leaving site.

No new services are to be installed within the RPA's of trees to be retained.

Rev.	Date	Description

Ben Larkham Associates, 3 Princes Street,
Tunbridge Wells, TN2 4SL
TEL: 01892 684086 Email: office@benlarkham.co.uk

Job Title:
Limekiln Farm
Broadwater Lane
Copsale RH13 6QW

Drawing Title:
Arboricultural Method Statement
Condition 4 of DC/23/1325

Scale:	Drawn By:	Date:
1:500 at A3	BL	Nov 24

Drawing Number: tr-1825-24
Rev.: