Outdoor & Security Lighting

Bransford Wall Light with Photocell

GL-203P/BLK
Black

GL-203P/SS
316 Stainless Steel



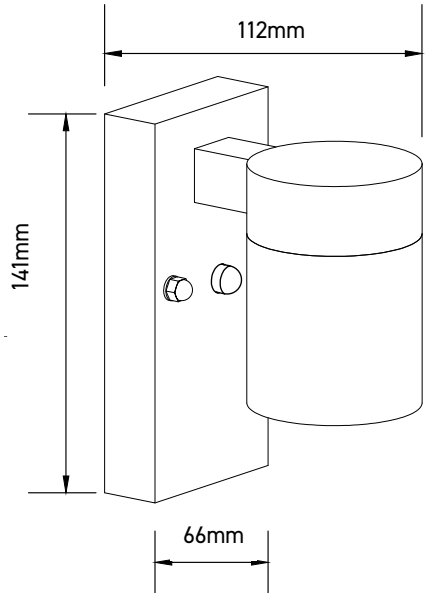

Specification

Voltage	230V
Wattage	5W
Lamp	incl.1 x 5W LED GU10
Colour Temp.	3000K
Lumens	495lm
IP Rating	IP44
Detection Range	6m/90°
Material BLK	Aluminium with Black Finish
SS	316 Stainless Steel

Description

The GL-203P wall light is Photocell activated, illuminating at dusk to provide light and security throughout the night.

Further information please contact **sales@gl-e.uk** or call **01905 610200**