BOX DRAWING - STEWART

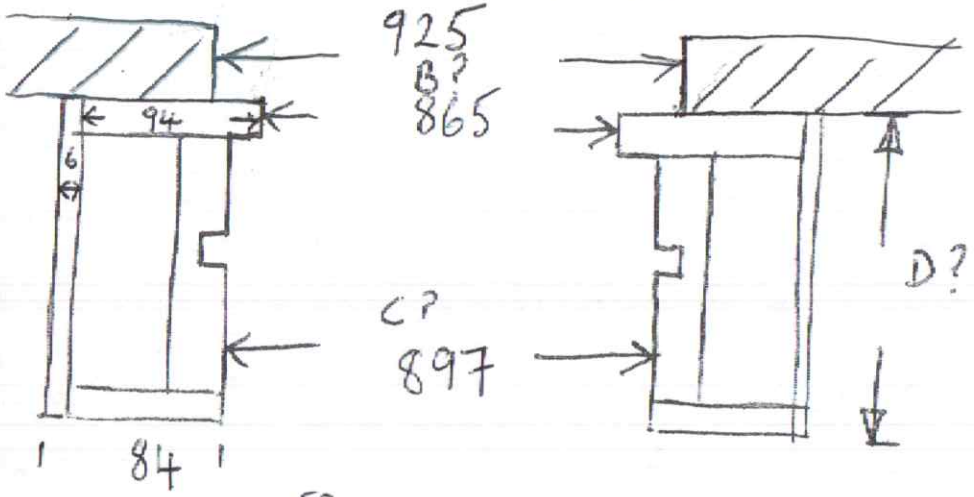

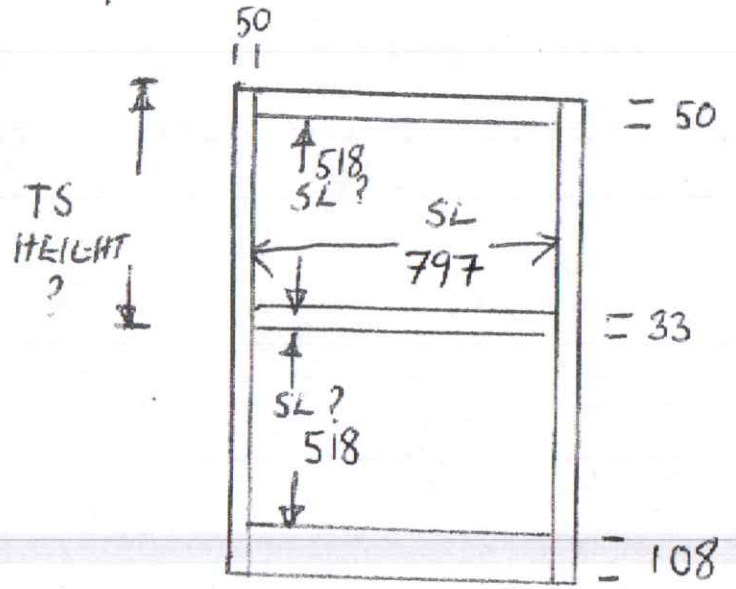

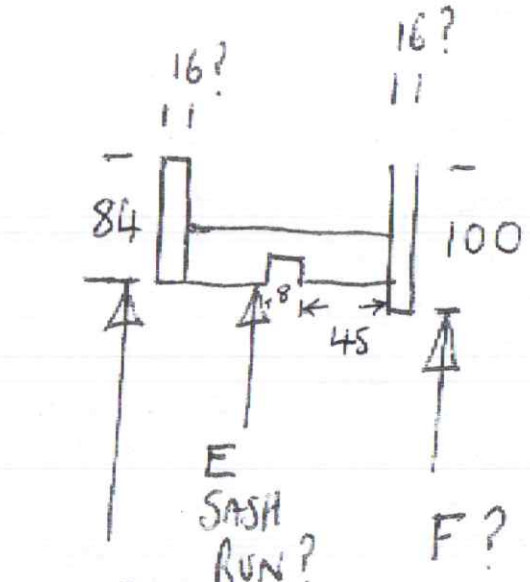

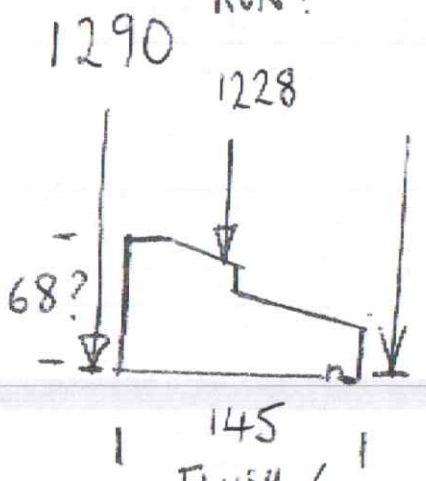

OR PROJECTING ?

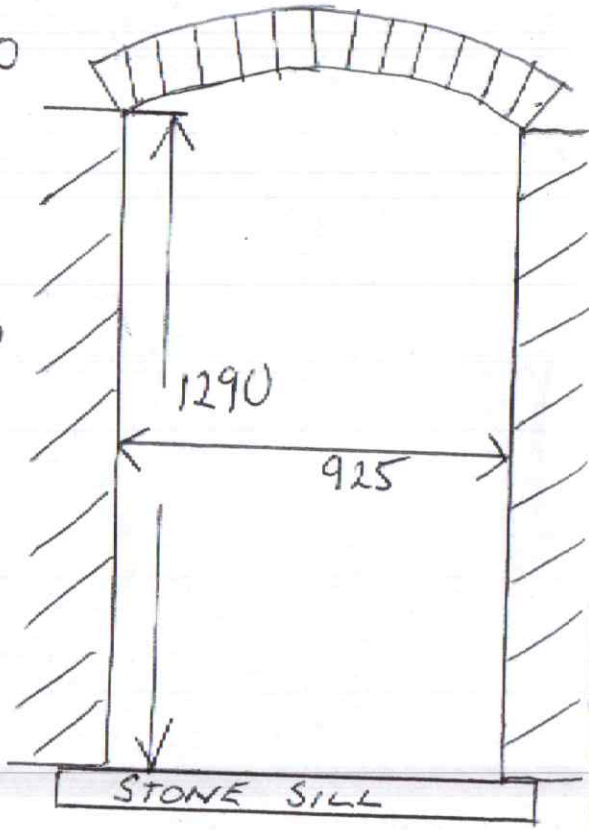

SASHES
GLAZING BARS ? OVER ?
HORNS + DETAIL