PROPOSED SECONDARY GLAZING

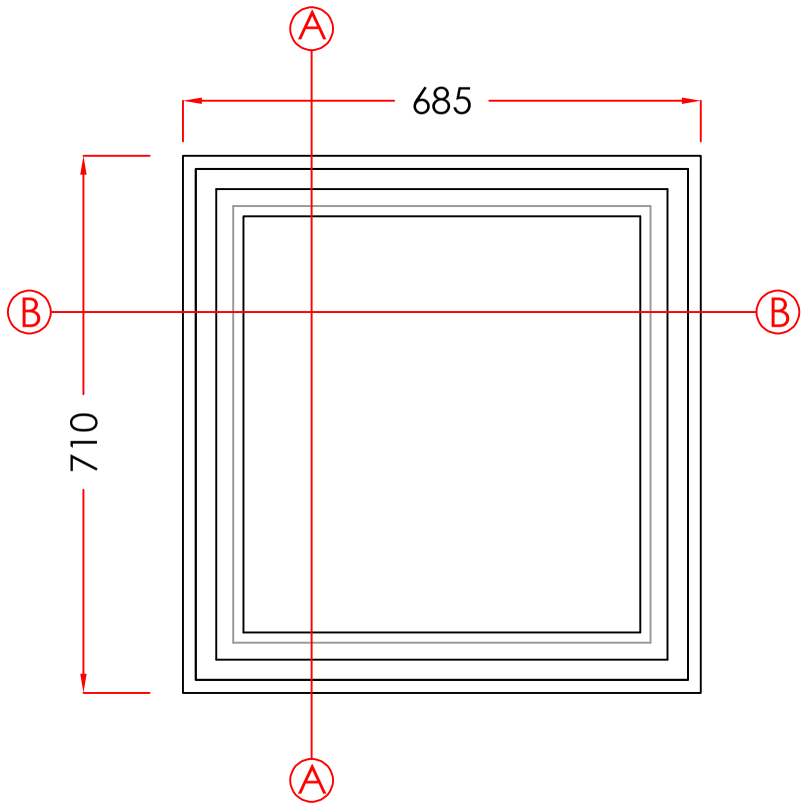

PROPOSED OUTER FRAME

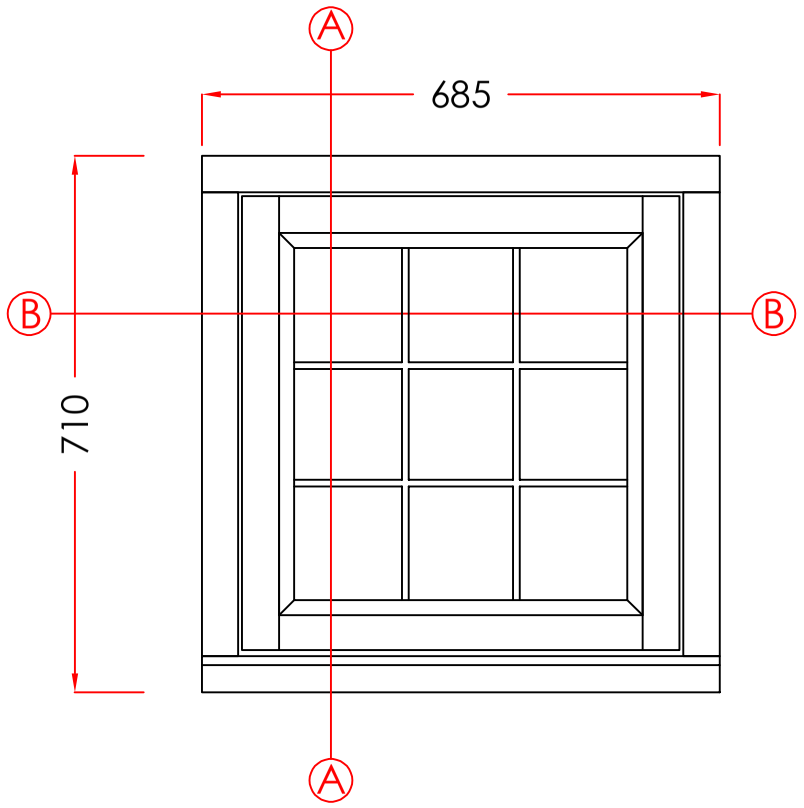

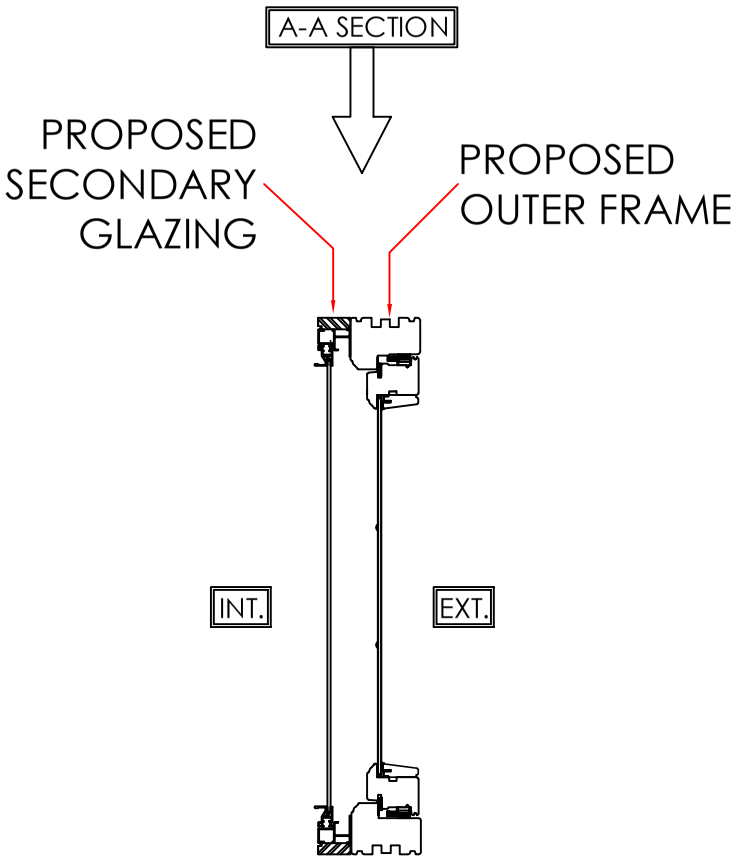

PROPOSED SECONDARY GLAZING

PROPOSED OUTER FRAME

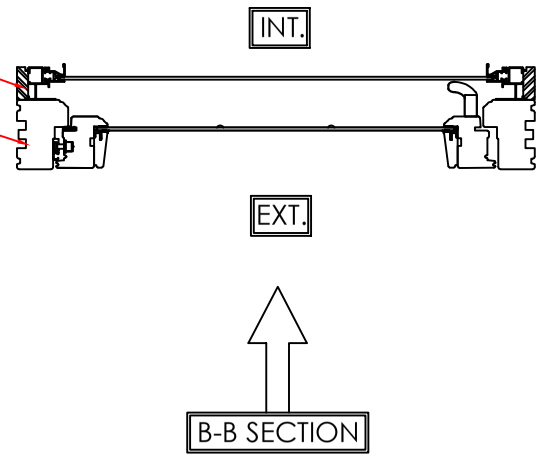

13 & 15. LOUNGE

MATERIAL - TIMBER
INTERNAL & EXTERNAL COLOUR - WHITE
GLAZING - 4MM SINGLE

Revision	Date	Amendments	Drawers Initials.
A	30/09/24	Designs amended	SF

CONTRACT No.: 30415674 **date:** 18/06/2024

PROPOSED: WINDOW REPLACEMENT
AT: (INSTALLATION ADDRESS)
14 DENNE PARK HOUSE
DENNE PARK
HORSHAM
WEST SUSSEX, RH13 0AZ

Anglian Home Improvements — Heritage TIMBER COLLECTION

VIEWED EXTERNALLY

THESE DRAWINGS ARE THE PROPERTY OF ANGLIAN HOME IMPROVEMENTS AND MUST NOT BE USED, DISTRIBUTED, LOANED OR COPIED WITHOUT THE EXPRESS PERMISSION OF ANGLIAN HOME IMPROVEMENTS.

Scale - 1:10
(Produced on A3 Paper)

Drawers Initials. SF

Scale Bar 1:10 (mm)
0 100 200 300 400 500 600 700 800 900 1000 1100 1200 1300 1400 1500