DESIGN AND ACCESS
&
HERITAGE STATEMENT

LAKERS FARM COTTAGE
MILL ROAD
WEST CHILTINGTON
PULBOROUGH
RH20 2PZ

Application submitted for the:

PROPOSED PROVISION OF A UTILITY ROOM
ADDITIONAL DOOR & NEW LIGHTING
June 2024



1.0 INTRODUCTION

1.1 This Heritage and Design and Access statement is submitted in support of an application for Listed Building Consent for the provision of a utility room on the ground floor, a door separating the Dining and Living areas and new downlights to both living and dining areas, including a smoke alarm system.

1.2 The proposal includes replacing the existing uPVC door with a timber stable style flood resistant door, and the removal of an 80s style arch that was added between the living and dining areas.

2.0 SITE DESCRIPTION

2.1 The application site is located in Mill Road West Chiltington with the main entrance on Mill Road with rear access onto Stream Lane.

2.2 Lakers Farm Cottage is a grade II listed building, list entry 1027146, previously Lakers Farm Cottages Nos 1 & 2.

2.3 Lakers Farm Cottage is a small 18th Century 2 storey cottage, of stone rubble with red brick dressings and ashlar quoins. It has a tiled roof and timber casement windows.



Image 1: Aerial image of the application site (Source: Google Maps)

2.4 In terms of the surrounding context, it is noted that there is built form surrounding Lakers Farm Cottage in the form of various renovated buildings.

3.0 THE APPLICATION PROPOSAL

3.1 This application seeks Listed Building Consent for the following:

The removal of an 80s style plasterboard arch between the living and dining area. This was added at some stage by previous owners and is not in keeping with the cottage vernacular as seen in the images below. It is proposed to remove this arch and make good to the ceiling.





Images 2 & 3: Arch to be removed

3.2 The replacement of the uPVC rear access door. Again, this door was installed by previous owners and is not in keeping with the style of the cottage. It is proposed that it would be replaced with a timber flood door more in keeping with the character of the building and to reduce the risk of flooding from surface water.

Lakers Farm cottage is in an area with a high risk of surface water flooding and the rear garden is some 1100mm above the ground floor finished floor level.

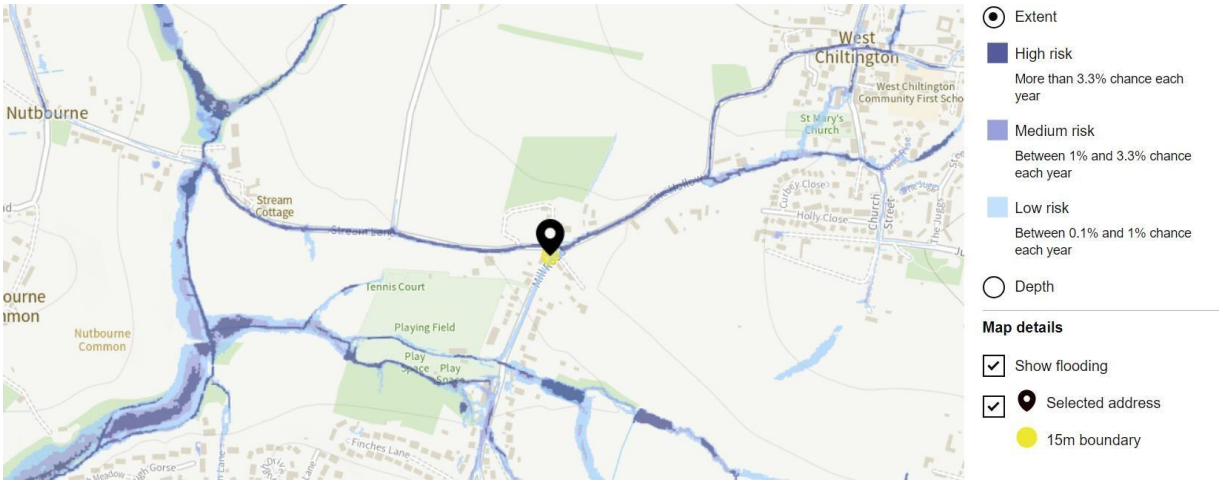

Image 4: Map of surface flooding risk area (flood risk service.gov.uk)



Image 5: Existing uPVC door.



Image 6: Proposed Style of new door 1



Image 7: Proposed Style of new door 2

3.3 The erection of a partition with door to provide a utility area.

Currently there is a washing machine under the stairs near the kitchen but there is no space for sorting clothes, handwashing, tumble-dryer etc. The provision of a utility area ensures that this home is suitable for the family's basic laundry requirements as well as allowing space for the dog.

We believe there was originally a partition in this location as the ceiling beam has cut-outs for vertical posts and would be a mirror of the partition at the opposite end of the cottage. This partition was probably removed when the 2 cottages were joined together to form one dwelling.





Images 8 & 9: Beam with cut-outs for vertical posts



Image 10: Proposed position of partition to provide utility area

The construction of the partition would allow for a timber batten to be glued, using dissolvable glue, to the underside of the beam and walls so that the partition would be fixed to the battens and not the beam, to ensure no damage to the structure of the building.

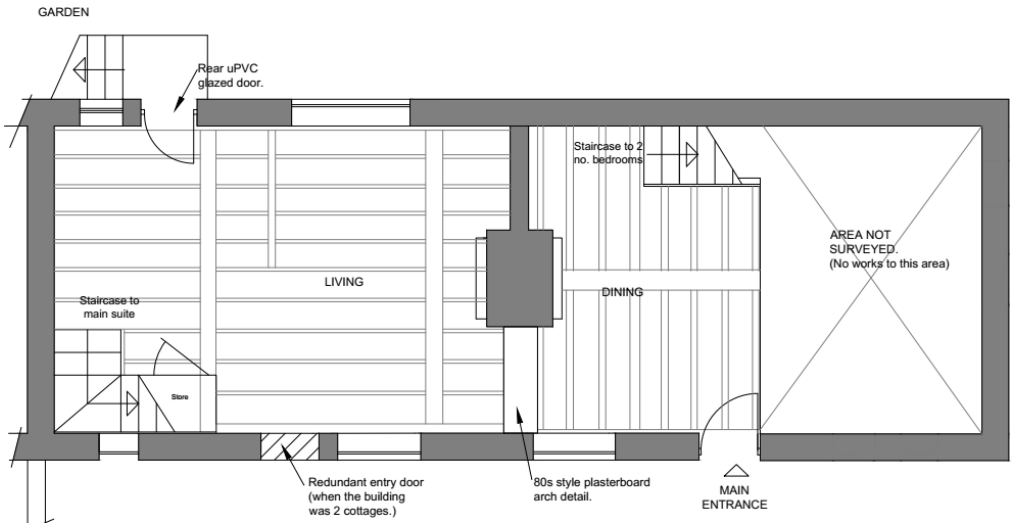

Image 11: Existing Ground Floor Layout

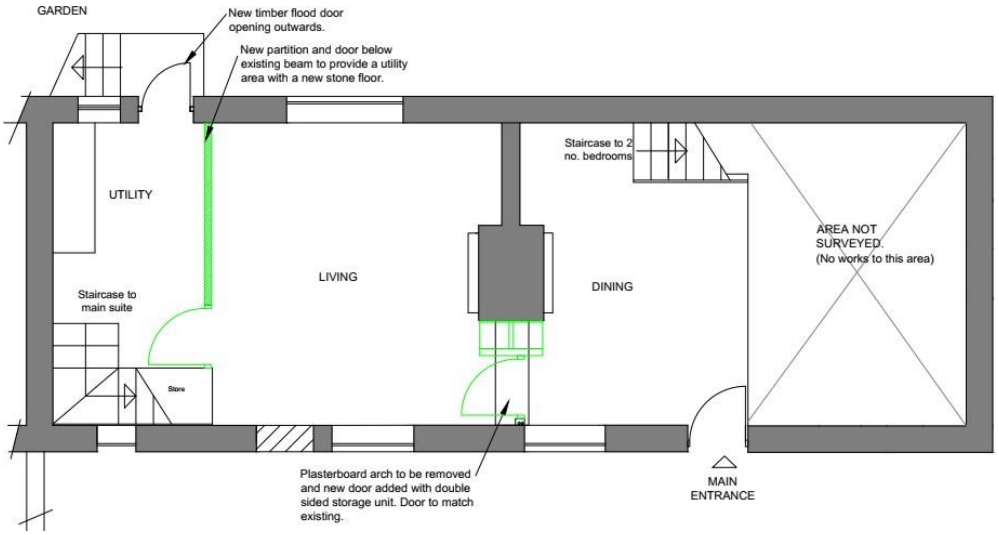

Image 12: Proposed Ground Floor Layout

3.4 The installation of a door between the Living and Dining areas.

The occupants of the cottage would like to have separation between the living and dining areas to keep food smells etc. within the dining area as well as providing a quieter area for the children to do supervised homework without the distraction of others. This ,along with the new partition would improve the heat retention properties in the living room.

It is proposed to install a door and frame to match the existing doors, with a double-sided shelving unit to provide much needed additional storage. We believe the location of this doorway would be in the position of the original demise wall between the two cottages (please see floorplan in Image 11) so that this again is in keeping with the integrity of the original cottage layout.
The storage element would be simple rustic open shelves.

3.5 The installation of low energy downlights.

At present the lighting levels in the living areas is very low, and when the existing wall lights, even when supplemented by table lamps, are turned on there is an insufficient lux level for everyday tasks, such as reading, writing or playing the keyboard.
It is therefore proposed to lower sections of the ceiling between the beams to allow for the installation of low-energy downlights.

Apart from two crossbeams, the remaining beams in the living area are not original. The installation of low-energy downlights would therefore not harm the integrity of the building in any way and would also ensure that the cabling would be concealed.



Image 13: Proposed lighting would be located between the beams

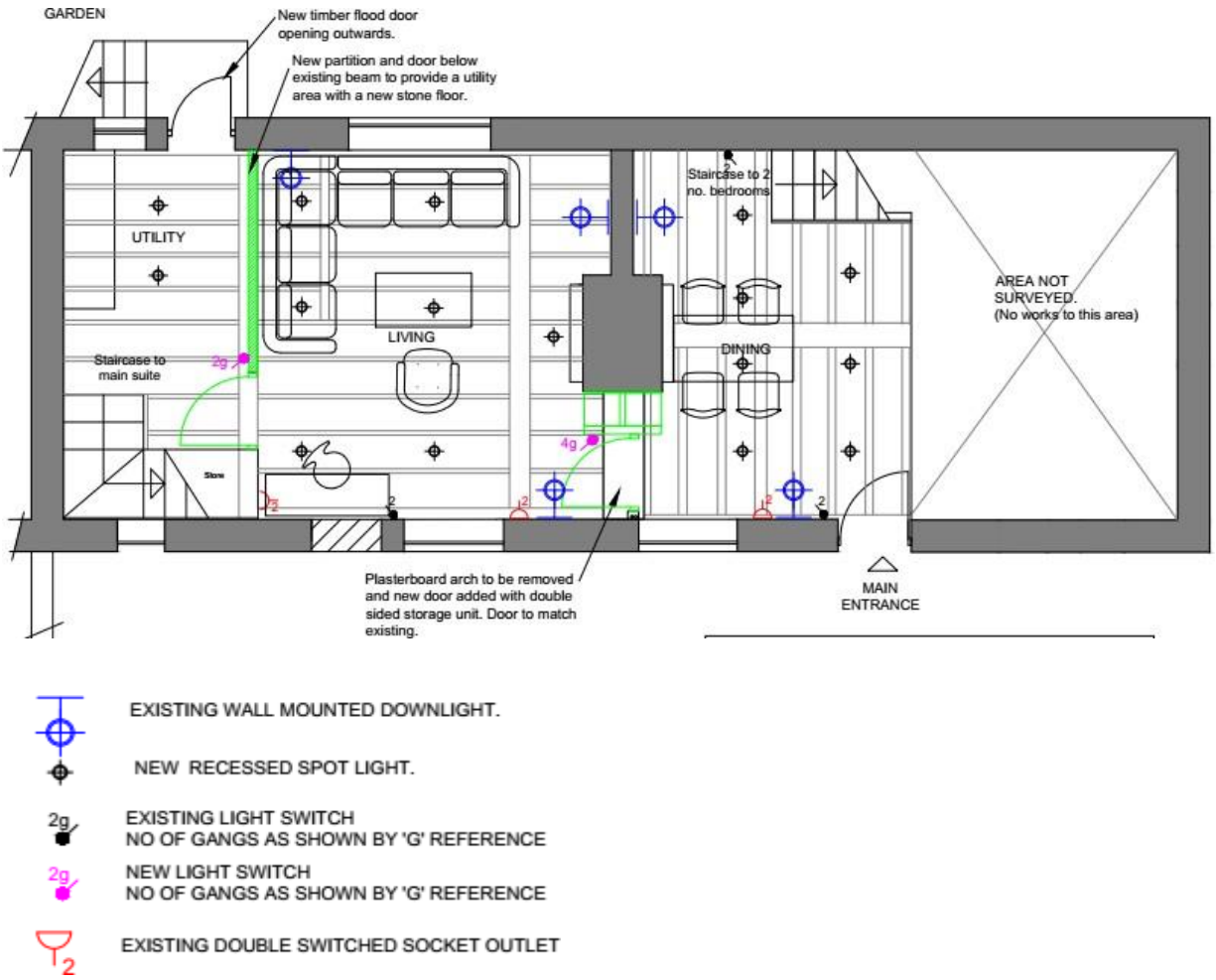

Image 11: Ceiling plan showing proposed new lighting

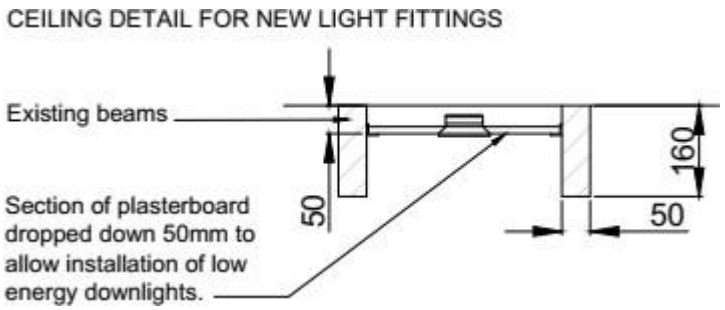

Image 12: Ceiling Detail

4.0 MATERIALS AND WASTE

4.1 The new rear door will be a timber flood-proof door in a heritage style.

4.2 The proposed internal doors would be 1no.existing door reused and 1no new door made to match the existing.



Image 13: Existing door to be reused.

4.3 It is not anticipated that any hazardous waste (e.g. Asbestos, chemicals, oils etc.) would be encountered during the course of the works. I any such materials were found they would be removed and disposed of by licensed operators.

4.4 The anticipated waste during the course of the works include: Timber, paper and paint. Some of the waste will be recyclable and some will require disposal.

4.5 All waste will be cleared as and when it is created to prevent any trip hazards.

5.0 MANAGEMENT

5.1 Access to the site will be via the rear entrance of Stream Lane utilizing the owners garage space for a contractor's van and the front entrance on Mill Road.

5.2 During the works appropriate measures would be put in place to ensure the Health and Safety of the workers and to minimise any disruption to neighbouring properties.

5.3 Working hours would be by consent and it is proposed that these hours would be from 8am to 6pm Monday to Friday and 8am to 1pm on Saturdays.

5.4 Appropriate measures would be taken to minimise noise, dust and detritus emanating from the site during the project and to ensure access to neighbouring properties is kept clear.

6.0 SUMMARY AND CONCLUSION

6.1 The new partition and doors will be matched / existing in terms of materials and finishes so that there is no alteration to the character and appearance of the building as well as being in the location of original partitions and thereby maintaining the integrity of the original layout and providing an improvement to the amenities inside.

6.2 The replacement rear door will be more in keeping with the building in terms of design as well as providing much needed protection for surface water flooding prevalent in the area.

6.3 The proposed additional lighting will be within drop down sections of ceiling so that the fabric of the building is protected, while improving the lighting levels in the living areas

6.4 We believe that every care has been taken to preserve and protect the integrity of this heritage asset while still providing the amenities required for 21st century family life.