Broad Oak Tree Consultants Limited
Laurel House, Burwash Road, Broad Oak, Heathfield, East Sussex
TN21 8SS Tel: 01435 862444 office@broadoaktrees.co.uk

Arboricultural Association
Professional Member
Mr Tim Laddiman
Principal Consultant
(Membership No. PR1565)

ARBORICULTURAL IMPLICATIONS ASSESSMENT FOR PROPOSED GARAGE, DRIVE, EXTENSION AND ALTERATIONS

AT

WOODCUTTERS
FOREST ROAD
COLGATE
HORSHAM

BY

Tim Laddiman
BSc.(Hons) M.I.C.For. M.Arbor.A.
Chartered Arboriculturist

Our ref: J67.25
21st September 2025

CONTENTS

		Page No.
1.	INTRODUCTION	1
2.	GENERAL SITE DESCRIPTION	1
3.	SCOPE OF TREE SURVEY	1
4.	DATA COLLECTION	1
5.	RISK ASSESSMENT – INFORMATIVES	2
6.	RESULTS OF TREE INSPECTIONS	2
7.	BS CALCULATED ROOT PROTECTION AREAS (RPAs)	3
	ARBORICULTURAL IMPLICATIONS ASSESSMENT	
8.	REDEVELOPMENT PROPOSALS	4
9.	TREES FOR REMOVAL – REDEVELOPMENT	4
10.	POTENTIAL IMPACT OF PROPOSALS ON RETAINED TREES	5
11.	TREE PROTECTION MEASURES – FENCING	5
12.	GROUND PROTECTION MEASURES	6
13.	SITE OPERATIONS AND MATERIALS STORAGE	6
14.	SERVICES/DRAINAGE/SOAKAWAYS	6
15.	ARBORICULTURAL METHOD STATEMENT	6
16.	SUMMARY	7

APPENDICES:

1. EXPLANATORY SHEETS, TREE INSPECTION SHEETS
2. TREE CONSTRAINTS PLAN, DRAWING NO. J67.25/01Rev A
3. BS TABLE OF ROOT PROTECTION AREAS
4. TREE PROTECTION PLAN, DRAWING NO. J67.25/02
5. EXAMPLES OF FENCING SPECIFICATION AND SIGNAGE

1. INTRODUCTION

1.1 Broad Oak Tree Consultants Ltd. received instructions through Gould Baxter Architects, to undertake an inspection of trees located on and immediately adjacent to the site referred to as Woodcutters, Forest Road, Colgate, Horsham. The purpose of the inspection was to produce a base inventory of the tree stock and an Arboricultural Implications Assessment of redevelopment proposals.

1.2 The proposals are for the formation of a revised access leading onto a new access drive and triple bay garage with room over, together with extensions and alterations to the existing house and garage. Details of the proposals will have been submitted by Gould Baxter Architects and others.

1.3 The trees were inspected August 2025 by Tim Laddiman, BSc.(Hons) M.I.C.For. M.Arbor.A., Chartered Arboriculturist and Principal Consultant of Broad Oak Tree Consultants Ltd.

2. GENERAL SITE DESCRIPTION

2.1 The site is located on the north side of Forest Road with a detached house and garage set to the south west corner of a large wooded plot with an access drive, parking and landscaped gardens. To the north and west is woodland with a further residential property to the east.

3. SCOPE OF TREE SURVEY

3.1 All trees and shrubs of 75mm diameter or more at 1.5m above ground level were included in the survey. This included trees immediately adjacent to the site.

3.2 For the offsite trees estimates of location, dimensions and condition had to be made.

4. DATA COLLECTION

4.1 All trees were inspected from the ground and no climbing or specialist investigations were undertaken. Only those trees within the site boundary could be basally inspected, with the structural integrity of the trees located outside the site unconfirmed. Each tree was inspected to the requirements of Section 4.4 “Tree Survey” of BS 5837:2012 “Trees in Relation to Design, Demolition and Construction - Recommendations”.

4.2 The tree survey followed the numbered sequence from T1 – T70 inclusive. Tree numbers, together with BS recommended colour coding of condition, have been added to the Tree Constraints Plan, our drawing no. J67.25/01 Rev A in Appendix 2. This drawing also includes crown spreads based on four compass points and BS calculated root protection areas.

4.3 The following categories of information were obtained for each tree. Separate detailed tree survey sheets are attached in Appendix 1, together with comprehensive explanatory sheets which cover the details of the categories listed below.

(1) Tree reference number
(2) Species
(3) Height in metres
(4) Stem count
(5) Stem diameter or equivalent in millimetres
(6) Branch spread in metres
(7) Age class
(8) Height of crown clearance in metres
(9) Physiological condition
(10) Estimated remaining contribution in years
(11) Category grading
(12) Structural condition
(13) Preliminary management recommendations

4.4 Within the assessment of physiological condition and remaining contribution, a visual inspection of each tree was undertaken to assess the crown and stem for any weak structures, deadwood, hollows, forks or other defects that might affect its stability and safety. The base of each tree was also visually inspected, together with tapping and probing, to search for signs of root lifting, bark death or decay. Where stems were heavily ivy clad, no full assessment of structural integrity could be undertaken. Clearance of the ivy would be necessary for confirmation of tree condition.

5. RISK ASSESSMENT - INFORMATIVES

5.1 Although the potential risk to someone passing beneath a tree when the tree or part of it fails is relatively remote, the risk is present. This increases significantly in areas of consistent and regular usage on a year round basis, such as footpaths, gardens and roadways. Where static structures exist, the risks become constant and an assessment is made as to whether complete or partial failure of a tree could potentially cause physical damage to such structures.

5.2 Within the scope of any tree survey it is a fact that not all risks of stem or crown failure can be covered, particularly in relation to freak occurrences of weather when even healthy trees can suffer stem snap or windblow. There is also a well known propensity for mature trees to occasionally shed limbs for no discernible reason, even on calm days. Although relatively rare, limbs may occasionally be shed and this should be acknowledged as a risk that cannot entirely be mitigated.

6. RESULTS OF TREE INSPECTIONS

6.1 A total of 70 individual trees and small groups were inspected, ranging from young Cypress and Western Red Cedar of less than 15 years of age through to mature road side oaks of in excess of 200 years old. The majority of the trees within the extensive grounds are Oaks of similar age, with some later additions of other species including Beech and Silver Birch. Most of the trees have been crown raised in the past. The immediate grounds around the house include numerous shrub borders and young trees.

6.2 Of the trees inspected, the following is a breakdown of the various numbers of trees and groups in each BS category.

BS Category	Tree No.	Sub Total
A	1, 3, 31, 39,	4
B	2, G13, 19, G20, 21, 22, 24, 25, 26, 29, 30, 32, 33, 34, 35, 36, 37, 40, 41, 42, 43, 48, 51, 52, G53, 57, 59, 62, 63, 64, 65, 67, 69, 70	34
C	G4, 5, G6, 7, 8, 9, 10, 11, 12, 14, 15, 16, 17, 18, 23, 27, 28, 38, 44, 45, 46, 47, G49, 50, 54, 55, 56, 58, 60, 61, 66, 68	32
U		
	TOTAL	**70**

6.3 ***Interpretation of table***

Category A Retention most desirable. Of high quality and value and in such a condition as to be able to make a substantial contribution (a minimum of 40 years is suggested).

Category B Retention desirable. Of moderate quality and value and in such a condition as to make a significant contribution (a minimum of 20 years is suggested).

Category C Could be retained – of low quality and value. Poor crown form, heavily asymmetric, large numbers of similar species/size. Currently in adequate condition to remain until new planting could be established (a minimum of 10 years is suggested) or young trees with a stem diameter below 150mm.

Category U Trees for removal. Dead/dying/dangerous trees due to structural defects, fungal decay or root plate uplift. Those in such a condition that any existing value would be lost within 10 years and which should, in the current context, be removed for reasons of sound arboricultural management.

7. BS CALCULATED ROOT PROTECTION AREAS (RPAs)

7.1 To provide an indication of the critical areas of root plate necessary for tree survival and longevity, BS 5837:2012 requires the calculation of RPAs for trees in the BS Categories A, B and C. Calculations are not made for Category U trees which will require removal on safety grounds within 10 years.

7.2 The table in Appendix 3 has been calculated using the measured stem diameters and the formula as described in Section 4.6 in BS 5837:2012. These are represented as basic circles on the Tree Constraints Plan. Where buildings, walls, services and hard surfacing exist within the indicated RPAs it is likely that the architecture of root systems will have been affected. Foundations to walls and buildings can completely obstruct root development, depending on their depth and the nature of the underlying soils. In the absence of detailed site investigations the indicated RPA circles should be used for guidance only within any redevelopment proposals.

8. REDEVELOPMENT PROPOSALS

8.1 The proposals are for the formation of a revised access leading onto a new access drive and triple bay garage with room over, together with extensions and alterations to the existing house and garage. Details of the proposals will have been submitted by Gould Baxter Architects and others.

8.2 The supplied Gould Baxter Proposed Site Layout has been used as the base for the Broad Oak Tree Consultants Ltd. Tree Protection Plan, drawing no. J67.25/02 in Appendix 4. This indicates trees for removal and measures to protect retained trees in accordance with BS5837:2012 requirements.

9. TREES FOR REMOVAL – REDEVELOPMENT

9.1 Based on the supplied layout proposal the following trees will require removal.

Table: Trees for removal – redevelopment

Tree No.	Species	BS Category	Comments
G4 (part)	Beech, Rhododendron, Holly	C	Eastern end of hedge only.
G6	Western Red Cedar	C	Compact non native screen.
T7	Rowan	C	Young, small tree.
T8	Cabbage Palm	C	Young, small, non native.
T9	Magnolia	C	Young, small tree of no public visibility.
T12	Bird Cherry	C	Small tree with decline.
T14	Silver Birch	C	Limited life span. Decline.
T43	Common Oak	B	Crowded. Minor crown thinning.
T44	Common Oak	C	Crowded, heavily asymmetric crown.
T50	Common Oak	C	Crowded, heavily asymmetric crown.
T54	Common Oak	C	Crowded, thin crown. Limited lifespan.

9.2 The majority of the trees on the site are retained within the proposals, with minimal potential visual impact in relation to heavily restricted public views or overall landscape context. New planting has been proposed by others to offset the proposed tree losses, the majority of which are BS Category C and as such should not represent a constraint, according to BS5837:2012.

9.3 The trees for removal for redevelopment purposes are indicated as such with blue dashed crown outlines on the Tree Protection Plan.

9.4 All tree work will need to be carried out by a competent tree surgeon to comply with BS3998:2010 “Tree Work - Recommendations”.

9.5 All trees recommended for felling will need to be checked for the presence of bats or nesting birds prior to works commencing. Disturbance to bats or nesting birds could contravene the Wildlife and Countryside Act 1981 and result in prosecution.

10. POTENTIAL IMPACT OF PROPOSALS ON RETAINED TREES

10.1 The proposed garage does not overlap with any retained tree RPAs. Nor does the extensions or alterations to the existing house and garage building, beyond existing footprints.

10.2 The widened drive by the existing garage will overlap with the outer RPA of T2 and T3. To avoid adverse impacts the additional area of drive is to be hand tool excavated only to the minimum required depth, removing the turf, with the new surface formed to a porous design. This is indicated on the TPP. The proposed bin store reutilises an existing area of surfacing and will not impact on tree RPAs.

10.3 The proposed drive leading to the new garage will overlap with tree RPAs and will need to be formed to a no dig (hand tool removal of turf/loose soil only) porous, cellular design prior to any machinery or vehicles accessing the site for the construction of the new garage. This approach will accord with Section 7.4 'Permanent hard surfacing within the RPA' of BS5837:2012 and the AA Guidance Note 12 'The use of cellular confinement systems near trees'. The cellular system should be a Geoweb or similar product, installed to a working surface for the garage construction on a rolling forward basis from the south working north.

10.4 Typically this would comprise a geotextile base with the cells pinned out and filled with no fines roadstone with a further geotextile layer over which a removal working surface is laid. Once the garage works are complete the working surface is removed, working from the north to the south, and the finished porous surface applied. The edges are typically retained with pinned sleepers or similar with topsoil graded down to the surrounding ground level. Specific details of the construction and materials can be supplied in relation to a specific precommencement condition once the principle of the design has been accepted for planning. This approach will avoid any adverse compaction of the root systems and the porous design will allow for continued moisture infiltration and gaseous exchange.

11. TREE PROTECTION MEASURES – FENCING

11.1 *Location of fencing*

11.1.1 The Tree Protection Plan indicates the proposed location of protective fencing based on the calculated tree protection areas and space available.

11.2 *Design of fencing*

11.2.1 Protective fencing to comprise weldmesh panels securely fixed together with scaffold ties set within rubber/plastic feet to form a continuous barrier. Feet to be pinned to the ground with road pins/short scaffold bars or panel joins back braced. Waterproof signs to be attached to every 5th panel declaring "TREE ROOT PROTECTION ZONE – KEEP OUT" or similar wording. Fencing to be constructed in accordance with Fig 3 of Section 6.2 of BS5837:2012.

11.2.2 Examples of the fencing specification and signage required are included in Appendix 5.

11.3 *Timing of fencing*

11.3.1 Protective fencing is to be erected prior to commencement of site works and remain in place until completion of construction. The location and suitability of the fencing can be confirmed to the local authority by an arboricultural consultant prior to commencement of construction. Any tree felling will need to be undertaken prior to fence installation to minimise risks to operatives. All tree surgeons' vehicles will be kept outside the indicated protection zones utilising existing areas of hard standing and drive.

11.4 ***Additional precautions***

11.4.1 Potentially injurious materials such as fuels, oils, chemicals and cement will be stored at least 20m from any stem, or in a bunded storage vessel. No fires will be lit within 5m of the drip line of any retained tree. No level changes will occur, either raising or lowering within the protected areas. A list of these additional precautions are included on the Tree Protection Plan.

12. GROUND PROTECTION MEASURES

12.1 In areas within root protection zones where access around the new building footprints and working areas will be required during construction, specific ground protection measures will be required. For machinery access these should comprise interlocking, specifically designed load bearing temporary roadway plates, commonly made of steel or specialised plastics and rated for the anticipated loads for the specific site activities. They will minimise any risk of compaction whilst providing a running platform for machinery.

12.2 Where foot access or scaffolding only is required the ground protection measures can comprise a geotextile layer with 100mm of woodchip over, topped with side butting scaffold boards or non slip surfaced minimum 12mm thick OSB/plywood boards.

12.3 The areas requiring ground protection measures are indicated on the TPP with cross hatching.

13. SITE OPERATIONS AND MATERIALS STORAGE

13.1 Details of site zoning cannot be specified by an Arboriculturalist as these are commonly determined by contractors on the basis of Health & Safety Assessments. However, the robust protective fencing will define the remaining site space available for storage and operations. Within this site the areas of existing drive and south of the proposed garage can be utilised as temporary storage areas.

14. SERVICES/DRAINAGE/SOAKAWAYS

14.1 Based on the supplied layout, any new services, drainage or soakaway alignments should be located outside root protection areas. If incursion into the protective areas of retained trees is unavoidable, then the routing should be obtained either by hand tool excavation or air spade, supervised by an arboricultural consultant. Any works within the protective areas will need to be undertaken to the requirements of NJUG Volume 4 “Guidelines for the Planning, Installation and Maintenance of Utility Apparatus in Proximity to Trees”.

15. ARBORICULTURAL METHOD STATEMENT

15.1 A separate Arboricultural Method Statement is not considered necessary for this site. Details of the protective fencing and ground protection specification, timing and location are indicated on the Tree Protection Plan, which can be referred to in a specifically worded condition.

16. SUMMARY

16.1 The proposals will require the removal of 9 individual trees, a compact non native evergreen screen and the eastern end of a roadside hedge. All but one of these are BS Category C with very limited public visibility and no adverse impact on the wider visible landscape context. New planting is proposed to off set the proposed losses, with the majority of the trees present retained.

16.2 The proposed garage and extensions/alterations to the existing house and garage will not adversely impact on retained tree RPAs.

16.3 The proposed drive leading to the proposed garage is to be installed to a no dig, porous, cellular design, in accordance with industry guidance and BS5837:2012 to avoid adverse impacts on retained tree root systems.

16.4 The Tree Protection Plan can be referred to as an approved drawing or in a specifically worded condition to ensure that the retained trees are appropriately protected during the demolition and construction works.

Tim Laddiman
Chartered Arboriculturist
Broad Oak Tree Consultants Ltd.

APPENDIX 1

TREE SURVEY EXPLANATORY SHEET

Height	in metres (estimated where ground uneven or access restricted).
Stem count	number of stems
Stem diameter	in mm. at 1.5m. above ground level.
Branch spread	radial spread in metres at four main compass points (estimated where no access).
Age class	Young - Y Semi Mature - SM Mature - M Over mature - OM Veteran - V
Height of crown clearance	in metres. Normally range of heights of outer branches above ground level, e.g. 2-4m.
Physiological condition	Good, Fair, Poor, Dead, Variable
Estimated remaining contribution	in years e.g. less than 10, 10-20, 20-40, 40+
Category grading	see attached sheet
Structural condition	comment on presence of defects, decay, crown form, past management**,** deadwood, other features worthy of note. N.B. If trees are ivy clad, no full structural assessment will have been possible.
Preliminary management recommendations	requirements of further investigations, works necessary to alleviate potential hazards based on current setting and levels of access. NB: Works that may be necessary in relation to development are not included here

CASCADE CHART FOR TREE QUALITY ASSESSMENT

TREES FOR REMOVAL				
Category and definition	Criteria			Identification on plan
Category U Those in such a condition that any existing value would be lost within 10 years and which should, in the current context, be removed for reasons of sound arboricultural management	• Trees that have a serious, irremediable, structural defect, such that their early loss is expected due to collapse, including those that will become unviable after removal of other R category trees (i.e. where, for whatever reason, the loss of companion shelter cannot be mitigated by pruning) • Trees that are dead or are showing signs of significant, immediate and irreversible overall decline. • Trees infected with pathogens of significance to the health and/or safety of other trees nearby (e.g. Dutch elm disease), or very low quality trees suppressing adjacent trees of better quality NOTE Habitat reinstatement may be appropriate (e.g. R category tree used as a bat roost: installation of bat box in nearby tree.)			DARK RED
TREES TO BE CONSIDERED FOR RETENTION				
Category and definition	Criteria - Subcategories			Identification on plan
	1. Mainly arboricultural values	2. Mainly landscape values	3. Mainly cultural values, including conservation	
Category A Those of high quality and value: in such a condition as to be able to make a substantial construction (a minimum of 40 years is suggested)	Trees that are particularly good examples of their species, especially if rare or unusual, or essential components of groups, or of formal or semi-formal arboricultural features (e.g. the dominant and/or principal trees within an avenue)	Trees, groups or woodlands which provide a definite screening or softening effect to the locality in relation to views into or out of the site, or those of particular visual importance (e.g. avenues or other arboricultural features assessed as groups)	Trees, groups or woodlands of significant conservation, historical, commemorative or other value (e.g. veteran trees or wood-pasture)	LIGHT GREEN
Category B Those of moderate quality and value: those in such a condition as to make a significant contribution (a minimum of 20 years is suggested)	Trees that might be included in the high category, but are downgraded because of impaired condition (e.g. presence of remediable defects including unsympathetic past management and minor storm damage)	Trees present in numbers, usually as groups or woodland, such that they form distinct landscape features, thereby attracting a higher collective rating than they might as individuals but which are not, individually, essential components of formal or semi-formal arboricultural features (e.g. trees of moderate quality within an avenue that includes better, A category specimens), or trees situated mainly internally to the site, therefore individually having little visual impact on the wider locality	Trees with clearly identifiable conservation or other cultural benefits	MID BLUE
Category C Those of low quality and value: currently in adequate condition to remain until new planting could be established (a minimum of 10 years is suggested), or young trees with a stem diameter below 150mm.	Trees not qualifying in higher categories	Trees present in groups or woodland, but without this conferring on them significantly greater landscape value, and/or trees offering low or only temporary screening benefit.	Trees with very limited conservation or other cultural benefits	GREY
	NOTE Whilst C category trees will usually not be retained where they would impose a significant constraint on development, young trees with a stem diameter of less than 150mm should be considered for relocation			

Tree ref. no.	Species	Height (m.)	Stem Count	Stem diameter or equivalent (mm.)	Stem diameter or equivalent (mm.)	Branch spread (m.)				Age class	Ht. of crown clearance (m.)	Physiological condition	Estimated remaining contribution (years)	Category grading	Structural condition and Notes	Preliminary management recommendations
						N	E	S	W							
T1	Common Oak	21	1	750	750	7.5	7	8	7	M	6+	Good	40+	A2	Crown raised in past	
T2	Common Oak	22	1	900	900	6	5	9	7	M	5+	Good	20-40	B2	Crowded. Past lower limb removal. Past tear out in central stem at 6m. Deadwood	
T3	Common Oak	21	1/Multi	1050	1050	5.5	12	9.5	7	M	5+	Good	40+	A2	Multi-stemmed <7m. Crown raised in past. Minor deadwood	
G4	Beech, Rhododendron, Holly	<6	2	200	<200	<2	<1.5	<1.5	<1.5	M	0+	Good	40+	C2	Partially maintained hedge	
T5	Cypress	6	1	200	200	2	2	1	1.5	Y	0.5+	Good	40+	C2	Twin stemmed c50cm	
G6	Western Red Cedar	<2.2	2	130	<130	<1	<1	<1	<1	Y	0+	Good	40+	C2	Trimmed hedges	
T7	Rowan	5.5	2	140	140	2.5	1	1.5	2.5	Y	1+	Good	40+	C2	Twin stemmed <1m. Slight lean to W	
T8	Cabbage Palm	4	1	240	240	1	1.5	1.5	1.5	Y	0+	Good	20-40	C2	Twin stemmed from ground level	
T9	Magnolia	3.5	1	120	120	2	3	2	2	Y	2+	Good	40+	C2		
T10	Oak	3.5	1	130	130	3	3.5	2.5	2	Y	1.8+	Good	40+	C2		
T11	Judas Tree	6	1	150	150	2	2.5	2.5	2	Y	1+	Good	40+	C2		
T12	Bird Cherry	6	2	180	180	3	2.5	3.5	2	SM	1.4+	Poor	10-20	C1	Twin stemmed <1m. Fine dieback	
G13	2no Common Oak	<19	1	630	<630	9	6.5	10.5	6.5	M	1.7+	Good	40+	B2	Southern tree suppressed and curved to S	
T14	Silver Birch	14	1	330	330	3.5	2	3.5	3.5	M	1+	Fair	10-20	C1	Three stems <3m. Slight crown thinning	

Tree ref. no.	Species	Height (m.)	Stem Count	Stem diameter or equivalent (mm.)	Stem diameter or equivalent (mm.)	Branch spread (m.)				Age class	Ht. of crown clearance (m.)	Physiological condition	Estimated remaining contribution (years)	Category grading	Structural condition and Notes	Preliminary management recommendations
						N	E	S	W							
T15	Silver Birch	20	1	640	640	3.5	9	8	5	M	6+	Fair	10-20	C1	Stem lean to E. Past crown raising. Minor thinning and deadwood	
T16	Beech	14	1	450	450	5	7	7.5	4.5	SM	1+	Poor	10-20	C1	Extensive squirrel damage	
T17	Silver Birch	16	1	440	440	2.5	6.5	6	0.5	M	8+	Poor	10-20	C1	Crowded. Lean to E. Fine dieback and deadwood	
T18	Beech	14	1	330	330	4.5	6	5.5	4	SM	0.8+	Poor	10-20	C1	Becoming crowded. Three stems from 1.7m. Extensive squirrel damage	
T19	Common Oak	20	1	510	510	5	6	2	7	M	1+	Good	40+	B2	Crowded. Twin stemmed <3m	
G20	Common Oak	<22	1	400	<400	<4	<4	<5	<6	SM	0.6+	Variable	20-40	B2	Crowded. Drawn up	
T21	Common Oak	21	1	540	540	7	6.5	6	6.5	M	1+	Good	40+	B2	Crowded. High main crown. Minor deadwood	
T22	Common Oak	18	1	460	460	4.5	6	6	5	M	1+	Good	40+	B2	Crowded. High main crown. Minor deadwood	
T23	Common Oak	21	1	370	370	4	2.5	4	6	M	1+	Good	40+	C2	Crowded	
T24	Common Oak	23	1	530	530	4	8	6	4	M	4+	Good	40+	B2	Crowded. Twin stemmed <5m. Crown raised. Minor deadwood	
T25	Common Oak	21	1	520	520	3.5	4	4	5	M	1+	Good	40+	B2	Twin stemmed at c3m. Minor deadwood	
T26	Common Oak	19	1	520	520	4.5	8.5	5	6	M	5+	Fair	20-40	B2	Crowded. Crown raised. Ascending long limbs. Slight crown thinning	
T27	Common Oak	18	1	470	470	1.5	1.5	10	7.5	M	3+	Fair	40+	C2	Crowded. Lean to S. Twin stemmed <3m	
T28	Common Oak	21	1	460	460	7	4.5	3	2	M	3+	Fair	20-40	C1	Twin stemmed at 1.8m. Crowded. Crown thinning	

Tree ref. no.	Species	Height (m.)	Stem Count	Stem diameter or equivalent (mm.)	Stem diameter or equivalent (mm.)	Branch spread (m.)				Age class	Ht. of crown clearance (m.)	Physiological condition	Estimated remaining contribution (years)	Category grading	Structural condition and Notes	Preliminary management recommendations
						N	E	S	W							
T29	Common Oak	20	1	440	440	1.5	5.5	4	2.5	M	4+	Fair	40+	B2	Crowded. Crown raised. Deadwood. Twin stemmed at c3m	
T30	Common Oak	21	1	470	470	1.5	4.5	6	4.5	M	10+	Fair	40+	B2	Twin stemmed <3m. Crown raised. Previously crowded	
T31	Common Oak	25	1	610	610	5.5	6	9	5.5	M	10+	Good	40+	A2	Twin stemmed at 7-8m. Crown raised. Minor deadwood. Decayed wound at 3m to N	
T32	Common Oak	20	1	690	690	3	8.5	12	10	M	6+	Good	40+	B2	Crown raised. Multi-stemmed c3m. Ascending long limbs	
T33	Common Oak	18	1	600	600	4	5	9.5	11	M	3+	Fair	20-40	B2	Crowded. Multi-stemmed <3m	
T34	Common Oak	19	1	570	570	4	9	5	5.5	M	6+	Fair	40+	B2	Multi-stemmed <3.5m. Crown raised. Crowded	
T35	Common Oak	23	1	790	790	7.5	9.5	5	6	M	6+	Good	40+	B2	Crown raised. Crowded. Twin stemmed at c6m. Minor deadwood	
T36	Common Oak	19	1	550	550	3	7	7	7	M	8+	Good	40+	B2	Crowded. Twin stemmed at 2m. Crown raised. Minor deadwood	
T37	Common Oak	20	3	640	640	5	3.5	5	3	M	3+	Good	40+	B2	Three stems <1m. Crowded. Crown raised	
T38	Hawthorn	9	4	240	240	4	3	4	4	M	1+	Fair	20-40	C2	Multi-stemmed near ground level. Overtopped	
T39	Common Oak	23	1	520	520	7	6	4	6	M	9+	Good	40+	A2	Crown raised. Twin stemmed at c7m	
T40	Common Oak	23	1	620	620	10	7.5	4	7	M	3+	Good	40+	B2	Three stems <3m. Crowded	
T41	Common Oak	20	2	520	520	2.5	1.5	4.5	4	M	3+	Good	40+	B2	Twin stemmed at 1m. Crowded. Crown raised	
T42	Common Oak	21	1	520	520	4	3	5	5	M	1.2+	Good	40+	B2	Crowded. Three stems <6m	

Tree ref. no.	Species	Height (m.)	Stem Count	Stem diameter or equivalent (mm.)	Stem diameter or equivalent (mm.)	Branch spread (m.)				Age class	Ht. of crown clearance (m.)	Physiological condition	Estimated remaining contribution (years)	Category grading	Structural condition and Notes	Preliminary management recommendations
						N	E	S	W							
T43	Common Oak	22	1	500	500	6.5	2.5	5.5	4	M	1.3+	Fair	20-40	B2	Crowded. Minor thinning and deadwood	
T44	Common Oak	17	1	360	360	4	0.5	6.5	4	SM	1+	Fair	20-40	C2	Crowded	
T45	Cypress	4	Multi	100	100	1.5	0.5	1.5	1.5	Y	0.5+	Fair	20-40	C2	Multi-stemmed near ground level. Crowded	
T46	Holly	7	3	170	170	3	2.5	2	4	SM	0+	Fair	20-40	C2	Three stems near ground level. Crowded. Topped <3.5m in past. Overtopped	
T47	Beech	9	1	200	200	5	1	2.5	5.5	Y	1+	Fair	20-40	C2	Crowded. Part overtopped	
T48	Common Oak	22	1	850	c850	6	6	4	4	M	4+	Fair	40+	B2	Multi-stemmed <5m	
T49	2no Oak, 1no Beech	<24	1	330	<330	<4	<5	<4	<4	SM	1.3+	Good	40+	C2	Crowded	
T50	Common Oak	19	1	250	250	2.5	1	3	4	SM	2+	Fair	40+	C2	Crowded	
T51	Common Oak	20	1	410	410	4	4.5	4	3	M	3+	Fair	40+	B2	Crowded. Twin stemmed at 3.5m. Crown raised	
T52	Common Oak	21	1	490	490	4	4	5	6	M	3+	Fair	40+	B2	Previously crowded. High main crown	
G53	Common Oak	22	1	480	480	4	4.5	3	4.5	M	12+	Good	40+	B2	Crown raised. Crowded. Twin stemmed <4m	
T54	Common Oak	18	1	310	310	4	2	2	2.5	SM	3+	Fair	10-20	C1	Crowded. Stem kinked to E at 3m. Past crown raising. Thin crown	
T55	Common Oak	20	1	330	330	3	2.5	1.5	2	SM	3+	Good	40+	C2	Crowded. Drawn up. Previously crown raised	
T56	Common Oak	20	1	360	360	4	3.5	1.5	1	SM	5+	Fair	40+	C2	Crowded. Drawn up. Past crown raising. Kinked stem at 4-6m	
T57	Common Oak	23	1	490	490	6.5	3.5	4	3	M	12+	Good	40+	B2	Twin stemmed c4m. Crown raised. Crowded	

Tree ref. no.	Species	Height (m.)	Stem Count	Stem diameter or equivalent (mm.)	Stem diameter or equivalent (mm.)	Branch spread (m.)				Age class	Ht. of crown clearance (m.)	Physiological condition	Estimated remaining contribution (years)	Category grading	Structural condition and Notes	Preliminary management recommendations
						N	E	S	W							
T58	Common Oak	18	1	470	470	6	4	2.5	1.5	M	9+	Fair	20-40	C2	Crowded. Leaning NE. Crown raised	
T59	Common Oak	23	1	540	540	4	6	2.5	5	M	12+	Good	40+	B2	Crowded. Crown raised	
T60	Common Oak	14	1	330	330	2	7	3	2	SM	4+	Fair	40+	C2	Crowded. Part overtopped. Crown raised	
T61	Common Oak	23	1	320	320	2	4	1	2	SM	14+	Fair	40+	C2	Crowded. Slender drawn up stem. High crown	
T62	Common Oak	23	1	450	c450	1.5	1.5	7	3	M	14+	Unconfirmed	40+	B2	Ivy clad. Crowded. High crown	
T63	Common Oak	23	2	530	530	5	7	6	2	M	9+	Fair	40+	B2	Crowded. Twin stemmed <1m, four stems <4m. Minor deadwood	
T64	Common Oak	22	1	340	340	2	3	4	4	M	10+	Fair	40+	B2	Crowded. Crown raised. High crown	
T65	Common Oak	23	1	380	380	2	2.5	3.5	3	M	14+	Good	40+	B2	Crowded. Crown raised. High crown	
T66	Common Oak	22	1	390	390	2	3.5	2	2	M	8+	Fair	40+	C2	Twin stemmed at 4-5m. Crowded crown	
T67	Common Oak	24	1	580	590	6	4.5	3	4	M	14+	Good	40+	B2	Crown raised. Deadwood. Crowded	
T68	Common Oak	18	1	430	430	3.5	4	2	3.5	M	2.3+	Fair	20-40	C2	Crowded. Crown raised. Sinuous stem. Minor deadwood	
T69	Common Oak	20	1	550	550	6.5	5.5	4	6.5	M	4+	Fair	40+	B2	Crowded. Multi-stemmed <4m. Ascending limbs. Minor deadwood	
T70	Common Oak	21	1	350	350	1.5	4	4	4	M	12+	Fair	40+	B2	Crown raised. High crown	

APPENDIX 2

Broad Oak Tree Consultants Ltd
Laurel House
Burwash Road
Broad Oak
Heathfield
East Sussex
TN21 8SS

Tel: 01435 862444
Email: office@broadoaktrees.co.uk

WOODCUTTERS
FOREST ROAD
COLGATE
HORSHAM

TREE CONSTRAINTS PLAN

T1 - T70 Tree numbers

BS Category of Condition

- T1 — BS Condition A
- T2 — BS Condition B
- T5 — BS Condition C
- 0 — BS Condition U

Crown spread

BS Calculated root protection areas

The root protection areas have been calculated using the measured stem diameters and the formula as described in Section 4.6 in BS5837:2012. These are represented as basic circles on the Tree Constraints Plan. Where buildings, walls, services and hard surfacing exist within the indicated RPAs, it is likely that the architecture of root systems will have been affected. Foundations to walls and buildings can completely obstruct root development, depending on their depth and the nature of the underlying soils. In the absence of detailed site investigations, the indicated RPA circles should be used for guidance only within any redevelopment proposals.

0 1 2 3 4 5 10
Scale (m)

DRAWING NO. J67.25/01

Scale: 1:200 at A1

Added to by: NL

28/08/2025

APPENDIX 3

TABLE OF BS CALCULATED ROOT PROTECTION AREAS (RPAs)
WOODCUTTERS, FOREST ROAD, COLGATE, HORSHAM

Tree no.	Species	BS Category	Stem diameter or calculated equivalent (mm.)	BS calc. radial equiv. root protection area (m.)	BS calc. total RPA (m²)
T1	Common Oak	A2	750	9	255
T2	Common Oak	B2	900	10.8	366
T3	Common Oak	A2	1050	12.6	499
G4	Beech, Rhododendron, Holly	C2	<200	<2.4	<18
T5	Cypress	C2	200	2.4	18
G6	Western Red Cedar	C2	<130	<1.6	<8
T7	Rowan	C2	140	1.7	9
T8	Cabbage Palm	C2	240	2.9	26
T9	Magnolia	C2	120	1.4	6
T10	Oak	C2	130	1.6	8
T11	Judas Tree	C2	150	1.8	10
T12	Bird Cherry	C1	180	2.2	15
G13	2no Common Oak	B2	<630	<7.6	<181
T14	Silver Birch	C1	330	4	50
T15	Silver Birch	C1	640	7.7	186
T16	Beech	C1	450	5.4	92
T17	Silver Birch	C1	440	5.3	88
T18	Beech	C1	330	4	50
T19	Common Oak	B2	510	6.1	117
G20	Common Oak	B2	<400	<4.8	<72
T21	Common Oak	B2	540	6.5	133
T22	Common Oak	B2	460	5.5	95
T23	Common Oak	C2	370	4.4	61
T24	Common Oak	B2	530	6.4	129
T25	Common Oak	B2	520	6.2	121
T26	Common Oak	B2	520	6.2	121
T27	Common Oak	C2	470	5.6	99
T28	Common Oak	C1	460	5.5	95
T29	Common Oak	B2	440	5.3	88
T30	Common Oak	B2	470	5.6	99
T31	Common Oak	A2	610	7.3	167
T32	Common Oak	B2	690	8.3	216
T33	Common Oak	B2	600	7.2	163
T34	Common Oak	B2	570	6.8	145
T35	Common Oak	B2	790	9.5	284
T36	Common Oak	B2	550	6.6	137
T37	Common Oak	B2	640	7.7	186
T38	Hawthorn	C2	240	2.9	26
T39	Common Oak	A2	520	6.2	121
T40	Common Oak	B2	620	7.4	172
T41	Common Oak	B2	520	6.2	121
T42	Common Oak	B2	520	6.2	121
T43	Common Oak	B2	500	6	113
T44	Common Oak	C2	360	4.3	58
T45	Cypress	C2	100	1.2	5

TABLE OF BS CALCULATED ROOT PROTECTION AREAS (RPAs)
WOODCUTTERS, FOREST ROAD, COLGATE, HORSHAM

T46	Holly	C2	170	2	13
T47	Beech	C2	200	2.4	18
T48	Common Oak	B2	c850	c10.2	c327
T49	2no Oak, 1no Beech	C2	<330	<4	<50
T50	Common Oak	C2	250	3	28
T51	Common Oak	B2	410	4.9	75
T52	Common Oak	B2	490	5.9	109
G53	Common Oak	B2	480	5.8	106
T54	Common Oak	C1	310	3.7	43
T55	Common Oak	C2	330	4	50
T56	Common Oak	C2	360	4.3	58
T57	Common Oak	B2	490	5.9	109
T58	Common Oak	C2	470	5.6	99
T59	Common Oak	B2	540	6.5	133
T60	Common Oak	C2	330	4	50
T61	Common Oak	C2	320	3.8	45
T62	Common Oak	B2	c450	c5.4	c92
T63	Common Oak	B2	530	6.4	129
T64	Common Oak	B2	340	4.1	53
T65	Common Oak	B2	380	4.6	66
T66	Common Oak	C2	390	4.7	69
T67	Common Oak	B2	590	7	154
T68	Common Oak	C2	430	5.2	85
T69	Common Oak	B2	550	6.6	137
T70	Common Oak	B2	350	4.2	55

APPENDIX 4

Broad Oak Tree Consultants Ltd
Laurel House
Burwash Road
Broad Oak
Heathfield
East Sussex
TN21 8SS

Tel: 01435 862444
Email: office@broadoaktrees.co.uk

WOODCUTTERS
FOREST ROAD
COLGATE
HORSHAM

TREE PROTECTION PLAN

T1 - T70 Tree numbers

BS Category of Condition

T1 BS Condition A

T2 BS Condition B

T5 BS Condition C

0 BS Condition U

Crown spread

BS Calculated root protection areas

Tree to be removed for safety/short lifespan

Tree to be removed for development

Protective fencing location

Ground protection

TREE PROTECTION INFORMATION

Protective fencing and ground protection measures to be installed at locations specified prior to commencement of any demolition works.

Protective fencing to comprise weldmesh panels securely fixed together with scaffold ties set within rubber/plastic feet to form a continuous barrier. Feet to be pinned to the ground with road pins/short scaffold bars or panel joins back braced. Waterproof signs to be attached to every 5th panel declaring "TREE ROOT PROTECTION ZONE - KEEP OUT" or similar wording. Fencing to be constructed in accordance with fig. 2 or fig. 3 of section 6.2 of BS5837:2012.

Ground protection measures to comprise a single thickness of side butting scaffold boards over a 100mm. compressible layer laid onto a geotextile. For machinery access, interlocking metal/plastic road plates will need to be used.

Buildings in proximity to protective fencing areas to be demolished by machinery pulling walls inwards onto the building footprint.

The fenced protection zones around retained trees, hedges and shrubbery are to be regarded as sacrosanct and none of the following are to occur within these areas:

- Storage or disposal of any soil, building materials, machinery, fuel or waste residues of any description.

- Siting of any temporary structures of any description including site office/sales buildings, temporary car parking facilities, porta-loos, storage compounds or temporary hard standing areas.

- Excavations, soil/turf stripping, raising/lowering of existing levels or alterations to the existing natural surfaces/ground conditions of any other description.

- Location of temporary drainage, water supplies or any other temporary underground services.

- No use, movement or parking of any machinery or vehicles of any description.

- Additionally, no fires shall be lit within 20m. of the trunks of any trees or the centre line of any hedgerow to be retained.

All services to be installed to the requirements of NJUG Volume 4 "Guidelines for the Planning, Installation and Maintenance of Utility Apparatus in Proximity to Trees". Any runs within retained tree root protection areas to either be bored/moled or any hand excavation to be supervised by the Arboricultural Consultant

NO CONTRACTOR ACCESS

NO CONTRACTOR ACCESS

NO CONTRACTOR ACCESS

MATERIALS STORAGE AREA AND SOAKAWAY

Hand tool excavation to minimum depth

New planting proposed by others

Existing surfacing

Existing drive

Existing building footprint, therefore no impact

Bin store set on existing surfacing, therefore no impact

Ground protection to remain in place until drive ready to be installed. Hand tool removal of turf only with porous drive construction. No machinery to pass over area until surfacing installed

Hand tool removal of turf/loose material only. No dig, porous cellular drive to be installed to a working surface PRIOR to any machinery/vehicle access for garage construction. Drive to be laid on a rolling forward basis from S working N

T1 Common Oak A2
T2 Common Oak B2
T3 Common Oak A2
G4 Beech, Rhododendron, Holly C2
T5 Cypress C2
T6 Common Oak B2
T7 Rowan C2
T8 Cabbage Palm C2
T9 Magnolia C2
T10 Oak C2
T11 Judas Tree C2
T12 Bird Cherry C1
T13 Common Oak B2
T14 Silver Birch C1
T15 Silver Birch C1
T16 Beech C1
T17 Silver Birch C1
T18 Beech C1
T19 Common Oak B2
T20 Common Oak B2
T21 Common Oak B2
T22 Common Oak B2
T23 Common Oak C2
T24 Common Oak B2
T25 Common Oak B2
T26 Common Oak B2
T27 Common Oak C2
T28 Common Oak C1
T29 Common Oak B2
T30 Common Oak B2
T31 Common Oak A2
T32 Common Oak B2
T33 Common Oak B2
T34 Common Oak B2
T35 Common Oak B2
T36 Common Oak B2
T37 Common Oak B2
T38 Hawthorn C2
T39 Common Oak A2
T40 Common Oak B2
T41 Common Oak B2
T42 Common Oak B2
T43 Common Oak B2
T44 Common Oak C2
T45 Cypress C2
T46 Holly C2
T47 Beech C2
T48 Common Oak B2
T49 2no Oak, 1no Beech C2
T50 Common Oak C2
T51 Common Oak B2
T52 Common Oak B2
T53 Common Oak B2
T54 Common Oak C1
T55 Common Oak C2
T56 Common Oak C2
T57 Common Oak B2
T58 Common Oak C2
T59 Common Oak B2
T60 Common Oak C2
T61 Common Oak C2
T62 Common Oak B2
T63 Common Oak B2
T64 Common Oak B2
T65 Common Oak B2
T66 Common Oak C2
T67 Common Oak B2
T68 Common Oak C2
T69 Common Oak B2
T70 Common Oak B2
G13 2no Common Oak B2
G20 Common Oak B2

0 1 2 3 4 5 10
Scale (m)

DRAWING NO. J67.25/02

Scale: 1:200 at A1

Added to by: NL

17/09/2025

APPENDIX 5

BS5837:2012: FENCING SPECIFICATIONS

Figure 2 **Default specification for protective barrier**

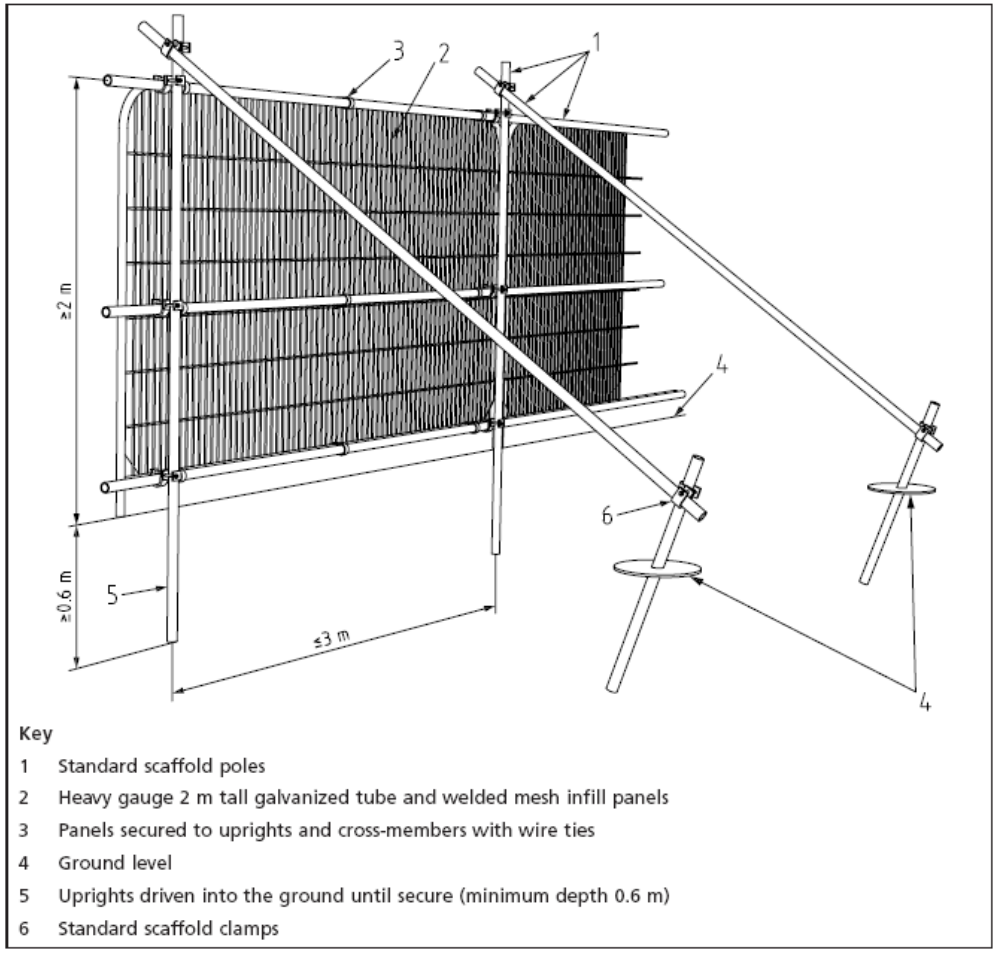

Key

1 Standard scaffold poles
2 Heavy gauge 2 m tall galvanized tube and welded mesh infill panels
3 Panels secured to uprights and cross-members with wire ties
4 Ground level
5 Uprights driven into the ground until secure (minimum depth 0.6 m)
6 Standard scaffold clamps

Figure 3 **Examples of above-ground stabilizing systems**

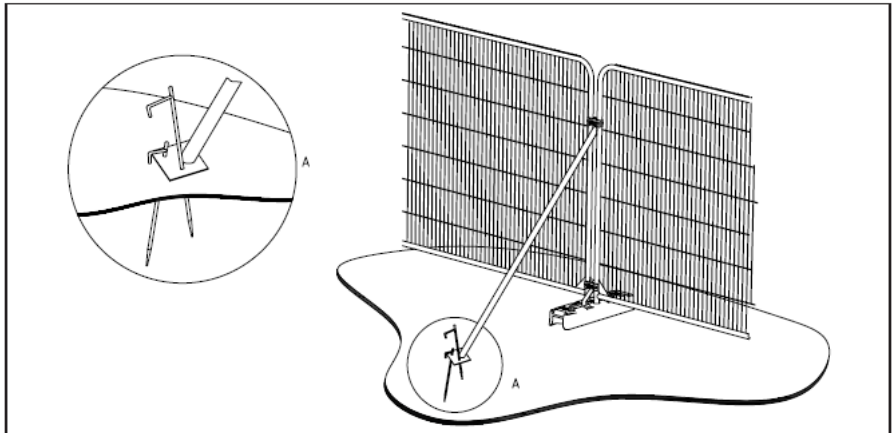

a) Stabilizer strut with base plate secured with ground pins

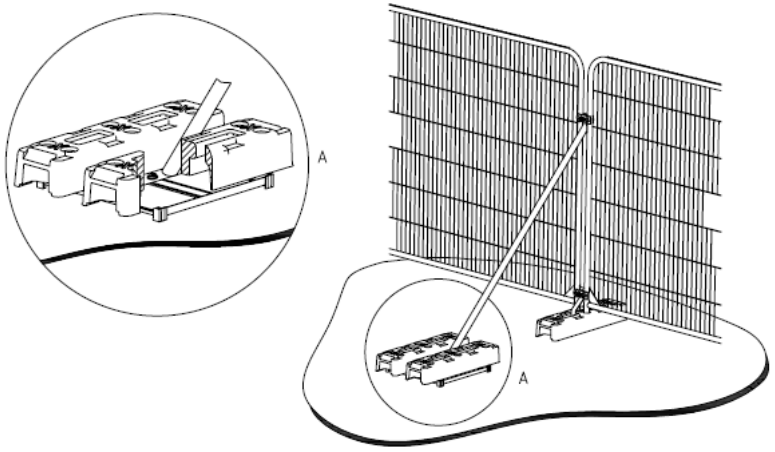

b) Stabilizer strut mounted on block tray





PROTECTIVE FENCING.
THIS FENCING MUST BE MAINTAINED IN ACCORDANCE WITH THE APPROVED PLANS AND DRAWINGS FOR THIS DEVELOPMENT

TREE PROTECTION AREA
KEEP OUT!
(TOWN & COUNTRY PLANNING ACT 1990)
TREES ENCLOSED BY THIS FENCE ARE PROTECTED BY PLANNING CONDITIONS AND/OR ARE SUBJECTS OF A TREE PRESERVATION ORDER.
CONTRAVENTION OF A TREE PRESERVATION ORDER MAY LEAD TO CRIMINAL PROSECUTION

ANY INCURSION INTO THE PROTECTED AREA MUST BE WITH THE WRITTEN PERMISSION OF THE LOCAL PLANNING AUTHORITY