01 A FENCE-1.8m ht. CLOSEBOARD FENCE
REAR ELEVATION 1:20

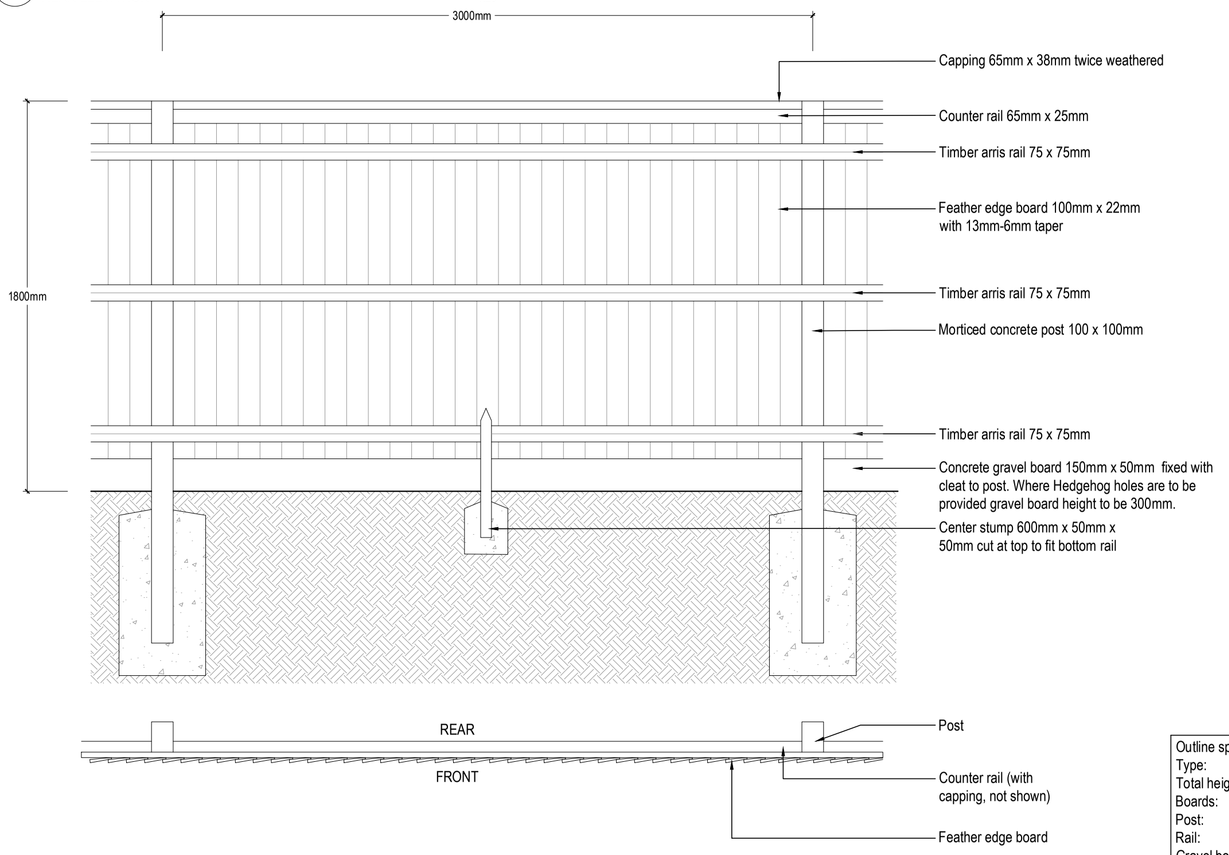

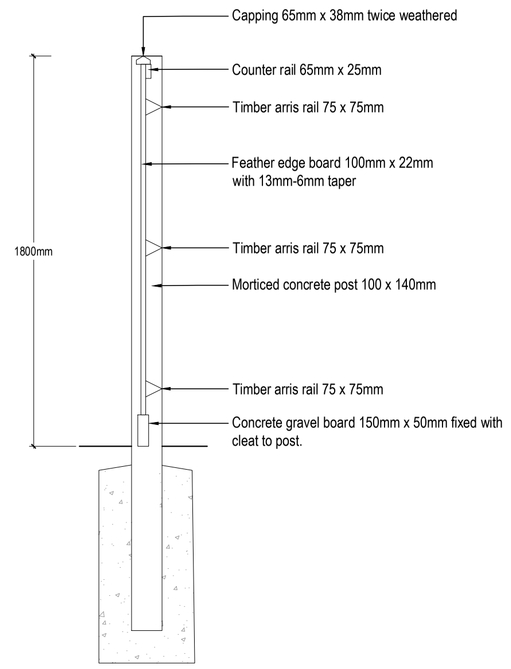

Outline specification:

Type:	Close board fence
Total height:	1.8m
Boards:	Timber feather edge
Post:	Concrete; Morticed post
Rail:	Timber; Arris rail
Gravel board:	Concrete with hedgehog hole. Gravel board height to be 300mm ht to accommodate hole.
Compliance:	To BS 1722-5
Type:	BCR (Recessed)
Accessories:	Hedgehog hole to be provided.

01 B 1.8m HIGH TIMBER CLOSE BOARD GATE
TYPICAL SECTION 1:20

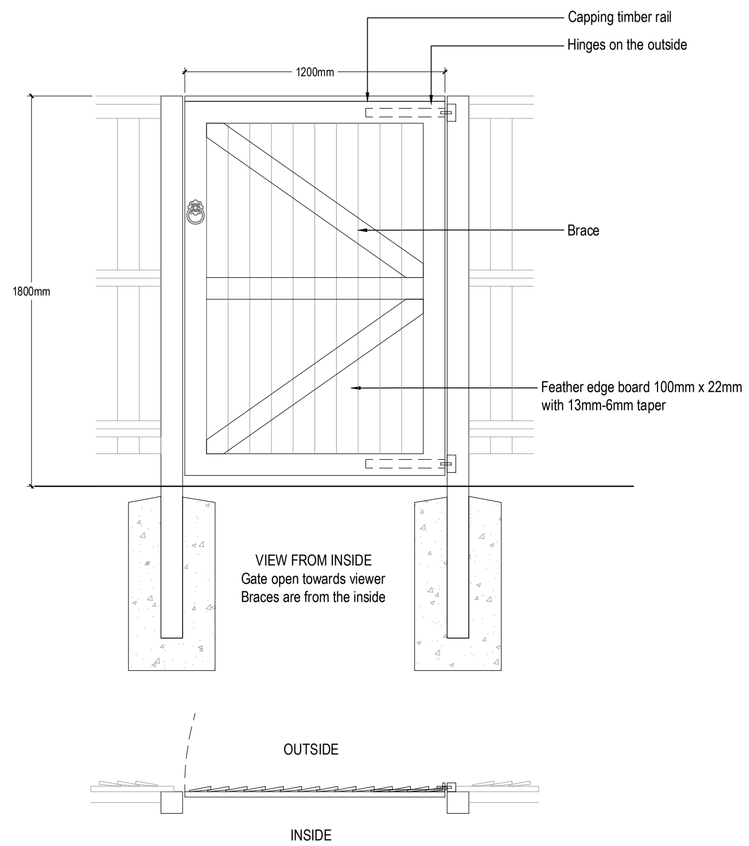

02 A 0.9M HT. TIMBER PICKET FENCE
ELEVATION 1:20

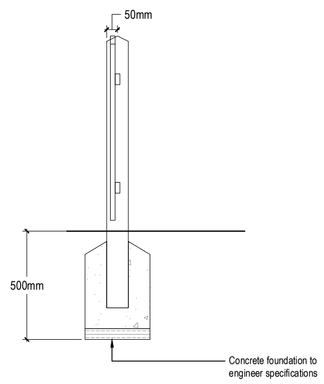

Front view: rails fixed to front side of posts

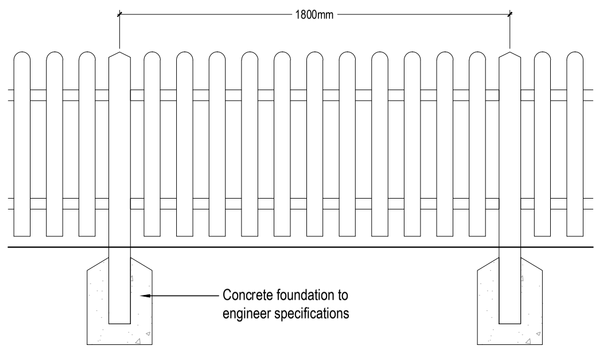

Top view: rails fixed to front side of posts

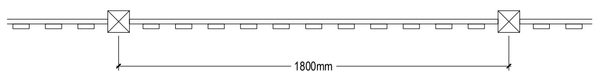

Outline specification:

Manufacturer:	Jackson's or similar equivalent
Type:	Timber picket (palisade) fence
Total height:	900mm
Post:	Timber; 100x100mm section, Sawn finish, weathered top
Pale:	Timber; 22x75mm; Sawn finish, round top
Nail:	Galvanized steel nails
Setting out:	Allow one post for every 1.8m of fence, plus one for the end of the run.
Fixing:	Root fixed into GEN 1 concrete footing
Compliance:	To BS 1722 - 5:2006

02 B 0.9M HT. TIMBER PICKET GATE
ELEVATION 1:20

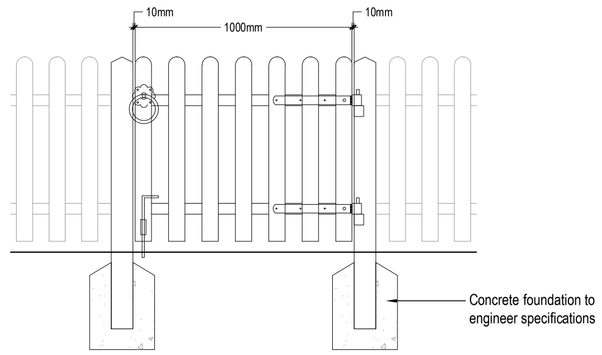

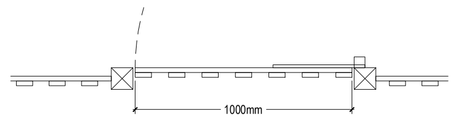

Outline specification:

Manufacturer:	Jackson's or similar equivalent
Type:	Wooden Playground fencing
Total height:	0.9m
Post/rail:	Timber; Anti-trap pale spacing, smooth planed and rounded edges.
Treatment:	All timber to be planed and sanded to avoid splinters
Compliance:	To BS 1722 - 5 & BS 1176; RoSPA approved
Accessories:	Single / double gate to match fence treatment.

03 1.0M HT. TIMBER POST AND RAIL FENCE
ELEVATION 1:20

SECTION

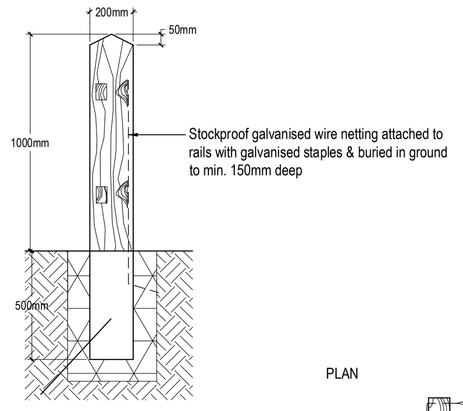

ELEVATION

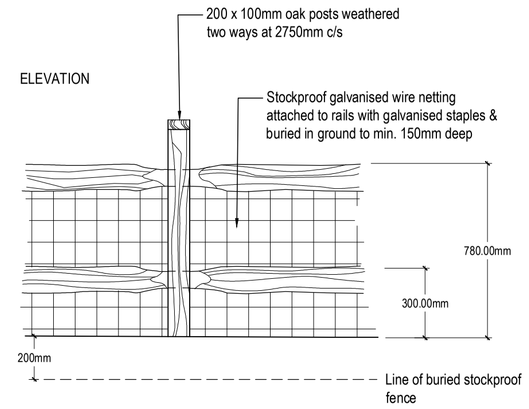

PLAN

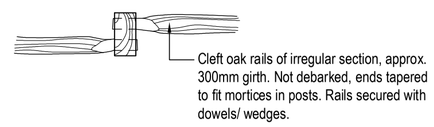

0m 1m

- All dimensions in millimetres unless otherwise indicated. All levels in metres relative to Ordnance Datum and are positive (AOD) unless otherwise indicated.
- Figure dimensions only to be taken from this drawing. Dimensions and levels to be checked on site.
- Do not re-scale this drawing.
- For civil and structural matters including existing and proposed services, sub-base construction and site structures (including retaining walls over 900mm height) refer to information by others.
- The original version of this drawing was produced in colour - monochrome copies should not be relied upon to accurately reflect all drawing elements.
- This drawing has been prepared for planning purposes only and should not be used for quantification, tender or construction.

rev.	date	by	chk	notes
P01	30.04.25	EF/NC	LF	First issue

project Tilletts Lane, Warnham

title Hard Landscape Detail Plan 2 of 3

status Stage 3 **scale @ A1** 1:20

dwg no **2516-TF-XX-00-DR-L-4005**

references

terrafirma LANDSCAPE ARCHITECTS
Suite B, Ideal House, Bedford Road, Petersfield, Hampshire GU32 3QA Tel: +44 (0)1730 262 060 Web: www.terrafirmaconsultancy.com
© Copyright reserved 2025