CDM 2015 Health & Safety Information

This information relates only to 'Significant Hazards' identified on this drawing and is to be read in conjunction with the Designer's Hazard Register.

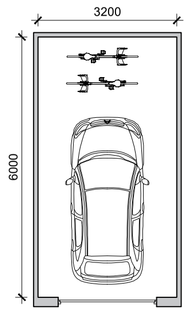

Single Garage
plot 10,13,16

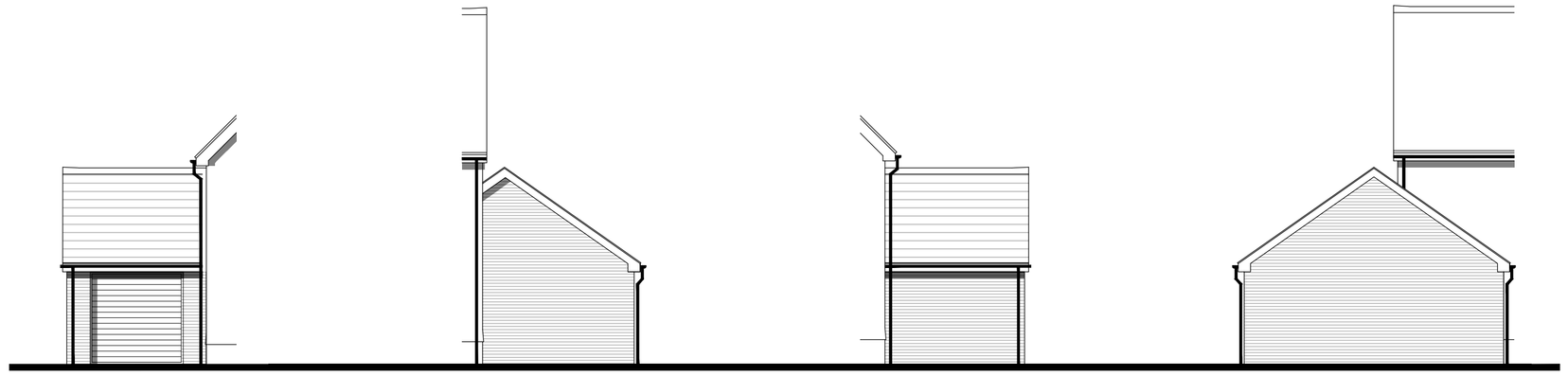

Front Elevation
plot 10,13,16

Side Elevation

Rear Elevation

Side Elevation

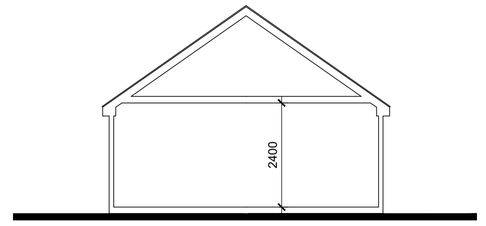

section

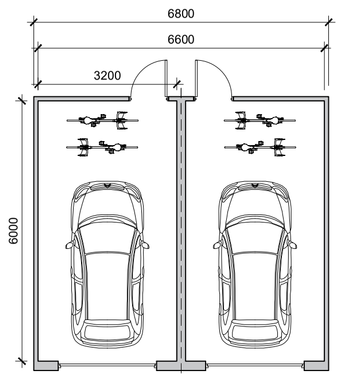

Double Garage
plot 28-27
handed 30-29

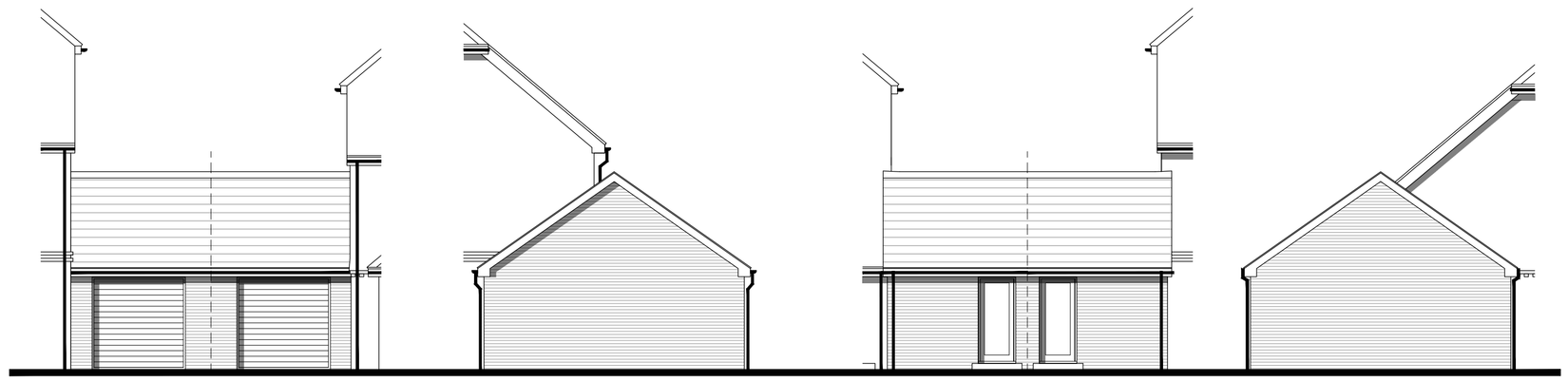

Front Elevation
plot 28-27
handed 30-29

Side Elevation

Rear Elevation

Side Elevation

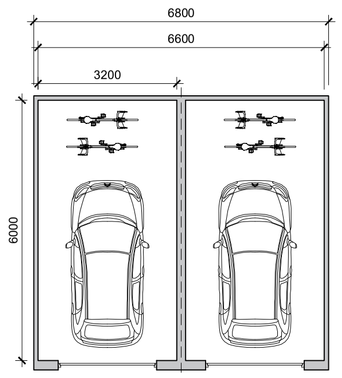

Detached Double Garage
plot 33-34

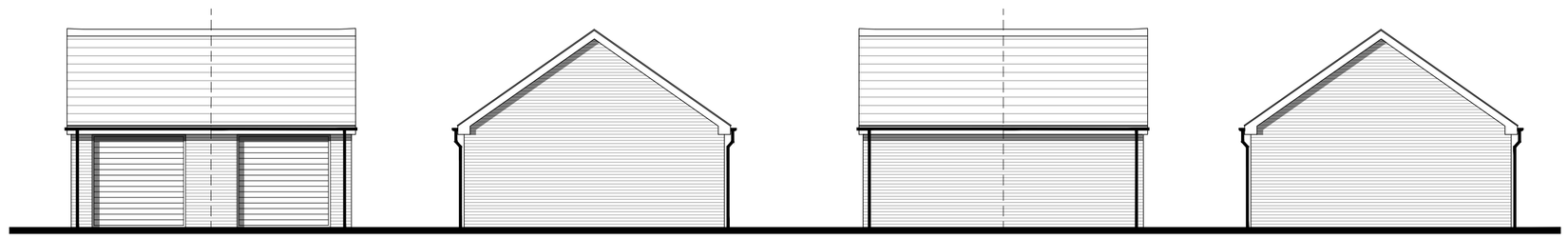

Front Elevation
plot 33-34

Side Elevation

Rear Elevation

Side Elevation

Rev	Date	Revision Details	Dr	Ch

London: 76 Great Suffolk Street
London, SE1 0BL
T 0207 928 2773 E london@ecearchitecture.com
Sussex: 64 - 68 Brighton Road, Worthing
West Sussex, BN11 2EN
T 01903 248777 E sussex@ecearchitecture.com
Bristol: Westworks, Beacon Tower
Colston Street, Bristol, BS1 4XE
T 0117 214 1101 E bristol@ecewestworks.com

ECE Architecture
www.ecearchitecture.com

Client's Name
Rocco Homes

Job Title
Land East of Penn Gardens,
Ashington, West Sussex

Drawing Title
Garages

Scale
1:100 @ A1 / 1:200 @ A3

metres 2 4 6 8 10

Drawn	Checked	Date
CV	KE	07.08.25

Job No	Drawing No	Rev
7578	PL-32	

Status
APPROVAL

CAD Plot date: 7/08/2025 - 15:19:02 7578 - mast.dwg

© ECE Architecture Limited. No dimensions to be scaled from drawing except for the purposes of Planning Applications. The contractor should check all dimensions on site. It is the contractors responsibility to ensure compliance with Building Regulations.