aspect arboriculture

NEW PLACE FARM

PULBOROUGH

Arboricultural Impact Assessment & Method Statement

December 2025
12072_AIA.001 Rev B

COPYRIGHT

The copyright of this document remains with Aspect Arboriculture Ltd. The contents of this Document therefore must not be copied or reproduced in whole or in part for any purpose without the written consent of Aspect Arboriculture Ltd.

Aspect Arboriculture
Hardwick Business Park
Noral Way
Banbury
Oxfordshire
OX16 2AF

t 01295 276066
f 01295 265072

e info@aspect-arbor.com
w www.aspect-arbor.com

CONTENTS

1. Introduction 1
1.1 Background 1
1.2 Scope 2
1.3 Limitations 2

2 Arboricultural Impact Assessment 3
2.1 Existing Tree Cover 3
2.2 Tree Removals 4
2.3 Pruning Works 4

3. Method Statement 5
3.1 Tree Protection Plan 5
3.2 Protective Barriers 5
3.3 Supervised Excavation 7
3.4 Above Soil Hard Surfacing 9
3.5 Proposed Order of Works 10
3.6 Site Manager's Point of Contact for Arboricultural Input 10

4. Conclusions 11

APPENDICES

Tree Protection Plan Appendix A
Works Auditing Schedule Appendix B
Tree Survey Schedule Appendix C
Tree Constraints Plan Appendix D
Tree Protection Barrier Specifications Appendix E

1 INTRODUCTION

1.1 Background

1.1.1 Aspect Arboriculture are instructed by BDW Southern Counties to prepare an Arboricultural Impact Assessment & Method Statement to detail the arboricultural effect and tree protection measures associated with the introduction of consented residential development at New Place Farm, Pulborough.

1.1.2 Planning consent for the development has been granted subject to conditions under ref DC/21/2321. One pre-commencement Condition relates to arboriculture. Condition no.5 requires the production of a Tree Protection Plan and, where needed, construction methodology to ensure the confident protection of retained trees. This AMS has been produced in direct response to this condition, and includes a schedule of works requiring auditing.

1.1.3 Condition 5 reads:

Pre-Commencement Condition: *No development (including demolition pursuant to the permission granted, ground clearance, or bringing equipment, machinery or materials onto the site), shall commence until the following preliminaries have been completed in the sequence set out below:*

- *All hedgerows, trees and vegetation on the site shown for retention within the Arboricultural Impact Assessment [edp3037_r012c] as well as those off-site whose root protection areas ingress into the site, shall be fully protected throughout all construction works by tree protective fencing affixed to the ground in full accordance with section 6 of BS 5837 'Trees in Relation to Design, Demolition and Construction - Recommendations' (2012).*
- *Once installed, the fencing shall be maintained during the course of the development works and until all machinery and surplus materials have been removed from the site.*
- *Areas so fenced off shall be treated as zones of prohibited access, and shall not be used for the storage of materials, equipment or machinery in any circumstances. No mixing of cement, concrete, or use of other materials or substances shall take place within any tree protective zone, or close enough to such a zone that seepage or displacement of those materials and substances could cause them to enter a zone.*

Any trees or hedges on the site which die or become damaged during the construction process shall be replaced with trees or hedging plants of a type, size and in positions agreed by the Local Planning Authority.

1.1.4 This AIA, AMS, Works Auditing Schedule and Tree Protection Plan (TPP) has been prepared in direct response to the Council's request and Policy requirement, and specifies all safeguarding measures which must be adopted during the development to minimise harm occurring to retained trees, including those which are under third party control and are positioned outside of the application area boundary.

1.1.5 It is our understanding that this work will be submitted to Horsham District Council, to enable determination of the application. Once approved, the safeguarding measures and works should be implemented as specified and maintained to the Council's satisfaction until completion of the works identified.

1.1.6 The confident protection of retained trees will be achieved through the use of the appended Tree Protection Plan (appendix A) and Works Auditing Schedule (appendix B), alongside other supporting documents included within appendices C, D and E.

1.1.7 This updated document has been produced in response to receipt of drainage proposals which postdate the previous submitted revision.

1.2 Scope

1.2.1 This work relates to arboriculture therefore reliance should not be given to comments made in respect of other disciplines i.e. civil engineering or construction phasing, without first referencing an appropriate expert.

1.3 Limitations

1.3.1 This document has been prepared to identify the arboricultural effect of the proposals and detail safeguarding measures during development and should not be interpreted as a report on tree health and safety. Reasonable effort has been made to identify visible defects whilst carrying out the tree survey, however trees are prone to natural failure without warning; no guarantee can be made as to the absolute safety of any of the trees surveyed.

1.3.2 Aspect's opinion of tree condition and structural potential is valid for a limited twelve month period from the date of survey. Validity is assumed in the absence of inclement weather and no change to the trees' existing context. A copy of the site's tree survey information is provided within appendix C.

2 ARBORICULTURAL IMPACT ASSESSMENT

2.1 Tree Removals

2.1.1 Introducing the consented development to the former nursery will unavoidably incur tree removal. Through design, the unavoidable removals have been focused solely only low quality components of the tree cover, with all moderate and high quality (category A & B) tree cover retained as features of the proposed development.

2.1.2 Notably, the inclusion of the Hybrid Black Poplar collections G23 and G18 accord with the Council's advice provided during the outline application. It is however proposed that these removals are phased to limit their initial landscape effect. The initial removals should comprise trees with particularly poor basal condition, alongside a repollarding of the remainder to the previous pruning points. This will abate the risk currently posed and will allow the maturation of replacement plantings which will ultimately compensate for their removals.

2.1.3 **Table 1:** Tree Removals to implement consented development.

Category A	Category B	Category C
None	**None**	**T53** Willow-leaved Pear **G8, G29** Leyland Cypress **G14+Δ** (c.3m section) **G18+Δ** (Phased -c.3m section for drainage) **G22+** **G23** Goat Willow & Hybrid Black Poplar **G24+Δ** **G26Δ** Alder & Goat Willow **G30+** **G31+** **G32+Δ** (c.3m section) **G33+Δ** (c.25m section) **G34+** **G36+** **H1+** **H2+Δ**

+ Denotes assemblage of three or more species (refer to appendix C)
Δ Denotes partial removal of tree group or hedge

2.1.4 In addition, to the removals required to deliver the consented development, it is also recommended that low quality remnants of the former plant nursery are removed from within the northern portion of the site to all the introduction of a higher quality coherent scheme of landscaping to be introduced.

2.1.5 **Table 2:** Tree removals to introduce proposed landscape provision

Category A	Category B	Category C
None	**None**	**T6** Tulip Tree **T59 & T60** Narrow Leaved Ash **G2+** (scrub) **G4+** **G6+** **G7+** **G8** Leyland Cypress

+ Denotes assemblage of three or more species (refer to appendix B)
Δ Denotes partial removal of tree group or hedge

2.1.6 Trees to be removed will be spray marked with a red flash by the project arboriculturist to safeguard against erroneous felling.

2.1.7 Felling works should be timed to avoid the main nesting season for birds between 1st March and 31st August. If scheduled within this period an ecologist must be present to advise on any necessary protective measures, and to confirm that tree works are not likely to cause disturbance to nesting birds.

2.1.8 This work will be undertaken in accordance with the principles within BS3998:2010 by a qualified and competent contractor to ensure cuts are performed correctly and positioned so as to avoid damage/harm to surrounding retained trees.

2.2 Pruning Works

2.2.1 Although not required to accommodate the proposed development parcels, it is recommended that dead and dysfunctional branches are removed from the canopies of established retained trees oversailing areas of high public use, including highway, to help mitigate the risk of future tree related hazards emerging. It is also recommended that a climbed inspection of the trees' structural condition is undertaken at the same time as the deadwood removal is undertaken.

2.2.2 This is of particular relevance to retained sections of Poplar collections G18, G19 and onsite components of G33. The work required comprises repeat pollarding of the collections as a whole, to the previous pruning points; seeking the abatement of risk currently posed by the trees. Several components within the collection G18 are significantly decayed within their bole, such that the immediate removal of the complete tree is recommended – fortuitously, these are focussed at the proposed vehicular access point; where their removal would be required regardless of their diminished condition..

2.2.3 Pruning works should be timed to avoid the main nesting season for birds between 1st March and 31st August. If scheduled within this period an ecologist must be present to advise on any necessary protective measures, and to confirm that tree works are not likely to cause disturbance to nesting birds.

2.2.4 Pruning work must be undertaken in accordance with section 7.3 (for removal of deadwood), section 7.8 (for selective pruning) and section 7.10 (for pollarding) of BS3998:2010. A

qualified and competent contractor should be employed to ensure that cuts are performed correctly and positioned so as to avoid future structural defects or physiological issues, facilitate growth and maintain aesthetic value.

3 METHOD STATEMENT

3.1 Tree Protection Plan

3.1.1 The Tree Protection Plan (TPP) provided in appendix A will be relied upon during the works. It should be read in conjunction with the entirety of this document. To prevent avoidable damage occurring to retained trees or erroneous tree loss, a scaled A1 copy of the TPP, accompanied by a copy of this document will be provided to the Site Manager. This will ensure they are able to:

- Clearly identify all retained trees;
- Identify the correct locations for tree protection barriers;
- Identify features of the site that must be prepared/installed under an arboricultural watching brief;
- Request attendance of the Project Arboriculturist on site for site monitoring and to provide advice in case of any emerging issues;
- Demonstrate compliance with the Council's consent for the works by safeguarding trees which are to be retained, and evidencing this by completing the Works Auditing Schedule (appendix B).

3.2 Protective Barriers & Ground Protection

3.2.1 Tree protection barriers are required to safeguard retained trees from damage during construction works. Protective barriers must therefore be installed before any construction works are carried out, and remain in situ until completion of works in the vicinity. Where the direct protection of trees is required, the protective barriers should comprise the default specification provided within BS5837:2012 (barrier type A below).

3.2.2 Plate 1. Tree Protection Barriers.

3.2.3 Where hedgerows are to be protected, it is appropriate to use a reduced specification of barrier. This specification is illustrated above as Barrier Type B, omits diagonal bracing to the rear, and is formed of heras panels mounted on pinned feet. Rigidity is ensured through the use of a driven 100x100mm timber post or scaffold pole every second panel.

3.2.4 The location for protective barriers has been informed by retained trees' canopy extents, root protection areas (RPA), and where possible, areas designated for structural landscaping that need to be protected from construction operations to prevent soil structure from being damaged. The alignment of protective barriers is illustrated with a bold blue line within the TPP (appendix A) illustrating the default barrier, and a light blue dashed line denoting the reduced specification barrier.

3.2.5 It is necessary to offset the tree protection barriers from the external walls of plot 65 to allow for the erection of scaffolding. Where this is required, the intermediate area of Root Protection Area will be protected from compaction or disturbance during development. This can be achieved through the installation of polyethylene trackmats or similar prior to commencement and which remain in situ for the duration of construction in the vicinity. The area where ground protection is required is illustrated within the Tree Protection Plan with a light blue hatch.

3.2.6 The Site Manager will be responsible for arranging attendance of the Project Arboriculturist, for the purpose of setting out barriers; issues will be resolved on site and reported to the Council's Arboricultural Officer by the Project Arboriculturist.

3.3 Supervised Excavation

3.3.1 As part of the development proposal there is also a requirement to carry out excavation works within the RPAs of retained trees. The areas of RPAs affected are toward the periphery of the RPAs where the presence of significant roots is unlikely, and the natural turnover of rooting material is highest.

3.3.2 Table 2. Excavation Works.

Tree		Excavation Works
T58	-	3.8m^2 (3.3%) of RPA to accommodate highway improvements
G18	-	Proposed drainage route (through cleared section) to be excavated under direct arboricultural supervision.
G28	-	Inspection chambers to be excavated by hand for first c.600mm depth; drainage route to be directionally drilled under tree line

3.3.3 To avoid detriment occurring to the affected trees, the excavation works must be carried out sensitively and under arboricultural supervision, adopting the principles within section 7.2 of BS5837:2012. The extent of excavation works which must be carried out under arboricultural supervision are illustrated within the TPP (appendix A) with an orange wash.

3.3.4 The drainage route through cleared section of group G18 is to be excavated by machine due to the depth and size of the excavation required. This work is to be carried out under direct arboricultural supervision to prevent accidental damage to adjacent trees.

3.3.5 During supervised excavation works within the RPAs of retained trees, the following procedure will be adopted:

i. The breaking up and clearance of the existing soils must be undertaken under arboricultural supervision, using a low impact method of excavation, utilising hand tools, an air-spade, or a vacuum excavator.

ii. If necessary, roots that are less than 25mm diameter will be pruned back, preferably to a side branch, using sharp cutting tools in accordance with best practice i.e. using secateurs or pruning saw.

iii. During the works the protective bark of larger roots is not to be damaged, until the project arboriculturist has judged whether they can be retained or not.

iv. No roots over 25mm will be pruned without approval of the appointed Project Arboriculturist as they may be integral to tree health and stability. If it becomes necessary to prune roots over 25mm diameter to accommodate site features, the Project Arboriculturist will provide the Developer and the Council's Arboricultural Officer with appropriate recommendations for remedial action/ management.

v. Any exposed roots which can be retained will be covered in hessian or clean top soil to protect from dehydration and temperature flux. Hessian is to be removed prior to backfilling.

vi. Areas adjacent to roots that are to be filled with concrete will be lined with an impermeable membrane to prevent concrete leachate coming into contact with tree roots.

vii. Any use of an excavator to complete excavations will occur from outside the trees' RPA (which will be spray-marked on the ground in advance of the works taking place). A toothless bucket will be utilised at all times.

viii. A record of exposed roots will be made and accompanied by a photographic log.

ix. Should any issues be raised during the works then the Project Arboriculturist will inform the Developer and the Council's Arboricultural Officer, indicating the nature of the problem and recommendations for remedial action (if required).

x. Tree protection barriers are to be reinstated or repositioned on completion - whichever is within the interest of protecting RPAs. This will be determined by the Project Arboriculturist.

xi. Upon request, written confirmation of the works being undertaken to a satisfactory standard can be provided to the Developer and the Council's Arboricultural Officer by the Project Arboriculturist.

3.4 Above Soil Hard Surfacing

3.4.1 The proposed development also includes the introduction of footpath passing through the RPA of G28. To prevent root severance associated with traditional construction, it will be necessary to construct the section utilising a CellWeb (or similar) sub-base, thereby minimising any requirement for excavation. The area where above soil surfacing must be utilised is illustrated within the TPP (appendix A) with a blue wash

3.4.2 The construction of the new hard surfacing above existing ground levels will be achieved by utilising a 75mm depth standard CellWeb sub-base for footpath (as a minimum). Within RPAs, the surfaces will be overlain with a permeable wearing course and non-invasive retaining edges (refer to Figure 2 overleaf).

3.4.3 Installation of CellWeb will adopt the following procedure:

Pre-commencement:

i. The Project Arboriculturist will brief the installation team on the importance of preventing soil compaction, oxygen/moisture restriction and the need for any excavation works within RPAs which may incur unnecessary root severance.

ii. Where protective barriers need to be temporarily repositioned to facilitate working room, areas of exposed RPA's will be protected by polyethylene Trackmats.

iii. The Project Arboriculturist will spray-mark the extent of affected RPAs on the ground prior to the commencement of works occurring for the benefit of machinery operators. A photograph of the spray-marked RPA limit and extent of affected area will be taken.

Installation:

iv. To prevent migration of the infill material and future loss of structural integrity, the area requiring no-dig surfacing must be covered with a porous geotextile underlay. This is to occur before installation of the cellular confinement system.

v. The cellular confinement system will be staked and expanded across the installation footprint area then cut to size.

vi. The edges are to be retained with non-invasive timber boards pinned with wooden stakes and an earth batter.

3.4.4 **Figure 2.** Typical CellWeb Section.

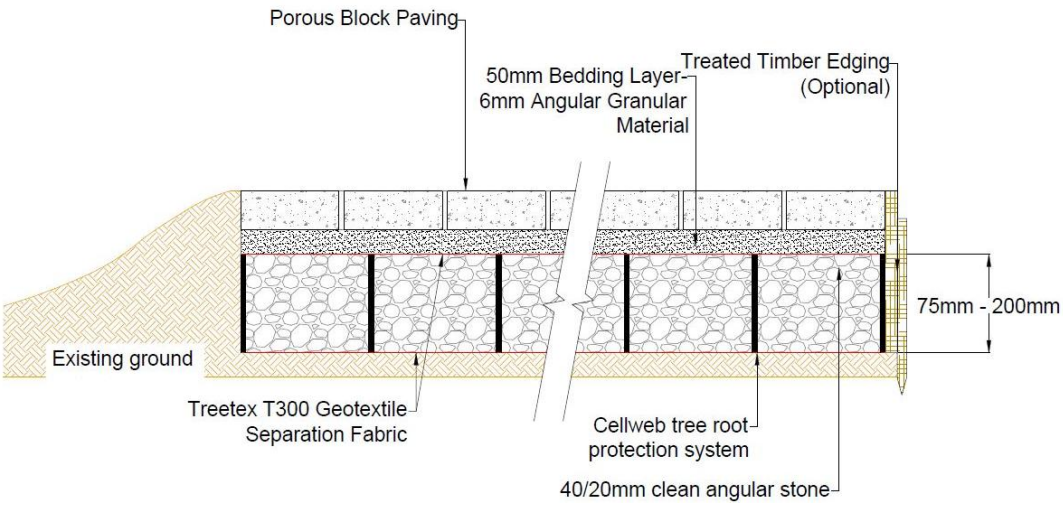

3.5 **Proposed Order of Works**

i. Site meeting between the Project Arboriculturist, Site Manager and the Council's Arboricultural Officer prior to commencement of the works. Stages of arboricultural auditing/monitoring requirements will be identified/agreed.

ii. Necessary tree removals to be carried out prior to installation of tree protection barriers and commencement of construction in the vicinity.

iii. Tree protection barriers are to be installed following removals and prior to construction works commencing in the vicinity. Upon request, barrier positions can be set-out by the Project Arboriculturist, as detailed within this document.

iv. The Council's Arboricultural Officer shall be informed of the proposed commencement date as soon as possible to allow the inspection of protection measures.

v. The Site Manager will assume responsibility for arranging the attendance of the Project Arboriculturist for the supervision of works within retained trees' RPAs, as detailed with the Works Auditing Schedule (appendix B).

3.6 **Site Manager's Point of Contact for Arboricultural Input:**

A. Mr James Bardey
Principal Arboricultural Consultant
Aspect Arboriculture
Telephone: 01295 276066
Email: James.Bardey@aspect-arbor.com

4 CONCLUSIONS

4.1 This document has been prepared in response to condition 5 attached to the site's planning consent (ref: DC/21/2321). The document has been prepared to demonstrate how retained trees will be safely integrated as part of the scheme, and construction mitigation required to minimise root disturbance during the proposed development. It has been informed by guidance provided in BS5837:2012 including a survey of the site's existing trees (surveyed during May 2024).

4.2 Pursuant to the instruction, this document and its supporting work (Appendices A - E) identifies all aspects of the proposed works that must be managed to facilitate the confident protection of retained trees during construction.

4.3 To ensure confident tree retention, siting of tree protection barriers and the specified construction works must be audited by the Project Arboriculturist; the outcome of these works will be reported to the Council's Arboricultural Officer on completion. These elements are specified within the Works Auditing Schedule (appendix B).

4.4 It is Aspect's opinion that, subject to strict adherence to this document, the proposed development can be constructed without detrimentally affecting retained trees.

APPENDICES

APPENDIX A

TREE PROTECTION PLAN (12072 TPP 01 Rev C)

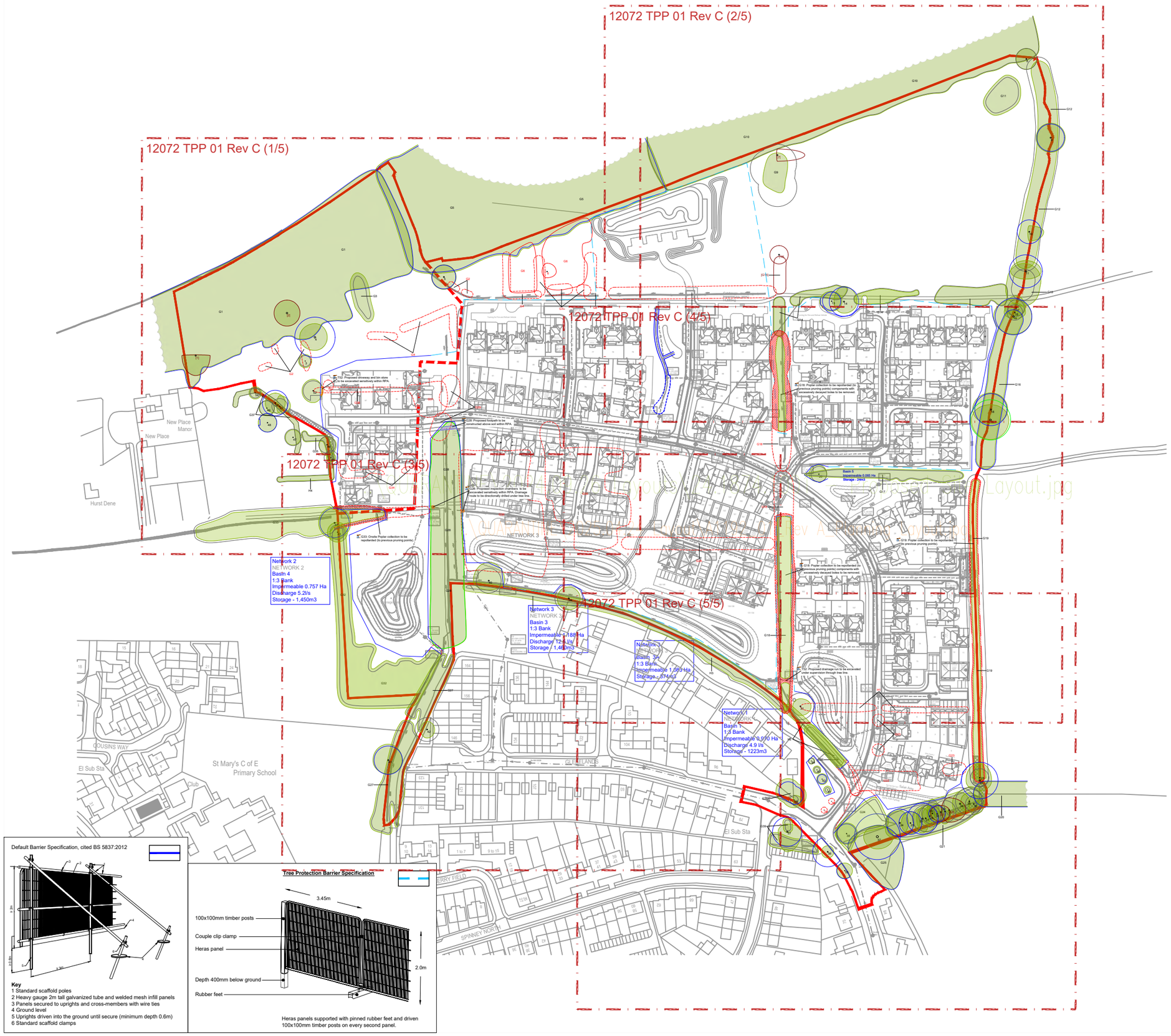

Default Barrier Specification, cited BS 5837:2012

Key
1 Standard scaffold poles
2 Heavy gauge 2m tall galvanized tube and welded mesh infill panels
3 Panels secured to uprights and cross-members with wire ties
4 Ground level
5 Uprights driven into the ground until secure (minimum depth 0.6m)
6 Standard scaffold clamps

Tree Protection Barrier Specification

Heras panels supported with pinned rubber feet and driven 100x100mm timber posts on every second panel.

1:2500 @ A3

0m 20m 40m 100m

KEY:

- Site Boundary
- 15 Tree Numbers
- Tree Canopies
- (8) Category 'U' Trees
- Category 'A' RPA
- Category 'B' RPA
- Category 'C' RPA
- 8 Trees to be Removed
- Pruning Works
- Tree Protection Barrier
- Tree Protection Barrier (Secondary Specification)
- Tree Protection Barrier (2nd Position)
- Supervised Excavation
- Above Soil Surfacing

Note: Trees 1, 16, 17, 23, 32, 36-39, 41, 42, Groups G1-G3, G5-G7, G10, G11, G14, G16, G17, G19-G21, G23-G27, G30, G32-G34 and Hedgerows H1-H3 have been plotted using measurements onsite in conjunction with aerial imagery. Their locations were not recorded on the topographical survey of the site.

Note: The RPA footprint for Trees 48, 52, 55 & 56 have been displaced to allow for the effect of the adopted highway. The surface area of the RPA has not been reduced.

REV	DATE	NOTE	Drawn	Chk'd
C	Dec '25	Updated to include drainage proposals	JB	n/a
B	Jun '25	Updated to new layout	JB	n/a
A	Feb '25	Updated to illustrate phased removal	JB	n/a

REVISIONS

aspect arboriculture

TITLE
New Place Farm, Pulborough
Tree Protection Plan

CLIENT
David Wilson Homes, Southern Counties

SCALE	DATE	DRAWN
1:2500 @ A3	DEC 2024	GW

DRAWING NUMBER
12072 TPP 01 Rev C (Overview)

REVISION

Based on: A1192_09D_Planning Layout &
X-LDE-Drainage Redrow PLANNING

Default Barrier Specification, cited BS 5837:2012

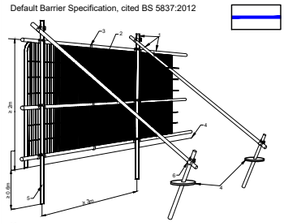

Key
1 Standard scaffold poles
2 Heavy gauge 2m tall galvanized tube and welded mesh infill panels
3 Panels secured to uprights and cross-members with wire ties
4 Ground level
5 Uprights driven into the ground until secure (minimum depth 0.6m)
6 Standard scaffold clamps

Tree Protection Barrier Specification

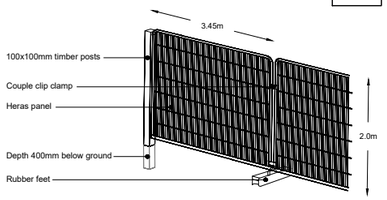

Heras panels supported with pinned rubber feet and driven 100x100mm timber posts on every second panel.

1:1000 @ A3

0m 10m 20m 40m

KEY:

- Site Boundary
- Tree Numbers
- Tree Canopies
- Category 'U' Trees
- Category 'A' RPA
- Category 'B' RPA
- Category 'C' RPA
- Trees to be Removed
- Pruning Works
- Tree Protection Barrier
- Tree Protection Barrier (Secondary Specification)
- Tree Protection Barrier (2nd Position)
- Supervised Excavation
- Above Soil Surfacing

Note: Trees 1, 16, 17, 23, 32, 36-39, 41, 42, Groups G1-G3, G5-G7, G10, G11, G14, G16, G17, G19-G21, G23-G27, G30, G32-G34 and Hedgerows H1-H3 have been plotted using measurements onsite in conjunction with aerial imagery. Their locations were not recorded on the topographical survey of the site.

Note: The RPA footprint for Trees 48, 52, 55 & 56 have been displaced to allow for the effect of the adopted highway. The surface area of the RPA has not been reduced.

REV	DATE	NOTE	Drawn	Chk'd
C	Dec '25	Updated to include drainage proposals	JB	n/a
B	Jun '25	Updated to new layout	JB	n/a
A	Feb '25	Updated to illustrate phased removal	JB	n/a

REVISIONS

aspect arboriculture

TITLE
New Place Farm, Pulborough Tree Protection Plan

CLIENT
David Wilson Homes, Southern Counties

SCALE	DATE	DRAWN
1:1000 @ A3	DEC 2024	GW

DRAWING NUMBER	REVISION
12072 TPP 01 Rev C (1/5)	

Based on: A1192_09D_Planning Layout & X-LDE-Drainage Redrow PLANNING

T52: Proposed driveway and bin store to be excavated sensitively within RPA.

G28: Proposed footpath to be constructed above soil within RPA.

G28: Proposed inspection chambers to be excavated sensitively within RPA. Drainage route to be directionally drilled under tree line.

G33: Onsite Poplar collection to be repollarded (to previous pruning points).

New Place Manor

New Place

NETWORK 3

Default Barrier Specification, cited BS 5837:2012

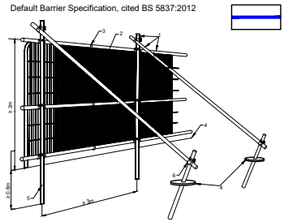

Key
1 Standard scaffold poles
2 Heavy gauge 2m tall galvanized tube and welded mesh infill panels
3 Panels secured to uprights and cross-members with wire ties
4 Ground level
5 Uprights driven into the ground until secure (minimum depth 0.6m)
6 Standard scaffold clamps

Tree Protection Barrier Specification

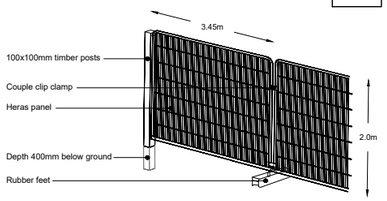

Heras panels supported with pinned rubber feet and driven 100x100mm timber posts on every second panel.

1:1000 @ A3

0m 10m 20m 40m

KEY:

- Site Boundary
- Tree Numbers
- Tree Canopies
- Category 'U' Trees
- Category 'A' RPA
- Category 'B' RPA
- Category 'C' RPA
- Trees to be Removed
- Pruning Works
- Tree Protection Barrier
- Tree Protection Barrier (Secondary Specification)
- Tree Protection Barrier (2nd Position)
- Supervised Excavation
- Above Soil Surfacing

Note: Trees 1, 16, 17, 23, 32, 36-39, 41, 42, Groups G1-G3, G5-G7, G10, G11, G14, G16, G17, G19-G21, G23-G27, G30, G32-G34 and Hedgerows H1-H3 have been plotted using measurements onsite in conjunction with aerial imagery. Their locations were not recorded on the topographical survey of the site.

Note: The RPA footprint for Trees 48, 52, 55 & 56 have been displaced to allow for the effect of the adopted highway. The surface area of the RPA has not been reduced.

REV	DATE	NOTE	Drawn	Chk'd
C	Dec '25	Updated to include drainage proposals	JB	n/a
B	Jun '25	Updated to new layout	JB	n/a
A	Feb '25	Updated to illustrate phased removal	JB	n/a

REVISIONS

aspect arboriculture

TITLE

New Place Farm, Pulborough
Tree Protection Plan

CLIENT

David Wilson Homes, Southern Counties

SCALE	DATE	DRAWN
1:1000 @ A3	DEC 2024	GW

DRAWING NUMBER: 12072 TPP 01 Rev C (2/5)

REVISION

Based on: A1192_09D_Planning Layout & X-LDE-Drainage Redrow PLANNING

a. G28: Proposed inspection chambers to be excavated sensitively within RPA. Drainage route to be directionally drilled under tree line.

a. G33: Onsite Poplar collection to be repollarded (to previous pruning points).

NETWORK 3

Network 3
NETWORK 3
Basin 3
1:3 Bank
Impermeable 1.188 Ha
Discharge 12.5 l/s
Storage - 1,460m3

Network 3
NETWORK 3
Basin 3A
1:3 Bank
Impermeable 1.083 Ha
Storage - 374m3

Network 1
NETWORK 1
Basin 1
1:3 Bank
Impermeable 0.970 Ha
Discharge 4.9 l/s
Storage - 1223m3

GLEBELANDS

El Sub Sta

Drainage Pond

Default Barrier Specification, cited BS 5837:2012

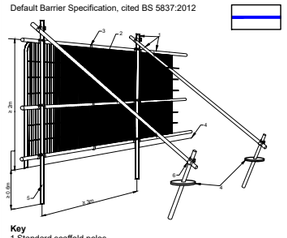

Key
1 Standard scaffold poles
2 Heavy gauge 2m tall galvanized tube and welded mesh infill panels
3 Panels secured to uprights and cross-members with wire ties
4 Ground level
5 Uprights driven into the ground until secure (minimum depth 0.6m)
6 Standard scaffold clamps

Tree Protection Barrier Specification

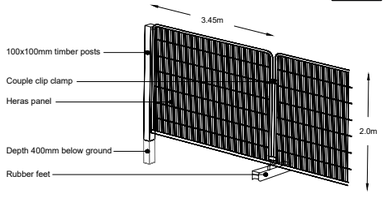

Heras panels supported with pinned rubber feet and driven 100x100mm timber posts on every second panel.

1:1000 @ A3

0m 10m 20m 40m

KEY:

- Site Boundary
- 15 Tree Numbers
- Tree Canopies
- (8) Category 'U' Trees
- Category 'A' RPA
- Category 'B' RPA
- Category 'C' RPA
- 8 Trees to be Removed
- Pruning Works
- Tree Protection Barrier
- Tree Protection Barrier (Secondary Specification)
- Tree Protection Barrier (2nd Position)
- Supervised Excavation
- Above Soil Surfacing

Note: Trees 1, 16, 17, 23, 32, 36-39, 41, 42, Groups G1-G3, G5-G7, G10, G11, G14, G16, G17, G19-G21, G23-G27, G30, G32-G34 and Hedgerows H1-H3 have been plotted using measurements onsite in conjunction with aerial imagery. Their locations were not recorded on the topographical survey of the site.

Note: The RPA footprint for Trees 48, 52, 55 & 56 have been displaced to allow for the effect of the adopted highway. The surface area of the RPA has not been reduced.

REV	DATE	NOTE	Drawn	Chk'd
C	Dec '25	Updated to include drainage proposals	JB	n/a
B	Jun '25	Updated to new layout	JB	n/a
A	Feb '25	Updated to illustrate phased removal	JB	n/a

REVISIONS

aspect arboriculture

TITLE
New Place Farm, Pulborough
Tree Protection Plan

CLIENT
David Wilson Homes, Southern Counties

SCALE	DATE	DRAWN
1:1000 @ A3	DEC 2024	GW

DRAWING NUMBER: 12072 TPP 01 Rev C (3/5)

REVISION

Based on: A1192_09D_Planning Layout & X-LDE-Drainage Redrow PLANNING

1:1000 @ A3

0m 10m 20m 40m

KEY:

- Site Boundary
- Tree Numbers
- Tree Canopies
- Category 'U' Trees
- Category 'A' RPA
- Category 'B' RPA
- Category 'C' RPA
- Trees to be Removed
- Pruning Works
- Tree Protection Barrier
- Tree Protection Barrier (Secondary Specification)
- Tree Protection Barrier (2nd Position)
- Supervised Excavation
- Above Soil Surfacing

Note: Trees 1, 16, 17, 23, 32, 36-39, 41, 42, Groups G1-G3, G5-G7, G10, G11, G14, G16, G17, G19-G21, G23-G27, G30, G32-G34 and Hedgerows H1-H3 have been plotted using measurements onsite in conjunction with aerial imagery. Their locations were not recorded on the topographical survey of the site.

Note: The RPA footprint for Trees 48, 52, 55 & 56 have been displaced to allow for the effect of the adopted highway. The surface area of the RPA has not been reduced.

REV	DATE	NOTE	Drawn	Chk'd
C	Dec '25	Updated to include drainage proposals	JB	n/a
B	Jun '25	Updated to new layout	JB	n/a
A	Feb '25	Updated to illustrate phased removal	JB	n/a

REVISIONS

aspect arboriculture

TITLE

New Place Farm, Pulborough
Tree Protection Plan

CLIENT

David Wilson Homes, Southern Counties

SCALE	DATE	DRAWN
1:1000 @ A3	DEC 2024	GW

DRAWING NUMBER: 12072 TPP 01 | REVISION: Rev C (4/5)

Based on: A1192_09D_Planning Layout & X-LDE-Drainage Redrow PLANNING

Network 3
NETWORK 3
Basin 3A
1:3 Bank
Impermeable 1.083 Ha
Storage - 374m3

Network 1
NETWORK 1
Basin 1
1:3 Bank
Impermeable 0.970 Ha
Discharge 4.9 l/s
Storage - 1223m3

G18: Poplar collection to be repollarded (to previous pruning points) components with excessively decayed boles to be removed.

G19: Poplar collection to be repollarded (to previous pruning points).

T52: Proposed drainage run to be excavated under supervision through tree line.

GLEBELANDS

Sales Area

Sales Area Parking

El Sub Sta

Default Barrier Specification, cited BS 5837:2012

Key
1 Standard scaffold poles
2 Heavy gauge 2m tall galvanized tube and welded mesh infill panels
3 Panels secured to uprights and cross-members with wire ties
4 Ground level
5 Uprights driven into the ground until secure (minimum depth 0.6m)
6 Standard scaffold clamps

Tree Protection Barrier Specification

3.45m
100x100mm timber posts
Couple clip clamp
Heras panel
Depth 400mm below ground
Rubber feet
2.0m

Heras panels supported with pinned rubber feet and driven 100x100mm timber posts on every second panel.

1:1000 @ A3

0m 10m 20m 40m

KEY:

- Site Boundary
- Tree Numbers
- Tree Canopies
- Category 'U' Trees
- Category 'A' RPA
- Category 'B' RPA
- Category 'C' RPA
- Trees to be Removed
- Pruning Works
- Tree Protection Barrier
- Tree Protection Barrier (Secondary Specification)
- Tree Protection Barrier (2nd Position)
- Supervised Excavation
- Above Soil Surfacing

Note: Trees 1, 16, 17, 23, 32, 36-39, 41, 42, Groups G1-G3, G5-G7, G10, G11, G14, G16, G17, G19-G21, G23-G27, G30, G32-G34 and Hedgerows H1-H3 have been plotted using measurements onsite in conjunction with aerial imagery. Their locations were not recorded on the topographical survey of the site.

Note: The RPA footprint for Trees 48, 52, 55 & 56 have been displaced to allow for the effect of the adopted highway. The surface area of the RPA has not been reduced.

REV	DATE	NOTE	Drawn	Chk'd
C	Dec '25	Updated to include drainage proposals	JB	n/a
B	Jun '25	Updated to new layout	JB	n/a
A	Feb '25	Updated to illustrate phased removal	JB	n/a

REVISIONS

aspect arboriculture

TITLE
New Place Farm, Pulborough
Tree Protection Plan

CLIENT
David Wilson Homes, Southern Counties

SCALE	DATE	DRAWN
1:1000 @ A3	DEC 2024	GW

DRAWING NUMBER
12072 TPP 01 Rev C (5/5)

REVISION

Based on: A1192_09D_Planning Layout &
X-LDE-Drainage Redrow PLANNING

APPENDIX B

WORKS AUDITING SCHEDULE

Works Auditing Schedule

Works Requiring Auditing	Tree No.	Date Undertaken	Date Reported to LPA
1. Pre-commencement meeting identifying tree removals, tree protection barrier locations and safeguarding measures, as specified within 12072_AIA.001 Rev B and illustrated on drawing no. 12072_TPP.01 Rev C.	As drawn		
2: Inspection of tree protection barriers and prior to commencement of works by Project Arboriculturist.	As drawn		
3: Above Soil Hard Surfacing	G28		
4: Supervised Excavation	T52 G18 G28		

This schedule will be completed as evidence that works have been undertaken as per the approved methodology.

APPENDIX C

TREE SURVEY SCHEDULE (12072 TS 01)

aspect arboriculture

BS 5837:2012 Tree Schedule: New Place Farm, Pulborough

12072 TS 01

aspect arboriculture

BS5837:2012 Tree Survey: Explanation of Survey Criteria

*Area around tree deemed to contain sufficient roots and rooting volume to maintain the tree's viability, and where the protection of roots and soil structure is a priority. *The RPA has been manipulated to allow for various site features, i.e. roads, structures or changes in levels. Please refer to the Tree Constraints Plan for these changes.*

e.g.: young, semi-mature, early-mature, mature or over-mature

Sequential reference number cited on all aspect drawing.

Category prefix A-C denotes arboricultural quality, decreasing from A (high) to C (low); Subcategories 1, 2 and 3 highlight associated arboricultural (1), landscape (2) and ecological (3) qualities.

Height and Crown spread measured to the nearest half meter; # denotes where this is estimated.

Category U trees are those in such a condition that they cannot be realistically retained as living trees in the current context for the long term.

Tree Number	Common Species Name	Trunk Diameter (mm)	Height (m)	Crown Spread (m)					Crown Clearance (m)	Life Stage	Physiological Condition	Structural Condition	Comments	BS5837 Category	RPA Radius (m)
				N	E	S	W	radial							

Measured to the nearest 10mm; # denotes estimated diameter where access is not possible.

e.g.: above-average, average, below average or dead

General observations, i.e. defects, preliminary management recommendation, presence of pests/disease, perceived significance.

Height of first significant branch and/or canopy

e.g.: good, indifferent, poor, or hazardous

Colour band key:

Category A
Category B
Category C
Category U

The following survey should not be interpreted as a report on tree health and safety. Aspect's opinion of tree condition and structural potential is valid for a limited period of 12 months from the date of inspection. Validity is assumed in the absence of inclement weather and no change to the trees existing setting.

Tree Number	Common Species Name	Trunk Diameter (mm)	Height (m)	Crown Spread (m) N	E	S	W	Radial	First Significant Branch (m)	Crown Clearance (m)	Life Stage	Physiological Condition	Structural Condition	Comments	BS5837 Category	RPA Radius (m)
1	Hybrid Black Poplar	840 oi	23#	0.5	9.5	13	9#		6	6#	Mature	Average	Hazardous	Clad and obscured by Ivy, unable to thoroughly inspect Large cavity on northern aspect of trunk from c.1m to c.3m, active decay within Leans south from ground level Hazardous structural condition, unsuitable for retention	U	N/A
2	Sycamore	1000# at base	20#					8.5	2.5	2.5	Mature	Below Average	Poor	Clad and obscured by Ivy, unable to thoroughly inspect Low crown break Above average internal deadwood Suspected *Ganoderma applantum* on eastern aspect of trunk Multiple cavities and areas of decay within trunk, branch unions and scaffold structure	U	N/A
3	Purple Plum	2*200 2*90 #	7					4.25	1	1	Early Mature	Average	Indifferent	Clad and obscured by Ivy, unable to thoroughly inspect Stem inaccessible due to dense understory Unremarkable example of species	C12	3.6
4	Sycamore	850 690 oi	14	9	8	8.5	10		1.5	1.5	Mature	Average	Poor	Clad and obscured by Ivy, unable to thoroughly inspect Frontage component of G1 Slightly sparse crown for species Average internal deadwood with large diameter in lower crown Bifurcates from c.0.5m, union obscured by Ivy Western stem leans heavily to west Cavity within old wound in western aspect of western stem Recommend PiCUS investigation to determine extent of dysfunctional wood with full review of category upon results Individually of low significance, conferred moderate value as component of wider collective	B2	13.2
5	English Oak	400 500 #	13					8	1.5#	1.5	Early Mature	Average	Indifferent	Clad and obscured by Ivy, unable to thoroughly inspect Partially obscured by bramble Squat crown form Low crown break Well balanced radial crown and scaffold structure Ditch west of stem running northwest to southwest Appears to bifurcate from ground level Moderate example of species	B12	7.8
6	Tulip Tree	430 oi	14	5.5	6	4	3.25		3	2.5	Early Mature	Average	Indifferent	Clad and obscured by Ivy, unable to thoroughly inspect Component of G6 Etiolated form Mutually suppressed and cohesive with companions Unremarkable example of species	C1	5.1

Tree Number	Common Species Name	Trunk Diameter (mm)	Height (m)	Crown Spread (m)					First Significant Branch (m)	Crown Clearance (m)	Life Stage	Physiological Condition	Structural Condition	Comments	BS5837 Category	RPA Radius (m)
				N	E	S	W	Radial								
7	Horse Chestnut	800#	6	4#	18	4	0.5		N/A	0	Early Mature	Below Average	Hazardous	Partially obscured by bramble, unable to thoroughly inspect Stem inaccessible due to dense understory Failed component of G9 Appears to have failed at base Fallen to east Hazardous structural condition, unsuitable for retention	U	N/A
8	Hybrid Black Poplar	570	21					6.75	2.5#	4.25	Early Mature	Average	Indifferent	Partially obscured by bramble, unable to thoroughly inspect Unremarkable example of species	C1	6.9
9	Ash	680 310	16					9.5	1.5	0.5	Early Mature	Average	Indifferent	Slightly sparse crown for species Impact wound on eastern aspect of trunk at c.1.5m Sub dominant stem at c.0.5m Appears to have been previously managed in height Moderate example of species	B12	9
10	English Oak	655	16	4	9.5#	6	1#		3.5	3	Early Mature	Average	Indifferent	Suppressed on western aspect by G12 Sub dominant stem at c.2m, fused at c.2.5m and again at c.3.75m Crown and scaffold structure biased east Individually of low significance, conferred moderate value as component of wider collective	B2	7.8
11	English Oak	400 550 575 #	18	7#	10#	5#	10		4#	3.75	Early Mature	Average	Indifferent	Partially obscured by bramble, unable to thoroughly inspect Stem inaccessible due to dense understory Mutually suppressed and cohesive with companions Prominent boundary feature	B2	10.8
12	Hybrid Black Poplar	680	16					6	3	1.5	Early Mature	Average	Hazardous	Previously topped at c.4m Large cavity with extensive decay in trunk from ground level to c.4.5m Hazardous structural condition, unsuitable for retention	U	N/A
13	Ash	490	14	6.5	6.75	6.5	7.75		3.75	3.75	Early Mature	Average	Indifferent	Cohesive with T14 Unsympathetic pruning to lower crown Exposed and scalped surface roots to south Individually of low significance, conferred moderate value as component of wider collective	B2	6
14	English Oak	590 530	14	10#	8.5	7.5	6.5		2.5	2	Early Mature	Average	Indifferent	Bifurcates at c.1.5m, union appears sound Cohesive with T13 Moderate example of species	B12	9.6

Tree Number	Common Species Name	Trunk Diameter (mm)	Height (m)	Crown Spread (m) N	E	S	W	Radial	First Significant Branch (m)	Crown Clearance (m)	Life Stage	Physiological Condition	Structural Condition	Comments	BS5837 Category	RPA Radius (m)
15	English Oak	1000#	20	11#	12#	11.5	13		4#	4	Mature	Average	Indifferent	Clad and obscured by Ivy, unable to thoroughly inspect Stem inaccessible due to dense understory Upper crown appears slightly sparse Multi stemmed from c.3.5m Moderate example of species	B12	12
16	Field Maple	2*300#	16	6#	7#	4#	7		1.5#	1.75	Early Mature	Average	Indifferent	Clad and obscured by Ivy, unable to thoroughly inspect Stem inaccessible due to dense understory Appears to bifurcate at c.1.5m Unremarkable example of species	C1	5.1
17	Field Maple	2*320#	12	8#	6#	5#	7.5		1#	1.75	Early Mature	Average	Indifferent	Mutually suppressed and cohesive with companions Unremarkable example of species	C1	5.4
18	English Oak	880	18	11	11#	9.25	12		2.5	3	Mature	Average	Indifferent	Historic storm damage to upper crown Snapped branch hung up in crown Cohesive with T19 Moderate example of species	B12	10.5
19	English Oak	1090	20	10	12#	12.75	12.5		1.75	3	Mature	Average	Indifferent	Cohesive with T18 Minor pruning to western aspect of lower crown to crown lift Prominent boundary feature	A2	13.2
20	White Willow	400 150 #	11	6	5.25	5	6.5		3#	0.5	Early Mature	Average	Indifferent	Partially obscured by bramble, unable to thoroughly inspect Stem inaccessible due to dense understory Sub dominant stem at c.0.5m Unremarkable example of species	C1	5.1
21	Hybrid Black Poplar	4*350 190 oi	20	5	7	6#	5		3	1	Early Mature	Average	Indifferent	Clad and obscured by Ivy, unable to thoroughly inspect Multi stemmed from ground level, union obscured by vegetation Unremarkable example of species	C1	8.7
22	Hybrid Black Poplar	1010 oi	22	11.5	7.75	6.75	9		4	3.75	Mature	Average	Indifferent	Clad and obscured by Ivy, unable to thoroughly inspect Partially obscured by bramble Stem inaccessible due to dense understory Multi stemmed from c.4m, likely to have been previously topped Prominent within moderate distance views	B2	12
23	Hybrid Black Poplar	510 oi at c.1m	16	9.25	4.25	0.5	5		4	4	Early Mature	Average	Indifferent	Clad and obscured by Ivy, unable to thoroughly inspect Partially obscured by bramble Suppressed by T22 Previously topped at c.4m Crown biased north Unremarkable example of species	C1	6

Tree Number	Common Species Name	Trunk Diameter (mm)	Height (m)	Crown Spread (m)					First Significant Branch (m)	Crown Clearance (m)	Life Stage	Physiological Condition	Structural Condition	Comments	BS5837 Category	RPA Radius (m)
				N	E	S	W	Radial								
24	Sweet Chestnut	230 2*130 290 240 330 2*400#	14	8#	5.5	7.5	9		4	4	Mature	Average	Indifferent	Average internal deadwood with large diameter in lower crown Multi stemmed from c.0.5m, likely to have been historically coppiced Two primary stems fused from c.1.5m to c.4m Mutually suppressed and cohesive with companion shelter Moderate collective value	B2	9
25	Sweet Chestnut	620 oi	14	7.5	6.25	7	6		3.5	4#	Early Mature	Average	Indifferent	Area of bark delamination to southern aspect of trunk from ground level to c.3.5m Moderate collective value	B2	7.5
26	Sweet Chestnut	850	14	7#	4.5	9.25	6		3.5	15	Mature	Average	Indifferent	Squat crown form Average internal deadwood with large diameter in lower crown Establishing basal stems to north and south Cavity within scaffold limb at c.5m Leans south from ground level Moderate example of species	B12	10.2
27	Sweet Chestnut	720	14	8.25	7#	9	6		2	2	Early Mature	Below Average	Poor	Above average internal deadwood Sparse crown for species Leans south from ground level Mutually suppressed and cohesive with companions Scaffold limb to east crossing and rubbing on scaffold limb of T28 Large diameter deadwood throughout Reduced future potential	C1	8.7
28	Sweet Chestnut	610	15	6.25	3	6#	5		6#	6#	Early Mature	Above Average	Indifferent	Clad and obscured by Ivy, unable to thoroughly inspect Stem inaccessible due to dense understory Average internal deadwood with large diameter in lower crown Mutually suppressed and cohesive with companions Unremarkable example of species	C1	7.2
29	Sweet Chestnut	580 oi	12	9.25	4.5	1#	3.5		4.5	2	Early Mature	Average	Poor	Clad and obscured by Ivy, unable to thoroughly inspect Stem inaccessible due to dense understory Average internal deadwood with large diameter in lower crown Suppressed by companions Crown and scaffold structure biased north Unremarkable example of species	C1	6.9
30	Sweet Chestnut	440 oi	15	6.5	4	7#	6.5		7.75	7	Early Mature	Average	Indifferent	Clad and obscured by Ivy, unable to thoroughly inspect Stem inaccessible due to dense understory Etiolated form Mutually suppressed and cohesive with companion shelter Individually of low significance, conferred moderate value as component of wider collective	B2	5.4

Tree Number	Common Species Name	Trunk Diameter (mm)	Height (m)	Crown Spread (m) N	E	S	W	Radial	First Significant Branch (m)	Crown Clearance (m)	Life Stage	Physiological Condition	Structural Condition	Comments	BS5837 Category	RPA Radius (m)
31	Sweet Chestnut	750#	15	4.5	6#	6#	6.75		2.75#	8.5	Early Mature	Below Average	Poor	Partially obscured by bramble, unable to thoroughly inspect Stem inaccessible due to dense understory Above average internal deadwood Sparse crown for species Dieback to upper crown In a state of terminal decline, unlikely to offer a long-term future contribution	U	N/A
32	Sweet Chestnut	600#	15#	0.5#	4#	8#	5#		4#	6#	Early Mature	Average	Poor	Partially obscured by bramble, unable to thoroughly inspect Stem inaccessible due to dense understory Leans south from ground level Suppressed by companions Low arboricultural quality	C1	7.2
33	Sweet Chestnut	720 oi	15	8	11	8#	5#		6	2	Early Mature	Below Average	Hazardous	Clad and obscured by Ivy, unable to thoroughly inspect Above average internal deadwood Dieback to upper crown Bark delamination to northern and eastern aspects of trunk Extensive decay within trunk Leans east from ground level Hazardous structural condition, unsuitable for retention	U	N/A
34	Sweet Chestnut	870 oi at c.1m	14	7.5	6.25	7#	5		1.5	2	Mature	Average	Indifferent	Clad and obscured by Ivy, unable to thoroughly inspect Stem inaccessible due to dense understory Low crown break Suspected cavity within central leader at c.7m Multiple tear out wounds within crown Mutually suppressed and cohesive with companions Unremarkable example of species	C1	10.5
35	Sweet Chestnut	740 oi	13	5.5	6#	7#	5.5		3#	3	Early Mature	Below Average	Indifferent	Clad and obscured by Ivy, unable to thoroughly inspect Sparse crown for species Dead sub dominant stem to north Unremarkable example of species	C1	9
36	Ash	440 oi	15	5.75	6.75	7#	3#		3	2	Early Mature	Average	Indifferent	Clad and obscured by Ivy, unable to thoroughly inspect Mutually suppressed and cohesive with companions Unremarkable example of species	C1	5.4
37	Sweet Chestnut	1400 oi	15	7	10.25	8#	9		6	6.5	Mature	Average	Indifferent	Clad and obscured by Ivy, unable to thoroughly inspect Sparse crown for species Average internal deadwood with large diameter in lower crown Bifurcates at c.1.75m, union tight and fused to c.4m Prominent within views from roadside Moderate example of species	B12	15

Tree Number	Common Species Name	Trunk Diameter (mm)	Height (m)	Crown Spread (m) N	E	S	W	Radial	First Significant Branch (m)	Crown Clearance (m)	Life Stage	Physiological Condition	Structural Condition	Comments	BS5837 Category	RPA Radius (m)
38	Red Oak	520	14					7	2.5	2.5	Early Mature	Average	Indifferent	Average internal deadwood with large diameter in lower crown Prominent within views from roadside Moderate example of species	B12	6.3
39	Goat Willow	3*300 5*250 #	12					7.5	0.5	0 5	Early Mature	Average	Indifferent	Stem inaccessible due to boundary fence Previously managed in height Situated on site boundary Unremarkable example of species	C1	9
40	Hybrid Black Poplar	350 300 325 280 240 #	15#	12	10.5	6#	10		3.5	2.5	Early Mature	Below Average	Poor	Partially obscured by bramble, unable to thoroughly inspect Stem inaccessible due to dense understory Multi stemmed from ground level 3no stems lean heavily to north and east over footpath Low arboricultural quality	C1	8.1
41	English Oak	780	15	10.5	9	9#	10#		2.5	3.5	Mature	Average	Indifferent	Situated to west of ditch Area of bark delamination and decay on northern and eastern aspects of base Black Rhizomorph/Bootlaces under bark, indicating presence of *Armillaria ssp.* Slight lean east towards nearby school Recommend PiCUS investigation to determine extent of dysfunctional wood with full review of category upon results Moderate example of species	B12	9.3
42	Cherry	660	12	5.25	5#	5.5	4		3	7.5	Mature	Below Average	Indifferent	Etiolated form Previously managed in height Previous unsympathetic lower limb removals Low arboricultural quality	C1	7.8
43	Norway Maple	400#	12					6.5	2.5#	2.5#	Early Mature	Average	Indifferent	Partially obscured by bramble, unable to thoroughly inspect Tear out wound within lower crown Unremarkable example of species	C1	4.8
44	Hybrid Black Poplar	800#	22#					10.5	4#	2	Mature	Average	Indifferent	Clad and obscured by Ivy, unable to thoroughly inspect Partially obscured by bramble Prominent within moderate distance views	B2	9.6
45	Horse Chestnut	370#	9					3	3	3	Semi Mature	Below Average	Indifferent	Clad and obscured by Ivy, unable to thoroughly inspect Structure appears typical for species within current context Unremarkable example of species	C12	4.5

Tree Number	Common Species Name	Trunk Diameter (mm)	Height (m)	Crown Spread (m)					First Significant Branch (m)	Crown Clearance (m)	Life Stage	Physiological Condition	Structural Condition	Comments	BS5837 Category	RPA Radius (m)
				N	E	S	W	Radial								
46	Eucalyptus	450#	14	5.5	6	7#	5#		6	6.5	Early Mature	Average	Indifferent	Clad and obscured by Ivy, unable to thoroughly inspect Structure appears typical for species within current context Unremarkable example of species	C1	5.4
47	Sycamore	450#	13					5	4#	4#	Early Mature	Average	Indifferent	Clad and obscured by Ivy, unable to thoroughly inspect Stem inaccessible due to dense understory Multi stemmed from c.4m Unremarkable example of species	C1	5.4
48	Swamp Cypress	500#	17					6	4#	4#	Early Mature	Average	Indifferent	Stem inaccessible due to dense understory Appears to be offsite Structure appears typical for species within current context Moderate example of species	B1	6
49	Silver Birch	400#	15					5	5#	5#	Early Mature	Average	Indifferent	Clad and obscured by Ivy, unable to thoroughly inspect Stem inaccessible due to dense understory Structure appears typical for species within current context Bifurcates at c.6m Unremarkable example of species	C1	4.8
50	Scots Pine	700#	17					6.5	10#	7.25	Early Mature	Average	Indifferent	Clad and obscured by Ivy, unable to thoroughly inspect Appears to bifurcate at c.5m Prominent within internal views	B2	8.4
51	Scots Pine	430 oi	9	7	7	4.5	2		6	3	Early Mature	Average	Poor	Clad and obscured by Ivy, unable to thoroughly inspect Suppressed by T50 Unsympathetic pruning to clear overhead utilities to north Crown biased north Unremarkable example of species	C1	5.1
52	Honey Locust	330 390 oi	11	7.5	6#	7.75	7.25		2.5	3	Early Mature	Average	Poor	Clad and obscured by Ivy, unable to thoroughly inspect Bifurcates at c.1.5m, union obscured by Ivy Unsympathetic pruning to clear from overhead utilities Reduced future potential due to close proximity to overhead utilities and continuous pressure for pruning	C1	6
53	Willow-Leaved Pear	300 oi	6	4.25	3.5	3	3.25		4	0.5	Early Mature	Average	Indifferent	Clad and obscured by Ivy, unable to thoroughly inspect Stem inaccessible due to dense understory Structure appears typical for species within current context Unremarkable example of species	C1	3.6
54	Katsura	270#	9					4	3#	3#	Semi Mature	Average	Indifferent	Stem inaccessible due to dense understory Structure appears typical for species within current context Unremarkable example of species	C1	3.3

Tree Number	Common Species Name	Trunk Diameter (mm)	Height (m)	Crown Spread (m)					First Significant Branch (m)	Crown Clearance (m)	Life Stage	Physiological Condition	Structural Condition	Comments	BS5837 Category	RPA Radius (m)
				N	E	S	W	Radial								
55	Hornbeam	340#	13					5	1.5	1.5	Early Mature	Average	Indifferent	Structure typical for species within current context Situated on roadside verge Moderate example of species	B12	4.2
56	Sweet Chestnut	3*350 2*200 #	13					4	3	2	Early Mature	Average	Indifferent	Clad and obscured by Ivy, unable to thoroughly inspect Situated on roadside verge Multi stemmed from ground level Structure appears typical for species within current context Moderate example of species	B12	8.1
57	Hybrid Black Poplar	800#	21	5#	9#	13#	6#		1.5	1.25	Early Mature	Average	Indifferent	Surveyed from a distance Previously topped Scaffold structure biased south Prominent within moderate distance views	B2	9.6
58	Cotoneaster	180 2*100 #	6	3#	5	4#	0.5#		1.5	1.75	Semi Mature	Average	Poor	Inaccessible, offsite within neighbouring residential land, unable to thoroughly inspect Unremarkable example of species	C12	2.7
59	Narrow Leaved Ash	120#	6					2	2	2	Semi Mature	Below Average	Indifferent	Minor tip dieback throughout Unremarkable example of species	C12	1.5
60	Narrow Leaved Ash	130#	7					2	2	2	Semi Mature	Below Average	Indifferent	Minor tip dieback throughout Sparse crown for species Unremarkable example of species	C12	1.5
61	Narrow Leaved Ash	130#	7					2.5	2	2	Semi Mature	Below Average	Indifferent	Minor tip dieback throughout Sparse crown for species Unremarkable example of species	C12	1.5
62	Lime	250#	12					3.5	1.5	1.25	Early Mature	Average	Indifferent	Structure appears typical for species within current context Moderate example of species	B1	3
63	Hornbeam	160#	6					2.5	2.5	2.5	Semi Mature	Average	Indifferent	Structure appears typical for species within current context Unremarkable example of species	C12	1.8
64	Hornbeam	160#	5					2	2.5	2	Semi Mature	Average	Indifferent	Structure appears typical for species within current context Unremarkable example of species	C12	1.8

Tree Number	Common Species Name	Trunk Diameter (mm)	Height (m)	Crown Spread (m)					First Significant Branch (m)	Crown Clearance (m)	Life Stage	Physiological Condition	Structural Condition	Comments	BS5837 Category	RPA Radius (m)
				N	E	S	W	Radial								
G1	Ash Buddleia Hawthorn Hornbeam Hybrid Black Poplar Leyland Cypress Sycamore Beech Goat Willow	700# max	23 max					8 max	2 to 8	1.5 to 8	Semi Mature to Early Mature	Average to Below Average	Indifferent to Poor	Limited access due to dense understory Components predominantly clad and obscured by Ivy, unable to thoroughly inspect Occasionally intermittent collection set within railway embankment Individually of low significance, moderate value as collective only	B2	8.4
G2	Ash Cherry Cotoneaster English Oak Sycamore	100 av	5 av					2 av	1 av	1 av	Semi Mature	Average	Indifferent	Parcels of scrub Unremarkable collection	C12	1.2
G3	Goat Willow Sycamore	3*120 av	12 av					4.5 av	1 av	5 av	Semi Mature to Early Mature	Average to Below Average	Indifferent to Poor	Limited access due to dense understory Partially clad and obscured by Bramble Cohesive linear collection Components predominantly display multi stemmed form Occasional dead component within interior Unremarkable collection	C12	2.4
G4	Elder Hawthorn Leyland Cypress Sycamore Alder	370 av	9 av					2.5 av	0.5 av	0.5 av	Semi Mature to Early Mature	Average to Below Average	Indifferent to Poor	Components predominantly clad and obscured by Ivy, unable to thoroughly inspect Maintained on lower canopies to c.4m Unremarkable collection	C12	4.5
G5	Ash English Oak Hawthorn Holly Sycamore Cherry Silver Birch Hazel	600# av	19 av					8 av	2 av	2 av	Semi Mature to Mature	Average to Below Average	Indifferent to Poor	Components predominantly clad and obscured by Ivy, unable to thoroughly inspect Partially clad and obscured by Bramble Offsite collection set within railway embankment Ash components appear to be in decline Occasionally encroaches onto site Occasionally intermittent Individually of low significance, moderate value as collective only	B2	7.2

Tree Number	Common Species Name	Trunk Diameter (mm)	Height (m)	Crown Spread (m) N	E	S	W	Radial	First Significant Branch (m)	Crown Clearance (m)	Life Stage	Physiological Condition	Structural Condition	Comments	BS5837 Category	RPA Radius (m)
G6	Cherry Laurel Elaeagnus Eucalyptus Fig Norway Maple Plum Silver Birch Viburnum Mimosa Box elder Contorted Willow Hazel Weeping Birch Indian Bean Tree Himalayan Birch Cherry Purple Plum	300# av	12 av					5 av	1 av	1 av	Semi Mature to Early Mature	Average to Below Average	Indifferent to Poor	Limited access due to dense understory Components predominantly clad and obscured by Ivy, unable to thoroughly inspect Partially clad and obscured by Bramble Intermittent collection of ornamental plantings and self set scrub Unremarkable collection	C12	3.6
G7	Beech Hornbeam Elm English Oak	300 av	12 av					3.5 av	1 av	1 av	Semi Mature to Early Mature	Average	Indifferent	Liner collection of lapsed ornamental hedgerow components Previously maintained at c.2.5m Occasional self set specimen within Unremarkable collection	C12	3.6
G8	Leyland Cypress	300 av	11 av					4 av	0.5 av	0.5 av	Semi Mature	Average	Indifferent	Components predominantly clad and obscured by Ivy, unable to thoroughly inspect Maintained on lower canopies to c.4m Occasional failed stem within collection Unremarkable collection	C12	3.6
G9	Goat Willow Hybrid Black Poplar	2*750# max	20 av					7 av	1 av	1 av	Semi Mature to Early Mature	Average to Below Average	Indifferent to Poor	Components predominantly clad and obscured by Ivy, unable to thoroughly inspect Partially clad and obscured by Bramble Cohesive collection majoring on Hybrid Black Poplar with self set scrub understory Unremarkable collection	C12	12.6
G10	Ash Buddleia Cherry English Oak Hawthorn Holly Sycamore Silver Birch Hazel Crack Willow	300# av	13 av					4 av	1# av	1# av	Semi Mature to Early Mature	Average to Below Average	Indifferent to Poor	Inaccessible, offsite within adjacent third-party land, unable to thoroughly inspect Structures appear typical for species within current context Majority of group is homogonous in size, structure and life stage Cohesive collection situated on railway embankment Unremarkable collection	C12	3.6

Tree Number	Common Species Name	Trunk Diameter (mm)	Height (m)	Crown Spread (m) N	E	S	W	Radial	First Significant Branch (m)	Crown Clearance (m)	Life Stage	Physiological Condition	Structural Condition	Comments	BS5837 Category	RPA Radius (m)
G11	Blackthorn Buddleia Crack Willow Elder False Acacia Goat Willow Silver Birch	120 av	5 av					3 av	0.5 av	0.5 av	Semi Mature	Average to Below Average	Indifferent	Intermittent collection of scrub Unremarkable collection	C12	1.5
G12	Blackthorn Hawthorn Hazel Hybrid Black Poplar	650 av	22 av					7 av	2 av	1.5 av	Semi Mature to Early Mature	Average	Indifferent to Poor	Limited access due to dense understory Partially clad and obscured by Bramble Mutually suppressed and cohesive forming one single canopy Linear collection of Hybrid Black Poplar with self set understory Majority of components have large cavities with active decay in trunks Collection composed of predominately low value individuals	C12	7.8
G13	Ash	3*350# av	17 max					11 max	2# av	1.5# av	Early Mature	Below Average	Poor	Limited access due to dense understory Components predominantly clad and obscured by Ivy, unable to thoroughly inspect Partially clad and obscured by Bramble Collection of Ash lining site boundary Components appear to be in decline Unremarkable collection	C12	7.2
G14	Ash Blackthorn English Oak Hawthorn Sycamore Bird Cherry	280 170 av	9 max					3.5 av	1.5 av	1.5 av	Semi Mature	Average to Below Average	Indifferent to Poor	Limited access due to dense understory Partially clad and obscured by Bramble Ash components appear to be in decline Occasionally intermittent Unremarkable collection	C12	3.9
G15	Elder Hawthorn Hybrid Black Poplar	450 av	16 av					4 av	2.5 av	2 av	Semi Mature to Early Mature	Average to Below Average	Indifferent to Poor	Limited access due to dense understory Components predominantly clad and obscured by Ivy, unable to thoroughly inspect Partially clad and obscured by Bramble Linear collection of Hybrid Black Poplar with self set scrub understory Majority of Hybrid Black Poplar components have large cavities within extensive decay within trunks	U	N/A
G16	Ash Elder Field Maple Hazel Holly	5*250# max	9 av					6 av	0.5 av	0.5 av	Semi Mature to Early Mature	Average	Indifferent	Limited access due to dense understory Components predominantly clad and obscured by Ivy, unable to thoroughly inspect Cohesive collection lining site boundary Individually of low significance, moderate value as collective only	B2	6.6

Tree Number	Common Species Name	Trunk Diameter (mm)	Height (m)	Crown Spread (m)					First Significant Branch (m)	Crown Clearance (m)	Life Stage	Physiological Condition	Structural Condition	Comments	BS5837 Category	RPA Radius (m)
				N	E	S	W	Radial								
G17	Ash Blackthorn Corkscrew Willow Crack Willow False Acacia Hazel Holly Osier Willow	200 av	9.5 av					3 av	1.5 av	2 av	Semi Mature to Early Mature	Average to Below Average	Indifferent to Poor	Linear collection lining internal access track Occasional failed component within interior Unremarkable collection	C12	2.4
G18	Ash English Oak Hawthorn Hybrid Black Poplar Sycamore	500 av	22 av					7.5 av	2 av	2 av	Semi Mature to Early Mature	Average to Below Average	Indifferent to Poor	Limited access due to dense understory Components predominantly clad and obscured by Ivy, unable to thoroughly inspect Partially clad and obscured by Bramble Linear collection of Hybrid Black Poplars with self set scrub understory Majority of collection appear to have been previously managed in height at c.3m Majority of Hybrid Black Poplar components have large cavities with active decay within trunks Occasional failed component within collection Unremarkable collection	C12	6
G19	Blackthorn Hawthorn Hazel Holly Hybrid Black Poplar	500# av	12 av					3.5 av	2# av	2 av	Semi Mature to Early Mature	Average to Below Average	Indifferent to Poor	Limited access due to dense understory Components predominantly clad and obscured by Ivy, unable to thoroughly inspect Partially clad and obscured by Bramble Linear collection of Hybrid Black Poplars with self set scrub understory Previously maintained in height at c.4 m Majority of Hybrid Black Poplar components have large cavities with active decay within trunks Provides dense boundary screen Unremarkable collection	C12	6
G20	Elder Hawthorn Hybrid Black Poplar	700 av	22 av					8 av	3.5 av	3 av	Early Mature	Average to Below Average	Indifferent to Poor	Offsite collection of Hybrid Black Poplars with self set scrub understory Limited access due to dense understory Components predominantly clad and obscured by Ivy, unable to thoroughly inspect Partially clad and obscured by Bramble Collection lining internal field boundary Structures appear typical for species within current context Mutually suppressed and cohesive forming one single canopy Occasional standing dead within interior Individually of low significance, moderate value as collective only	B2	8.4

Tree Number	Common Species Name	Trunk Diameter (mm)	Height (m)	Crown Spread (m) N	E	S	W	Radial	First Significant Branch (m)	Crown Clearance (m)	Life Stage	Physiological Condition	Structural Condition	Comments	BS5837 Category	RPA Radius (m)
G21	Ash Elder Hawthorn Holly Sweet Chestnut Rowan Silver Birch Cherry Sycamore	200 av	10 av					4 av	2 av	1 av	Young to Semi Mature	Average to Below Average	Indifferent to Poor	Limited access due to dense understory Components predominantly clad and obscured by Ivy, unable to thoroughly inspect Partially clad and obscured by Bramble Occasionally intermittent collection of self set specimens and scrub Occasional failed component within interior Unremarkable collection	C12	2.4
G22	Apple Cherry False Acacia Hawthorn Purple Plum Silver Birch Box Elder	120 av	2 to 9					2 av	1 av	1 av	Young to Semi Mature	Average to Below Average	Indifferent to Poor	Collection of ornamental plantings with occasional self set specimen Unremarkable collection	C12	1.5
G23	Goat Willow Hybrid Black Poplar	75 av	7 av					4 av	0.5 av	0.5 av	Young to Semi Mature	Average	Indifferent	Intermittent parcels of scrub Components predominantly clad and obscured by Ivy, unable to thoroughly inspect Partially clad and obscured by Bramble Structures appear typical for species within current context Unremarkable collection	C12	0.9
G24	Ash Crack Willow False Acacia Norway Maple Sycamore Sweet Chestnut Silver Birch	300 av	13 av					5 av	2 av	2 av	Semi Mature to Early Mature	Average to Below Average	Indifferent to Poor	Limited access due to dense understory Partially clad and obscured by Bramble Intermittent collection of likely self set specimens Occasional failed component within interior Unremarkable collection	C12	3.6
G25	Hybrid Black Poplar Leyland Cypress	350 av	20 av					4 av	5 av	6 av	Semi Mature to Early Mature	Average to Below Average	Indifferent to Poor	Limited access due to dense understory Components predominantly clad and obscured by Ivy, unable to thoroughly inspect Partially clad and obscured by Bramble Cohesive collection majoring on Hybrid Black Poplar Individually of low significance, moderate value as collective only	B2	4.2
G26	Alder Goat Willow	200 av	12 av					4 av	1 av	1 av	Semi Mature	Average	Indifferent	Limited access due to dense understory Structures appear typical for species within current context Linear collection of Alder with occasional self set Goat Willow Unremarkable collection	C12	2.4

Tree Number	Common Species Name	Trunk Diameter (mm)	Height (m)	Crown Spread (m)					First Significant Branch (m)	Crown Clearance (m)	Life Stage	Physiological Condition	Structural Condition	Comments	BS5837 Category	RPA Radius (m)
				N	E	S	W	Radial								
G27	Ash Cherry Laurel Elm English Oak Hawthorn Hazel Norway Maple Sycamore Pittosporum	250 av	12 av					4 av	1.5 av	1.5 av	Semi Mature	Average to Below Average	Indifferent to Poor	Limited access due to dense understory Components predominantly clad and obscured by Ivy, unable to thoroughly inspect Partially clad and obscured by Bramble Occasionally intermittent collection lining PROW Occasional dead component within Unremarkable collection	C12	3
G28	Cherry Elm English Oak Field Maple Hawthorn Hazel Holly Norway Maple 'Crimson king'	650 av	20 av					8 av	3 av	4 av	Semi Mature to Mature	Average	Indifferent to Poor	Limited access due to dense understory Structures appear typical for species within current context Canopies are mutually cohesive Cohesive collection lining both sides of PROW Self set scrub understory High value collection	A2	7.8
G29	Leyland Cypress	450 av	16 av					6 av	0.5 av	0.5 av	Semi Mature to Early Mature	Average to Below Average	Indifferent to Poor	Structures appear typical for species within current context Previously managed in height Maintained on lower canopies to c.4m Limited access due to lower crowns Unremarkable collection	C12	5.4
G30	Ash Apple Cherry Crack Willow Elder Elaeagnus English Oak False Acacia Goat Willow Lonicera Photinia Strawberry Tree Sycamore Silver Birch Viburnum Cherry Laurel Broom Holly Cotoneaster Berberis Buddleia	150# av	9 av					3 av	0.5 av	0.5 av	Young to Semi Mature	Average	Indifferent	Limited access due to dense understory Components predominantly clad and obscured by Ivy, unable to thoroughly inspect Partially clad and obscured by Bramble Area of colonising scrub with occasional ornamental planting Unremarkable collection	C12	1.8

Tree Number	Common Species Name	Trunk Diameter (mm)	Height (m)	Crown Spread (m) N	E	S	W	Radial	First Significant Branch (m)	Crown Clearance (m)	Life Stage	Physiological Condition	Structural Condition	Comments	BS5837 Category	RPA Radius (m)
G31	Elm False Acacia Field Maple Hawthorn Hazel Honey Locust Himalayan Birch Norway Maple Pear Sycamore Silver Birch	2*200 av	14 av					5 av	1.5 av	2 av	Semi Mature to Early Mature	Average to Below Average	Indifferent to Poor	Limited access due to dense understory Partially clad and obscured by Bramble Earth removal works to western aspect of group, likely to have impacted roots Unremarkable collection	C12	3.3
G32	Crack Willow Goat Willow Osier Willow Sycamore Silver Birch Holly Hawthorn	100 av	13 max					3 av	0.5 av	0.5 av	Semi Mature	Average	Indifferent	Limited access due to dense understory Components predominantly clad and obscured by Ivy, unable to thoroughly inspect Partially clad and obscured by Bramble Area of dense scrub Unremarkable collection	C12	1.2
G33	Field Maple Hawthorn Hybrid Black Poplar Sycamore	600 av	22 av					8 av	2 av	1.5 av	Semi Mature to Early Mature	Average	Poor	Limited access due to dense understory Components predominantly clad and obscured by Ivy, unable to thoroughly inspect Partially clad and obscured by Bramble Linear collection of Hybrid Black Poplar lining PROW Previously maintained in height at c.4m Majority of components have large cavities with active decay within trunks Crowns interfering with overhead utilities to north Collection composed of predominately low value individuals	C12	7.2
G34	Field Maple Hazel Silver Birch	75 av	3 av					2 av	0.5 av	0.5 av	Young	Average	Indifferent	Intermittent collection of scrub Unremarkable collection	C12	0.9
G35	Buddleia Elder Honey Locust Horse Chestnut Leyland Cypress Mahonia Bamboo	120 av	6 av					2 av	0.5 av	0.5 av	Semi Mature	Average to Below Average	Indifferent to Poor	Unmaintained collection lining property boundary Unremarkable collection	C12	1.5
G36	Buddleia Elder English Oak Pyracantha Sycamore	4*90 av	7 av					2 av	0.5 av	0.5 av	Semi Mature	Average	Indifferent	Intermittent scrub collection Unremarkable collection	C12	2.1

Tree Number	Common Species Name	Trunk Diameter (mm)	Height (m)	Crown Spread (m) N	E	S	W	Radial	First Significant Branch (m)	Crown Clearance (m)	Life Stage	Physiological Condition	Structural Condition	Comments	BS5837 Category	RPA Radius (m)
G37	Beech Elaeagnus Hawthorn Hazel Holly Hornbeam Horse Chestnut Mahonia Pyracantha Sycamore Silver Birch Viburnum Berberis Camelia	75 av	4 av					1.5 av	0.5 av	0.5 av	Semi Mature	Average	Indifferent	Offsite collection of established ornamental scrub Occasional larger specimen within Unremarkable collection	C12	0.9
G38	Hybrid Black Poplar	500# av	21 av					8 av	6# av	6# av	Early Mature	Average	Indifferent	Inaccessible, offsite within neighbouring residential land, unable to thoroughly inspect 2no Hybrid Black Poplars, crowns are mutually suppressed and cohesive Moderate collective value	B2	6
G39	Sycamore Hawthorn Blackthorn Ash	150# av 300# max	3 av 9 max					3 av	0.5 av	0.5 av	Young to Early Mature	Average	Indifferent	Stems inaccessible due to dense understory Cohesive collection of scrub and occasional established Sycamore within Unremarkable collection	C12	1.8 av 3.6 max

Tree Number	Common Species Name	Trunk Diameter (mm)	Height (m)	Crown Spread (m)					First Significant Branch (m)	Crown Clearance (m)	Life Stage	Physiological Condition	Structural Condition	Comments	BS5837 Category	RPA Radius (m)
				N	E	S	W	Radial								
H1	Blackthorn Cherry Cherry Plum English Oak Goat Willow Hawthorn Holly Rowan Viburnum Cotoneaster Holm Oak Berberis	75 av	2 to 6					2 av	0.5 av	0.5 av	Semi Mature	Average	Indifferent	Partially maintained internal hedgerow Occasional self set larger specimen within Unremarkable collection	C12	0.9
H2	Alder Crack Willow False Acacia Field Maple Goat Willow Hazel Lonicera Silver Birch	75 av	5 av					3 av	0.5 av	0.5 av	Young to Semi Mature	Average to Below Average	Indifferent to Poor	Unmaintained boundary hedgerow Unremarkable collection	C12	0.9
H3	Blackthorn Cherry English Oak Field Maple Hawthorn Hazel Larch Rowan Silver Birch Lime	75 av	6 av					3 av	0.5 av	0 5 av	Young to Semi Mature	Average to Below Average	Indifferent to Poor	Components predominantly clad and obscured by Ivy, unable to thoroughly inspect Partially clad and obscured by Bramble Unmaintained hedgerow lining site boundary Inaccessible due to boundary fence Provides partial screening of adjacent dwellings Occasionally intermittent Unremarkable collection	C12	0.9
H4	Leyland Cypress	140# av	4 av					1.5 av	0.5 av	0.5 av	Semi Mature	Average to Below Average	Indifferent	Components predominantly clad and obscured by Ivy, unable to thoroughly inspect Previously maintained hedgerow Occasional component partially dead Unremarkable collection	C12	1.8

APPENDIX D

TREE CONSTRAINTS PLAN (12072 TCP 01)

1:2500 @ A3

0m 20m 40m 100m

KEY:

- Site Boundary
- 15 Tree Numbers
- Tree Canopies
- [8] Category 'U' Trees
- Category 'A' RPA
- Category 'B' RPA
- Category 'C' RPA
- Shading Arc

Note: Trees 1, 16, 17, 23, 32, 36-39, 41, 42, Groups G1-G3, G5-G7, G10, G11, G14, G16, G17, G19-G21, G23-G27, G30, G32-G34 and Hedgerows H1-H3 have been plotted using measurements onsite in conjunction with aerial imagery. Their locations were not recorded on the topographical survey of the site.

Note: The RPA footprint for Trees 48, 52, 55 & 56 have been displaced to allow for the effect of the adopted highway. The surface area of the RPA has not been reduced.

REV	DATE	NOTE	Drawn	Chk'd

REVISIONS

aspect arboriculture

TITLE

New Place Farm, Pulborough
Tree Constraints Plan

CLIENT

David Wilson Homes, Southern Counties

SCALE	DATE	DRAWN
1:2500 @ A3	APR 2024	GW

DRAWING NUMBER	REVISION
12072 TCP 01 (Overview)	

Based on: S1572-02-03-04.dwg

1:1000 @ A3

0m 10m 20m 40m

KEY:

- Site Boundary
- 15 Tree Numbers
- Tree Canopies
- [8] Category 'U' Trees
- Category 'A' RPA
- Category 'B' RPA
- Category 'C' RPA
- Shading Arc

Note: Trees 1, 16, 17, 23, 32, 36-39, 41, 42, Groups G1-G3, G5-G7, G10, G11, G14, G16, G17, G19-G21, G23-G27, G30, G32-G34 and Hedgerows H1-H3 have been plotted using measurements onsite in conjunction with aerial imagery. Their locations were not recorded on the topographical survey of the site.

Note: The RPA footprint for Trees 48, 52, 55 & 56 have been displaced to allow for the effect of the adopted highway. The surface area of the RPA has not been reduced.

REV	DATE	NOTE	Drawn	Chk'd

REVISIONS

aspect arboriculture

TITLE

New Place Farm, Pulborough
Tree Constraints Plan

CLIENT

David Wilson Homes, Southern Counties

SCALE	DATE	DRAWN
1:1000 @ A3	APR 2024	GW

DRAWING NUMBER	REVISION
12072 TCP 01 (1/5)	

Based on: S1572-02-03-04.dwg

1:1000 @ A3

0m 10m 20m 40m

KEY:

- Site Boundary
- 15 Tree Numbers
- Tree Canopies
- [8] Category 'U' Trees
- Category 'A' RPA
- Category 'B' RPA
- Category 'C' RPA
- Shading Arc

Note: Trees 1, 16, 17, 23, 32, 36-39, 41, 42, Groups G1-G3, G5-G7, G10, G11, G14, G16, G17, G19-G21, G23-G27, G30, G32-G34 and Hedgerows H1-H3 have been plotted using measurements onsite in conjunction with aerial imagery. Their locations were not recorded on the topographical survey of the site.

Note: The RPA footprint for Trees 48, 52, 55 & 56 have been displaced to allow for the effect of the adopted highway. The surface area of the RPA has not been reduced.

Crown Boundary Copyright Cyclomedia

REV	DATE	NOTE	Drawn	Chk'd

REVISIONS

aspect arboriculture

TITLE

New Place Farm, Pulborough
Tree Constraints Plan

CLIENT

David Wilson Homes, Southern Counties

SCALE	DATE	DRAWN
1:1000 @ A3	APR 2024	GW

DRAWING NUMBER	REVISION
12072 TCP 01 (2/5)	

Based on: S1572-02-03-04.dwg

1:1000 @ A3

0m 10m 20m 40m

KEY:

- Site Boundary
- 15 Tree Numbers
- Tree Canopies
- [8] Category 'U' Trees
- Category 'A' RPA
- Category 'B' RPA
- Category 'C' RPA
- Shading Arc

Note: Trees 1, 16, 17, 23, 32, 36-39, 41, 42, Groups G1-G3, G5-G7, G10, G11, G14, G16, G17, G19-G21, G23-G27, G30, G32-G34 and Hedgerows H1-H3 have been plotted using measurements onsite in conjunction with aerial imagery. Their locations were not recorded on the topographical survey of the site.

Note: The RPA footprint for Trees 48, 52, 55 & 56 have been displaced to allow for the effect of the adopted highway. The surface area of the RPA has not been reduced.

REV	DATE	NOTE	Drawn	Chk'd

REVISIONS

aspect arboriculture

TITLE

New Place Farm, Pulborough
Tree Constraints Plan

CLIENT

David Wilson Homes, Southern Counties

SCALE	DATE	DRAWN
1:1000 @ A3	APR 2024	GW

DRAWING NUMBER	REVISION
12072 TCP 01 (3/5)	

Based on: S1572-02-03-04.dwg

1:1000 @ A3

0m 10m 20m 40m

KEY:

- Site Boundary
- 15 Tree Numbers
- Tree Canopies
- [8] Category 'U' Trees
- Category 'A' RPA
- Category 'B' RPA
- Category 'C' RPA
- Shading Arc

Note: Trees 1, 16, 17, 23, 32, 36-39, 41, 42, Groups G1-G3, G5-G7, G10, G11, G14, G16, G17, G19-G21, G23-G27, G30, G32-G34 and Hedgerows H1-H3 have been plotted using measurements onsite in conjunction with aerial imagery. Their locations were not recorded on the topographical survey of the site.

Note: The RPA footprint for Trees 48, 52, 55 & 56 have been displaced to allow for the effect of the adopted highway. The surface area of the RPA has not been reduced.

REV	DATE	NOTE	Drawn	Chk'd

REVISIONS

aspect arboriculture

TITLE

New Place Farm, Pulborough
Tree Constraints Plan

CLIENT

David Wilson Homes, Southern Counties

SCALE	DATE	DRAWN
1:1000 @ A3	APR 2024	GW

DRAWING NUMBER	REVISION
12072 TCP 01 (4/5)	

Based on: S1572-02-03-04.dwg

1:1000 @ A3

0m 10m 20m 40m

KEY:

- Site Boundary
- 15 Tree Numbers
- Tree Canopies
- [8] Category 'U' Trees
- Category 'A' RPA
- Category 'B' RPA
- Category 'C' RPA
- Shading Arc

Note: Trees 1, 16, 17, 23, 32, 36-39, 41, 42, Groups G1-G3, G5-G7, G10, G11, G14, G16, G17, G19-G21, G23-G27, G30, G32-G34 and Hedgerows H1-H3 have been plotted using measurements onsite in conjunction with aerial imagery. Their locations were not recorded on the topographical survey of the site.

Note: The RPA footprint for Trees 48, 52, 55 & 56 have been displaced to allow for the effect of the adopted highway. The surface area of the RPA has not been reduced.

REV	DATE	NOTE	Drawn	Chk'd

REVISIONS

aspect arboriculture

TITLE

New Place Farm, Pulborough
Tree Constraints Plan

CLIENT

David Wilson Homes, Southern Counties

SCALE	DATE	DRAWN
1:1000 @ A3	APR 2024	GW

DRAWING NUMBER	REVISION
12072 TCP 01 (5/5)	

Based on: S1572-02-03-04.dwg

APPENDIX E

TREE PROTECTION BARRIER SPECIFICATION

Recommended Tree Protection Fencing Specification for this Development

(Source: BS 5837: 2012)

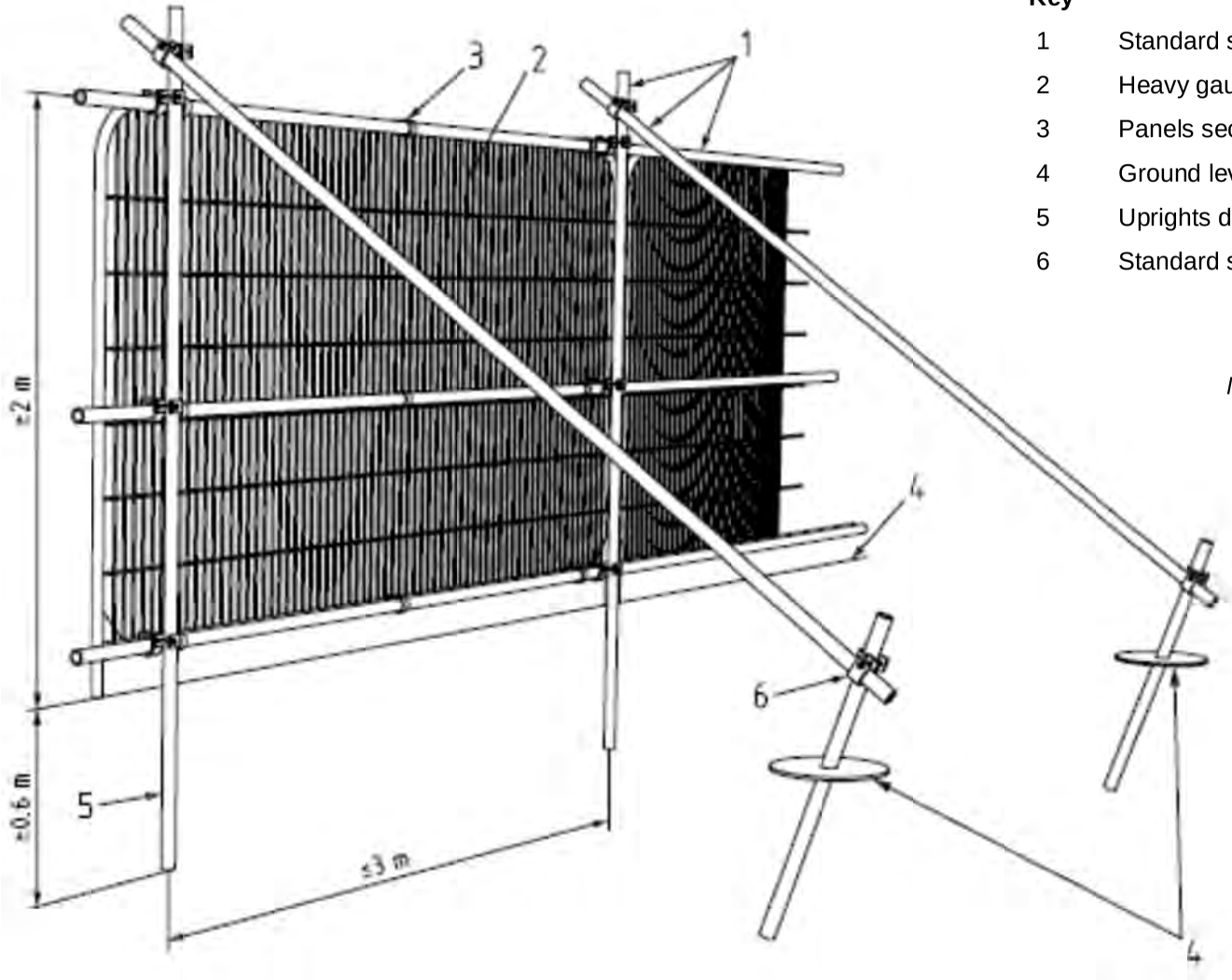

Key

1	Standard scaffold poles
2	Heavy gauge 2m tall galvanized tube and welded mesh infill panels
3	Panels secured to uprights and cross-members with wire ties
4	Ground level
5	Uprights driven into the ground until secure (minimum depth 0.6m)
6	Standard scaffold clamps

Notes:

- *Supports are to be sited tree side of the panel front face.*
- *All weather notices should be attached to every fourth panel highlighting the importance of the barrier in its correct position. An example is provided overleaf which may be duplicated for use on this development.*

aspect arboriculture

Tree Protection Barrier Specification

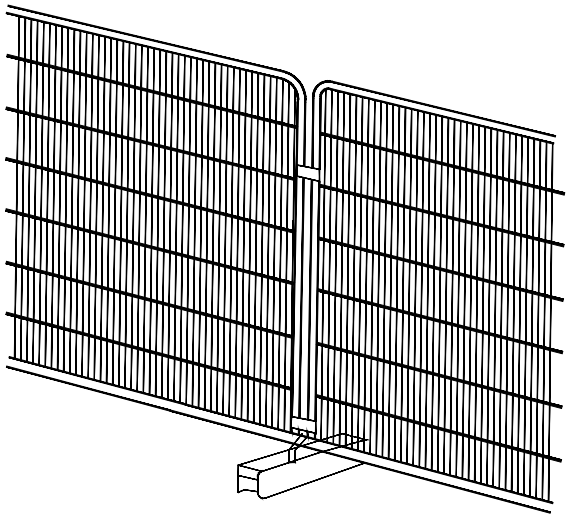

Heras panels supported with pinned rubber feet and driven 100x100mm timber posts on every second panel.

aspect arboriculture

TREE PROTECTION BARRIER

- **DO NOT MOVE THIS FENCE**
- **NO SITE ACTIVITY TREE SIDE OF FENCE**
- **NO STORAGE TREE SIDE OF FENCE**

- **For assistance call Aspect Arboriculture: 01295 276066**

aspect arboriculture

landscape planning • ecology • arboriculture

aspect

Aspect Arboriculture Ltd
South Court
Hardwick Business Park
Noral Way
Banbury
Oxfordshire OX16 2AF

T: 01295 276066
F: 01295 265072
E: info@aspect-arbor.com
W: www.aspect-arbor.com